Table of Content

PAGE	COMPONENT/ FUNCTION
001	INDEX
002	BLOCK_DIAGRAM
003	POWER SWITCH AND LDO
004	COMMUNICATION
005	CURRENT_SOURCE
006	SWITCHING
007	MOUNTING

History

VERSION	DISCRIPTION
1.0.0	INITIAL PROJECT
1.1.0	REPLACE SWITCHING OBJECT
1.2.0	ADD HOLES (CENTER OF SIDES)
1.2.1	CHANGE ADG1414 CATEGORY
1.3.0	CHANGE TO HIGHSIDE CURRENT SOURCE
100	LASER INTERNAL AND EXTERNAL IN A BOARD

SpaceLinTech

Project: SATELLITE-4U-LASER-INT-EXT	Subsystem: *	
Design by: Duy Nguyen	Sheet title: 1_INDEX.SchDoc	Sheet 1 of 7
Checked by: Bao Bui	Document No: 1	Size: A3
Approved by: Vu Pham	Revision: *	Date: 30-Apr-26

Project: SATELLITE-4U-LASER-INTERSAT	Subsystem: *	
Design by: Duy Nguyen	Sheet title: 2_BLOCK_DIAGRAM.SchDoc	Sheet 2 of 7
Checked by: Bao Bui	Document No: 2	Size: A3
Approved by: Vu Pham	Revision: *	Date: 30-Apr-26

POWER SWITCH AND LDO

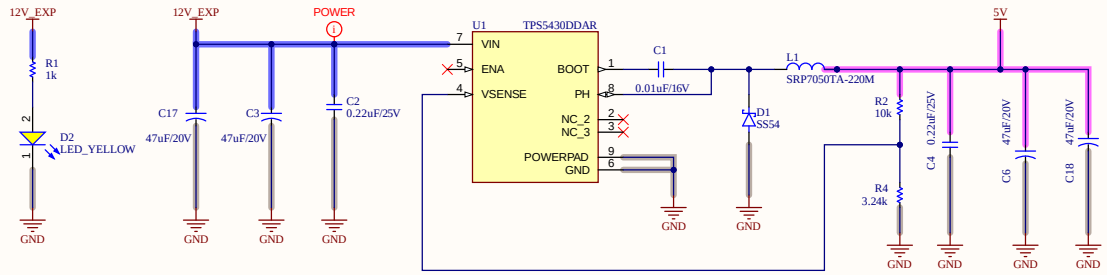

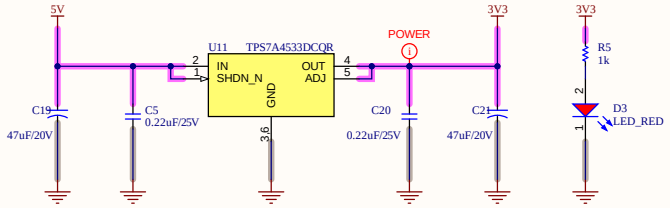

Project: SATELLITE-4U-LASER-INTERSAT	Subsystem: *	
Design by: Duy Nguyen	Sheet title: 3_POWER SWITCH AND LDO.SchDoc	Sheet 3 of 7
Checked by: Bao Bui	Document No: 3	Size: A3
Approved by: Vu Pham	Revision: *	Date: 30-Apr-26

BOARD TO BOARD CONNECTOR TO EXP BOARD

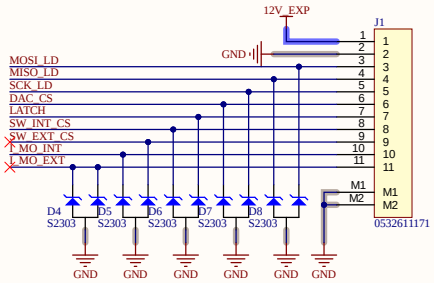

Molex - 0532611171

- ELECTRICAL:
  CURRENT RATING: 1A/CONTACT
  VOLTAGE RATING: 125V/CONTACT
- ENVIRONMENTAL:
  TEMPERATURE RANGE: -40°C TO +105°C
- PHYSICAL:
  PITCH-MATING: 0.049" (1.25mm)
- WIRE:
  WIRE SIZE: 24 AWG
  MAX CURRENT: 1A per Wire
  ISULATION MATERIAL: PTFE
- MATING:
  Molex - 0510211100

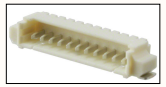

- MATING -

0510211100

LASER EXT CONNECTOR

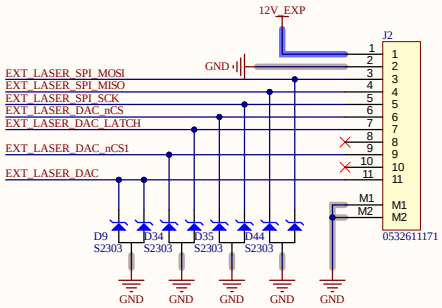

Molex - 0532610871

- ELECTRICAL:
  CURRENT RATING: 1A/CONTACT
  VOLTAGE RATING: 125V/CONTACT
- ENVIRONMENTAL:
  TEMPERATURE RANGE: -40°C TO +105°C
- PHYSICAL:
  PITCH-MATING: 0.049" (1.25mm)
- WIRE:
  WIRE SIZE: 24 AWG
  MAX CURRENT: 1A per Wire
  ISULATION MATERIAL: PTFE
- MATING:
  Molex - 0510210800

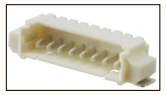

- MATING -

0510210800

BOARD TO BOARD CONNECTOR

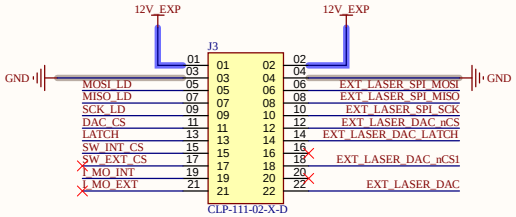

SpaceCiinTech

Project: SATELLITE-4U-LASER-INT-EXT		Subsystem: *	
Design by: Duy Nguyen	Sheet title: 4_COMMUNICATION.SchDoc	Sheet 4 of 7	
Checked by: Bao Bui	Document No: 4	Size: A3	
Approved by: Vu Pham	Revision: *	Date: 30-Apr-26	

DAC FOR INT

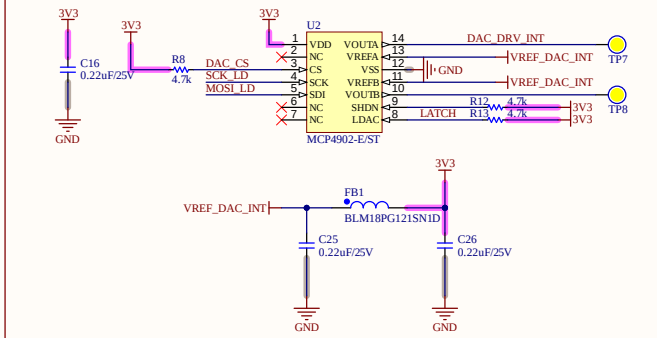

DRIVER_INT

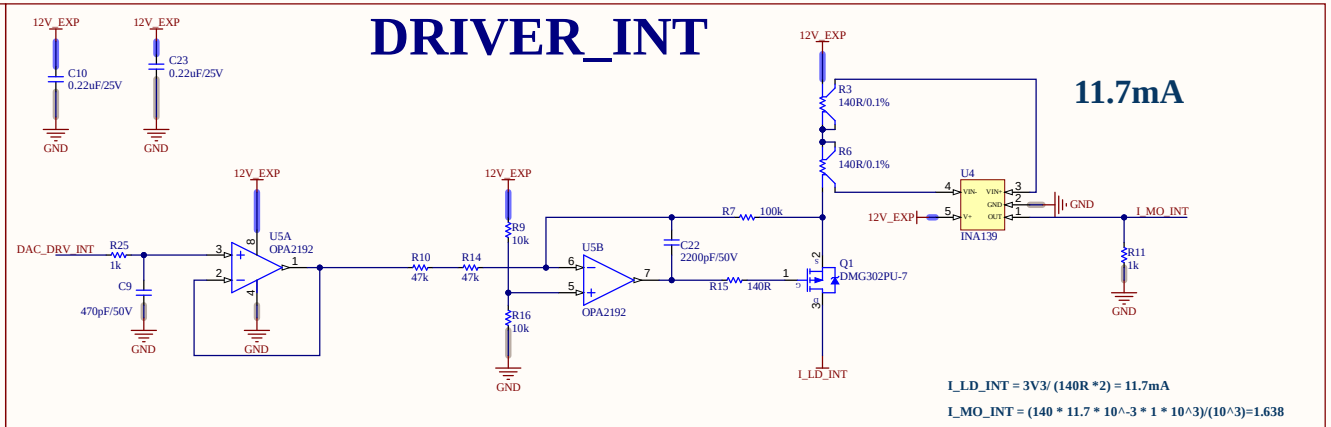

DAC FOR EXT

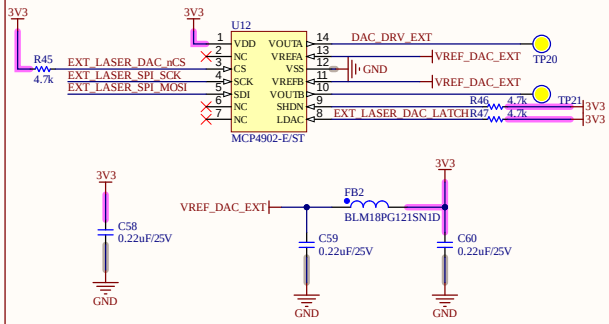

DRIVER_EXT

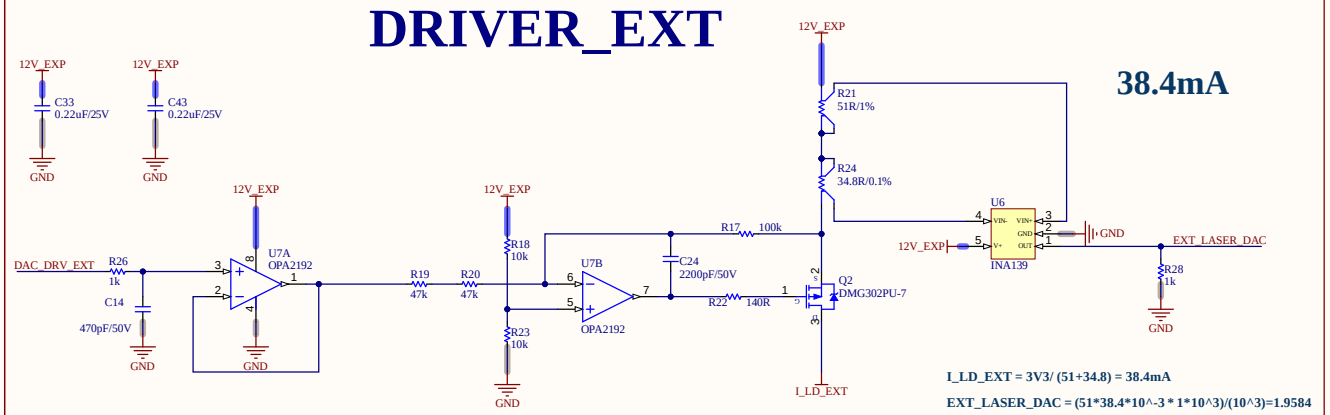

Project: SATELLITE-4U-LASER-INT-EXT	Sub-system: *	
Design by: Duy Nguyen	Sheet title: 5_CURRENT_SOURCE.SchDoc	Sheet 5 of 7
Checked by: Bao Bui	Document No: 5	Size: A3
Approved by: Vu Pham	Revision: *	Date: 30-Apr-26

SWITCHING FOR INT

SWITCHING FOR EXT

MOSI

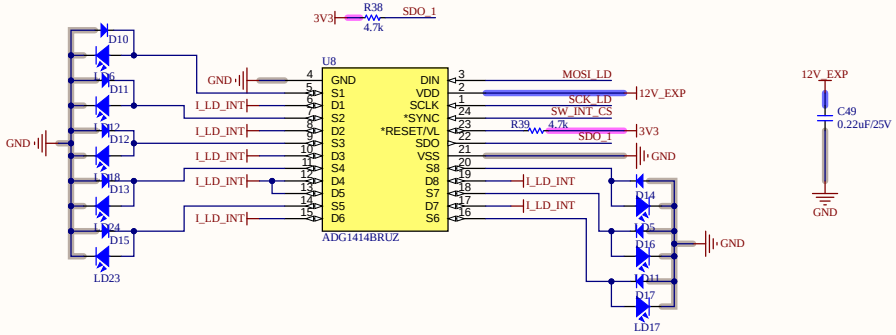

SDO_1

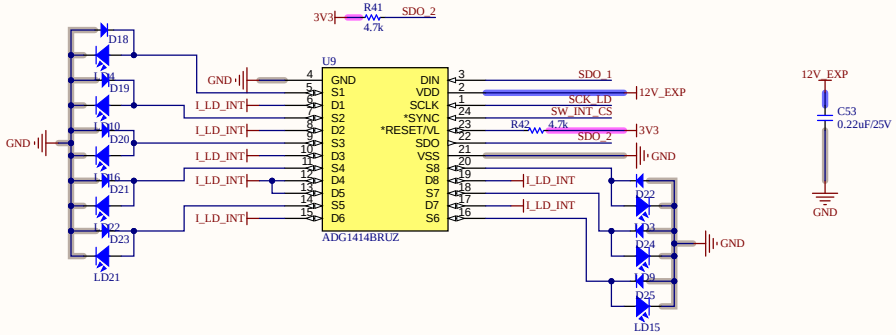

SDO_2

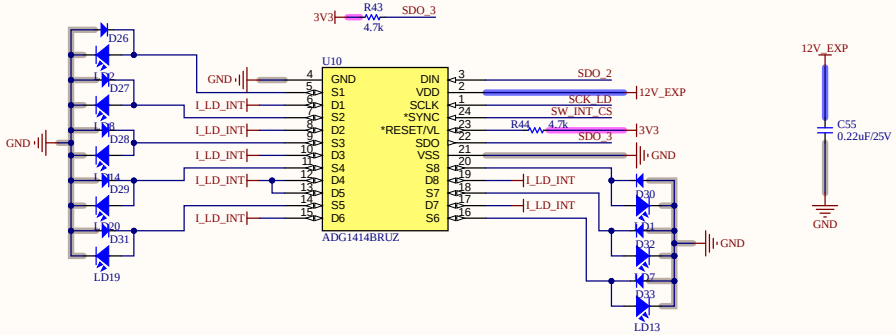

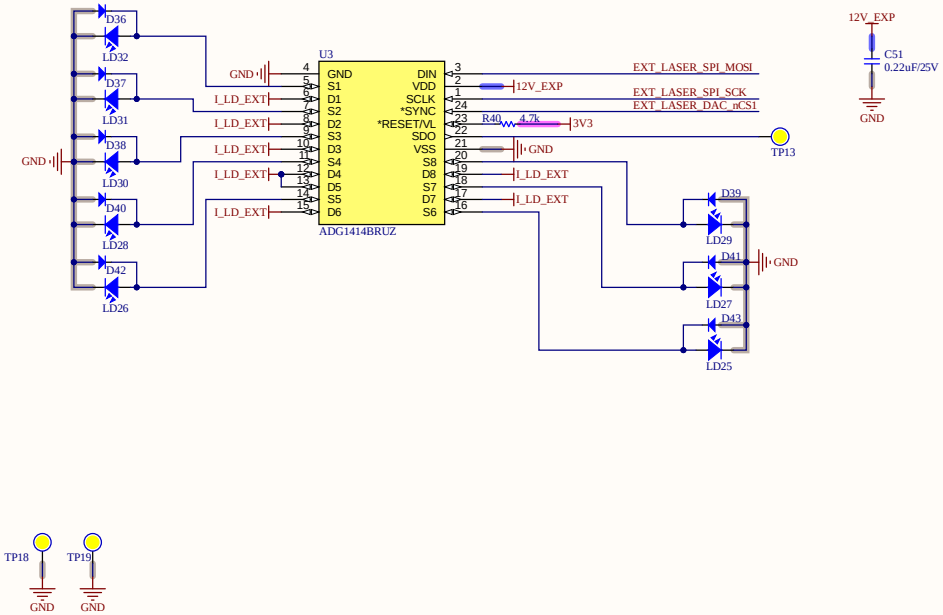

Project: SATELLITE-4U-LASER-INT-EXT	Subsystem: *	
Design by: Duy Nguyen	Sheet title: 6_SWITCHING.SchDoc	Sheet 6 of 7
Checked by: Bao Bui	Document No: 6	Size: A3
Approved by: Vu Pham	Revision: *	Date: 30-Apr-26

MOUNTING HOLE

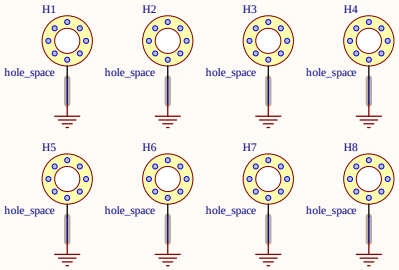

Project: SATELLITE-4U-LASER-INTERSAT	Subsystem: *	
Design by: Duy Nguyen	Sheet title: MOUNTING.SchDoc	Sheet 7 of 7
Checked by: Bao Bui	Document No: 7	Size: A3
Approved by: Vu Pham	Revision: *	Date: 30-Apr-26

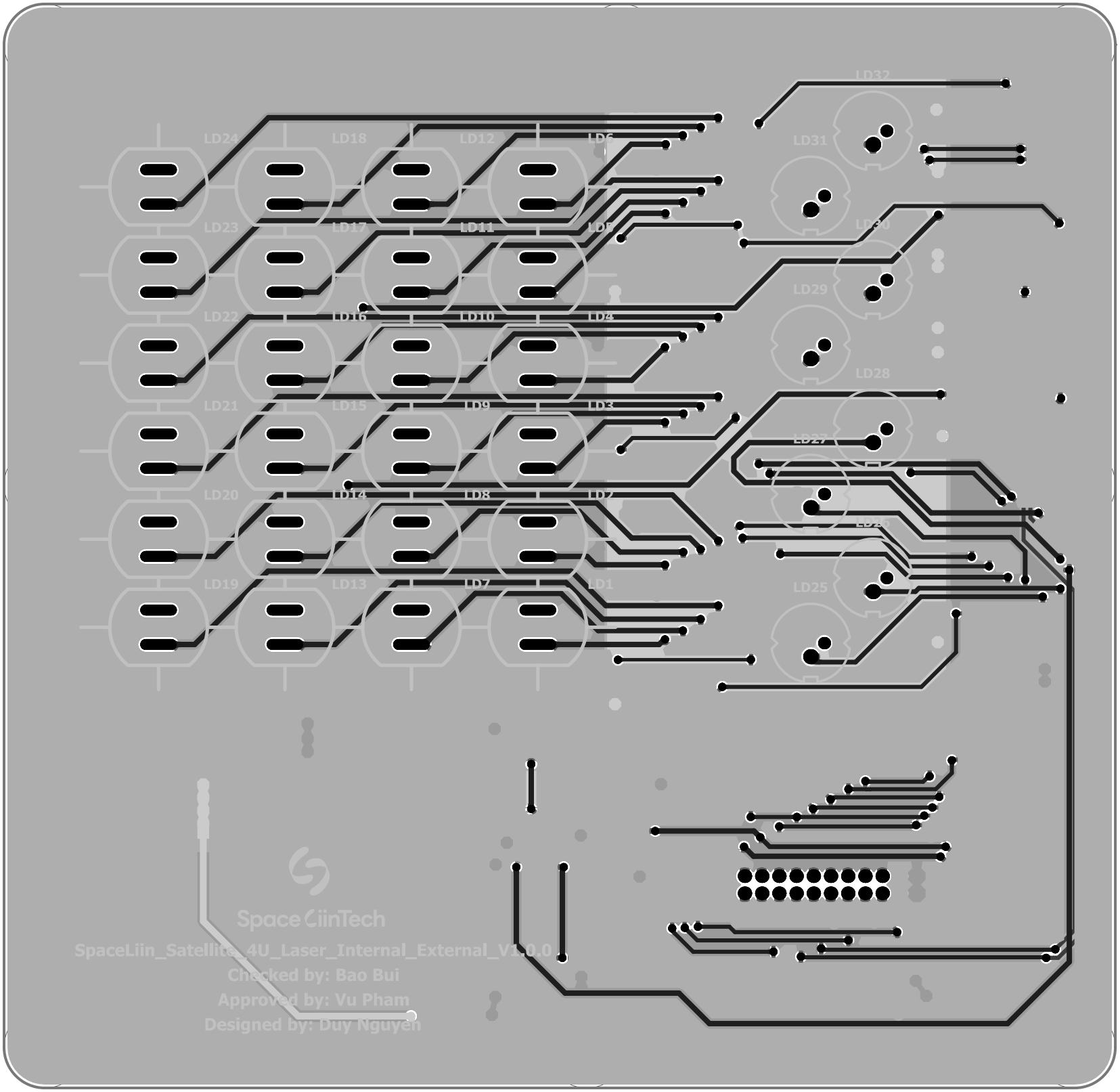
LD32
LD24
LD18
LD12
LD6
LD31
LD23
LD17
LD11
LD5
LD30
LD29
LD22
LD16
LD10
LD4
LD28
LD21
LD15
LD9
LD3
LD27
LD20
LD14
LD8
LD2
LD26
LD19
LD13
LD7
LD1
LD25
SpaceLiinTech
SpaceLiin_Satellite_4U_Laser_Internal_External_V1.0.0
Checked by: Bao Bui
Approved by: Vu Pham
Designed by: Duy Nguyen