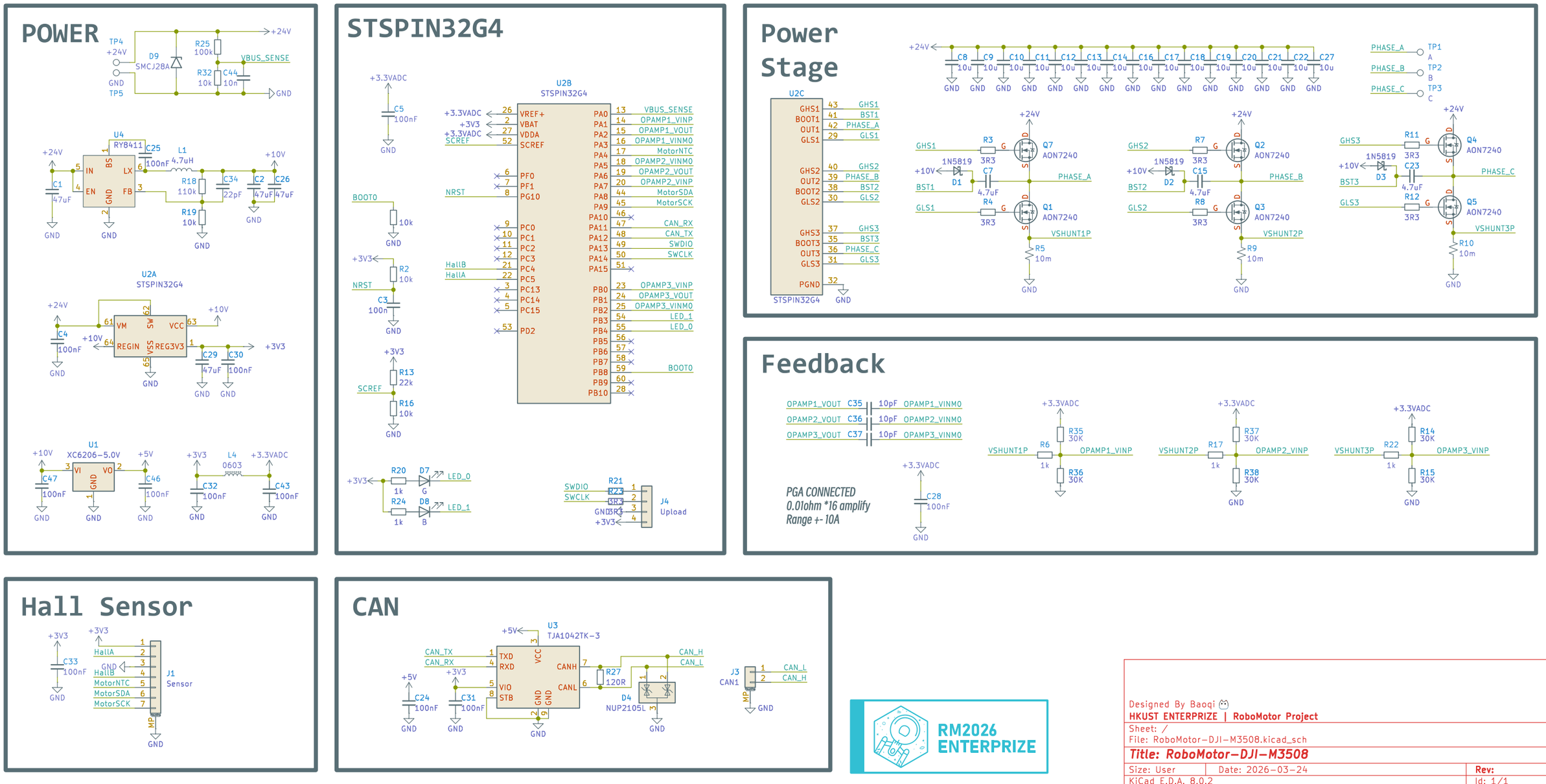
POWER
TP4
+24V
GND
TP5
D9
SMCJ28A
R25
100k
R32
10k
C44
10n
VBUS_SENSE
U4
RY8411
C25
100nF
L1
4.7uH
R18
110k
R19
10k
C34
22pF
C2
47uF
C26
47uF
C1
47uF
+10V
U2A
STSPIN32G4
VM
SW
VCC
REGIN
VSS
REG3V3
C4
100nF
C29
47uF
C30
100nF
+3V3
U1
XC6206-5.0V
VI
VO
C47
100nF
C46
100nF
+5V
L4
0603
+3.3VADC
C32
100nF
C43
100nF
STSPIN32G4
U2B
STSPIN32G4
C5
100nF
VREF+
VBAT
VDDA
SCREF
PF0
PF1
PG10
PC0
PC1
PC2
PC3
PC4
PC5
PC13
PC14
PC15
PD2
PA0
PA1
PA2
PA3
PA4
PA5
PA6
PA7
PA8
PA9
PA10
PA11
PA12
PA13
PA14
PA15
PB0
PB1
PB2
PB3
PB4
PB5
PB6
PB7
PB8
PB9
PB10
VBUS_SENSE
OPAMP1_VINP
OPAMP1_VOUT
OPAMP1_VINM0
MotorNTC
OPAMP2_VINM0
OPAMP2_VOUT
OPAMP2_VINP
MotorSDA
MotorSCK
CAN_RX
CAN_TX
SWDIO
SWCLK
OPAMP3_VINP
OPAMP3_VOUT
OPAMP3_VINM0
LED_1
LED_0
BOOT0
NRST
HallB
HallA
R2
10k
C3
100n
R13
22k
R16
10k
R20
1k
D7
LED_0
R24
1k
D8
LED_1
R21
R23
3R3
J4
Upload
Power Stage
U2C
STSPIN32G4
GHS1
BOOT1
OUT1
GLS1
GHS2
OUT2
BOOT2
GLS2
GHS3
BOOT3
OUT3
GLS3
PGND
BST1
PHASE_A
BST2
PHASE_B
BST3
PHASE_C
C8
C9
C10
C11
C12
C13
C14
C16
C17
C18
C19
C20
C21
C22
C27
10u
TP1
TP2
TP3
R3
3R3
C7
4.7uF
D1
1N5819
Q7
AON7240
Q1
AON7240
R4
R5
10m
VSHUNT1P
R7
C15
D2
Q2
Q3
R8
R9
VSHUNT2P
R11
C23
D3
Q4
Q5
R12
R10
VSHUNT3P
Feedback
OPAMP1_VOUT
OPAMP2_VOUT
OPAMP3_VOUT
C35
C36
C37
10pF
OPAMP1_VINM0
OPAMP2_VINM0
OPAMP3_VINM0
PGA CONNECTED
0.01ohm *16 amplify
Range +- 10A
C28
100nF
R6
1k
R35
30K
R36
30K
OPAMP1_VINP
R17
R37
R38
OPAMP2_VINP
R22
R14
R15
OPAMP3_VINP
Hall Sensor
C33
100nF
J1
Sensor
MotorNTC
MotorSDA
MotorSCK
CAN
U3
TJA1042TK-3
TXD
RXD
VIO
STB
CANH
CANL
VCC
R27
120R
D4
NUP2105L
C24
100nF
C31
100nF
J3
CAN1
RM2026
ENTERPRIZE
Designed By Baoqi
HKUST ENTERPRIZE | RoboMotor Project
Sheet: /
File: RoboMotor-DJI-M3508.kicad_sch
Title: RoboMotor-DJI-M3508
Size: User
Date: 2026-03-24
Rev:
KiCad E.D.A. 8.0.2
Id: 1/1