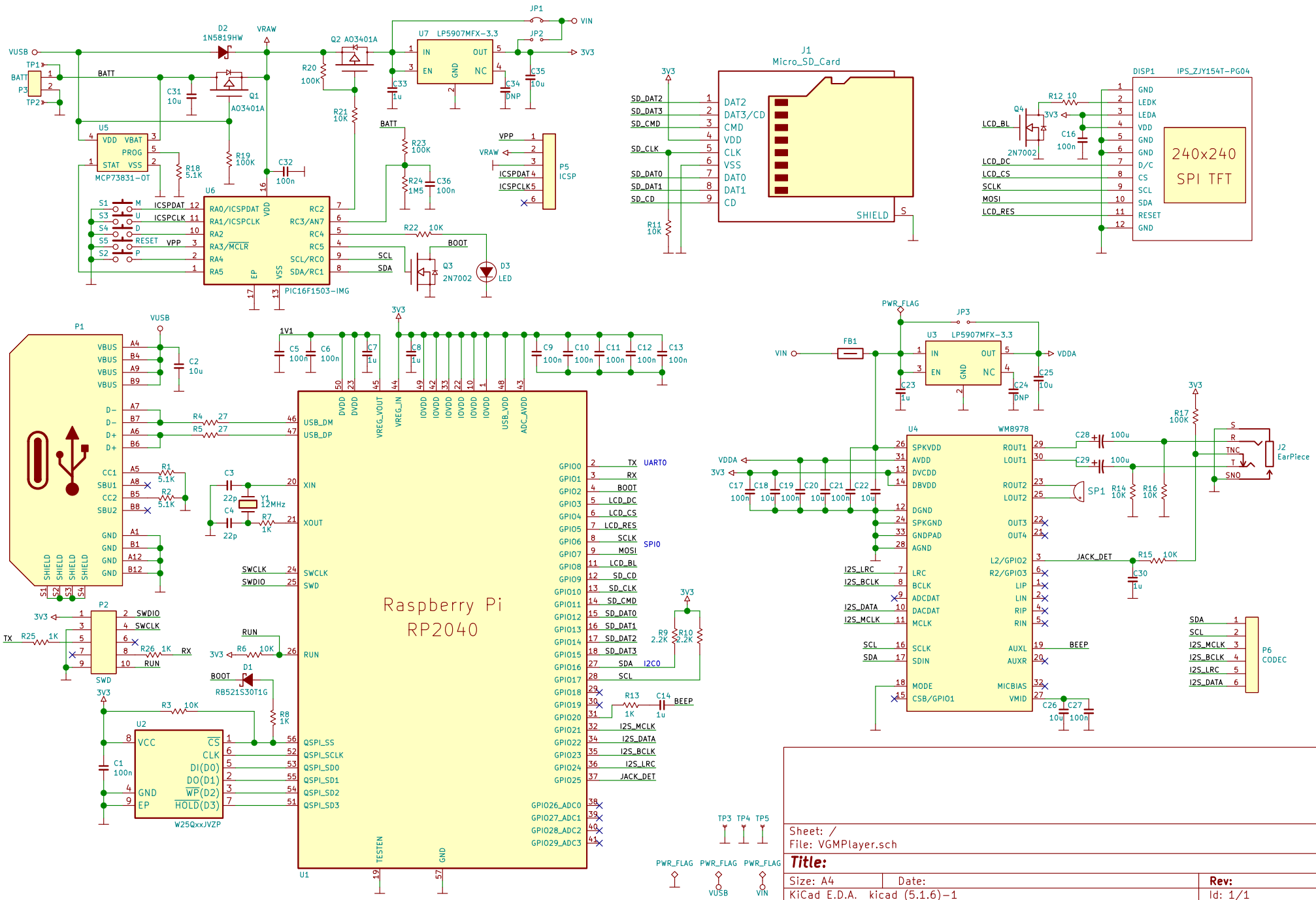

Sheet: /
File: VGMPlayer.sch

Title:

Size: A4	Date:	Rev:
KiCad E.D.A. kicad (5.1.6)-1		Id: 1/1