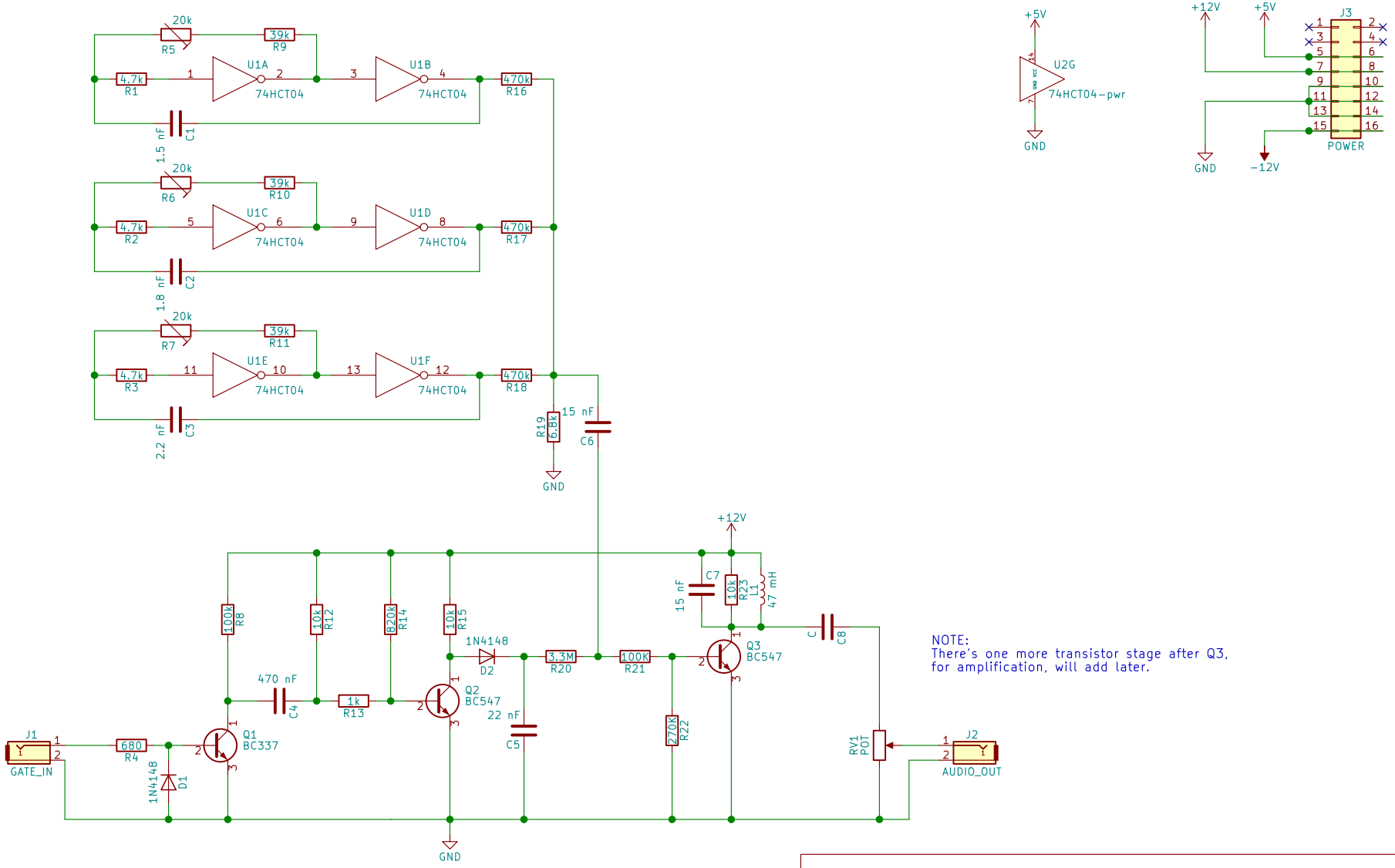

NOTE:
There's one more transistor stage after Q3, for amplification, will add later.

NOTE:
R12/C4 are there to shape the input gate into a trigger envelope (since it's not a real CR-78, I have no control over the trig pulse). It's not ideal though, and could be replaced with something smarter (maybe a monostable multivibrator up front?).

Sheet: /		
File: metallic_beat.sch		
Title: Metallic Beat		
Size: A4	Date: March 21, 2018	**Rev:** A
KiCad E.D.A. eeschema 4.0.7		Id: 1/1