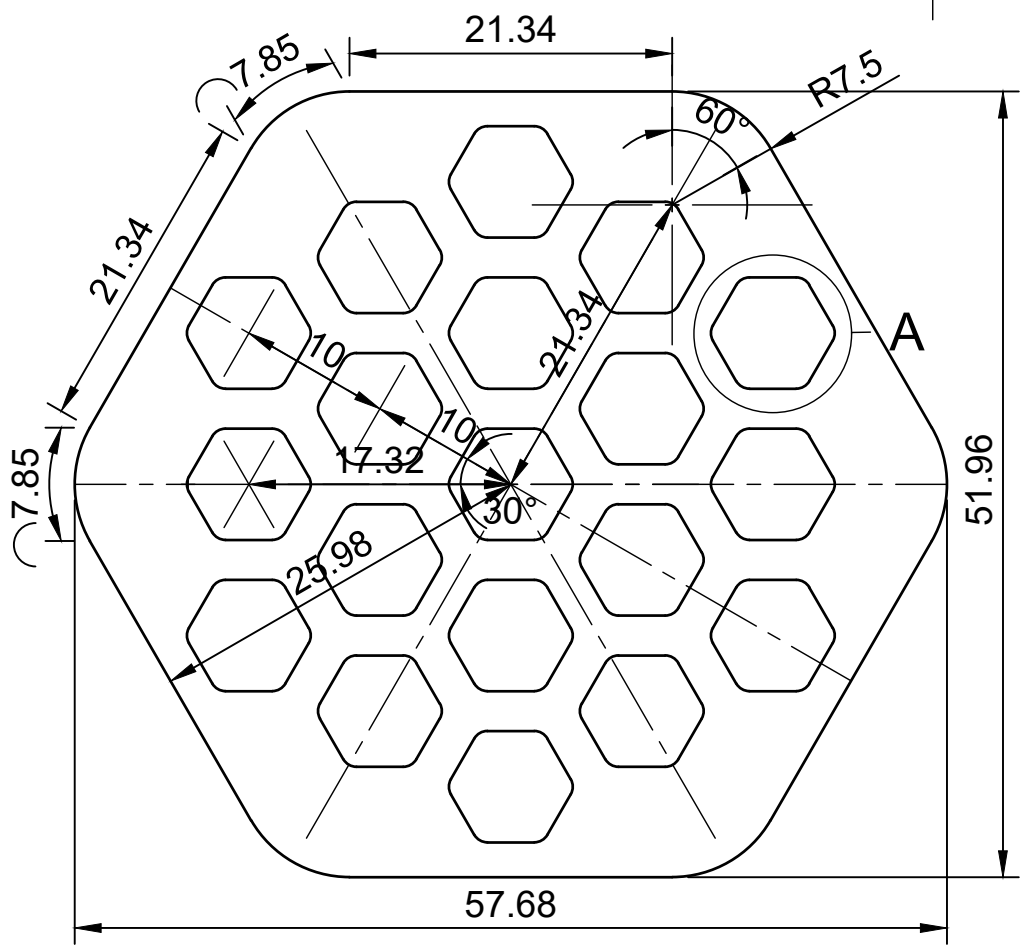

A (8:1)

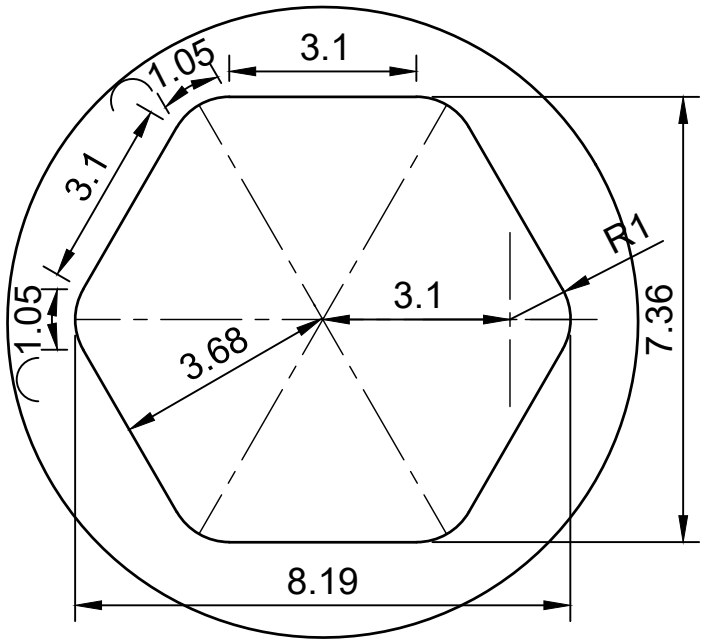

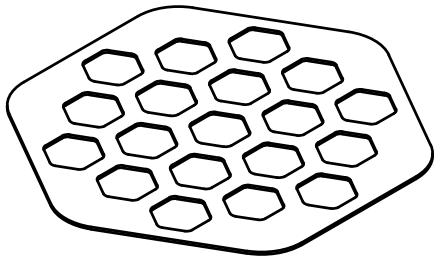

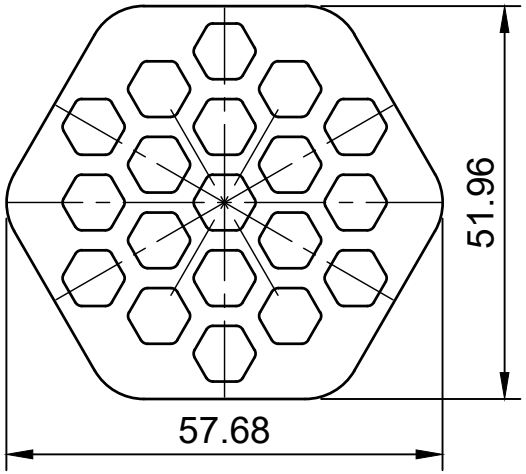

Unit ::: Metric

Part Name ::: Pixel Shadow Mask A	Local.Part.Num ::: PSMA01
Material ::: 316L Stainless Steel	Thickness ::: 0.015" /// 0.361mm
Designed By ::: Alfredo Barajas Enriquez	Sheet Size ::: A4
GitHub ::: https://github.com/barajasalfredo13/Comb.Mod.SAQ.Pix	