2 - BEDROOM

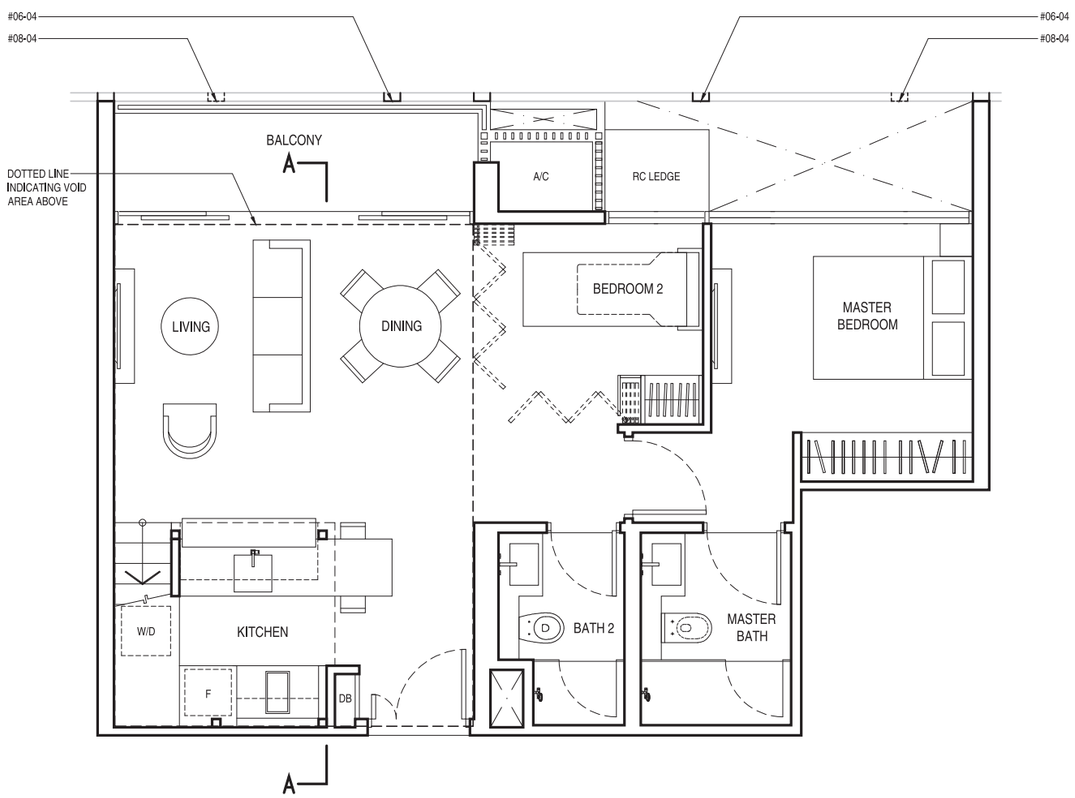

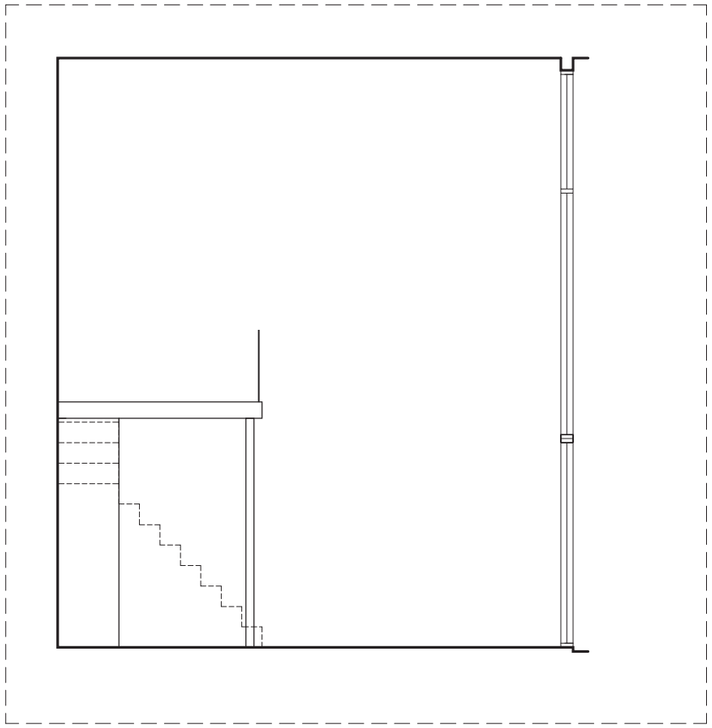

KEY PLAN
(NOT TO SCALE)

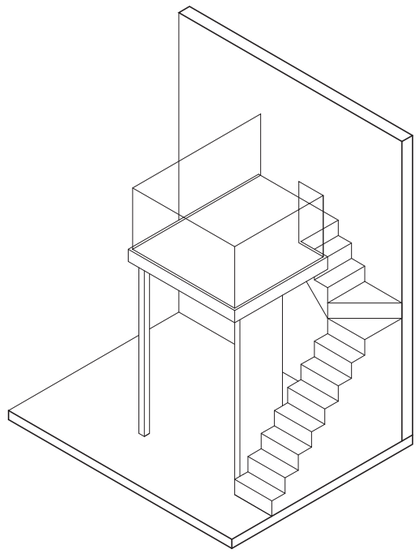

TYPE C1a

97 sq.m. / 1,044 sq.ft. (including void area of 29 sq.m./312 sq.ft. above living, dining and kitchen)

#06-04
#08-04

PART SECTION A-A

FLOOR TO FLOOR 7.20 m. ABOVE LIVING/ DINING AND KITCHEN

TYPE C1a

ISOMETRIC VIEW OF FURNITURE DECK

(NOT TO SCALE)

0 5m

2 - BEDROOM

TYPE C1a (PES)

105 sq.m. / 1,130 sq.ft. (including void area of 29 sq.m./312 sq.ft. above living, dining and kitchen)

#04-04

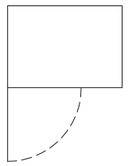

unit #04-04: including air-con condensers of 1 sq.m./ 11 sq.ft. accessory lot located on 3rd floor podium carpark

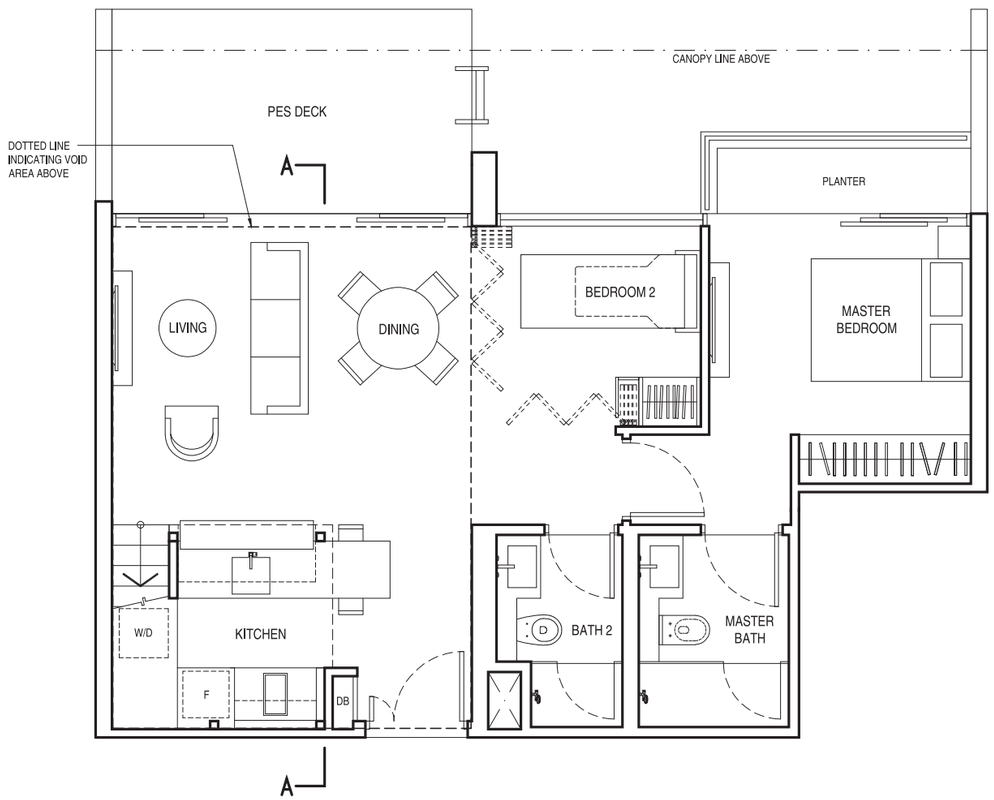

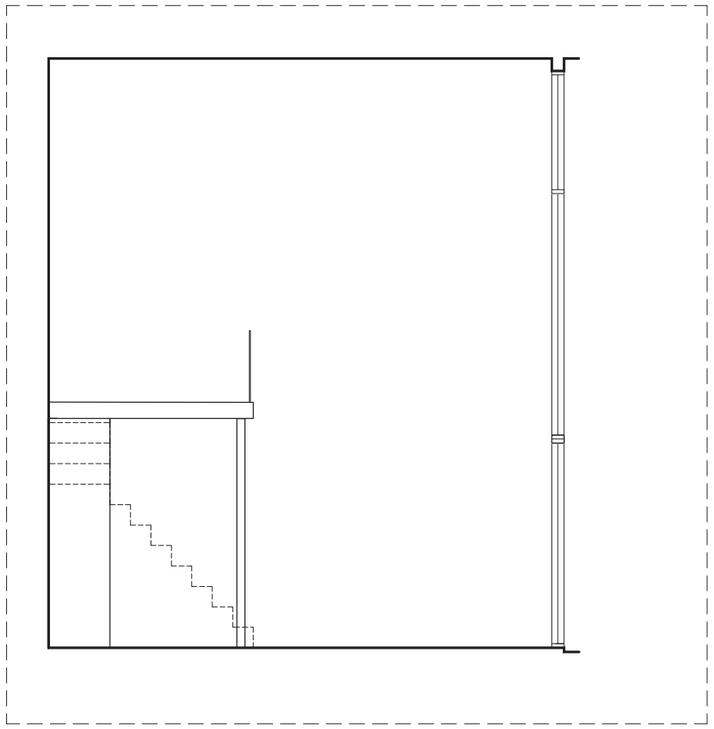

PART SECTION A-A

FLOOR TO FLOOR 7.20 m. ABOVE LIVING/ DINING AND KITCHEN

TYPE C1a (PES)

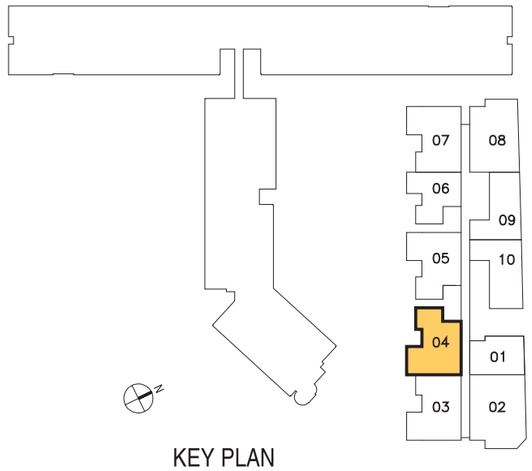

KEY PLAN

(NOT TO SCALE)

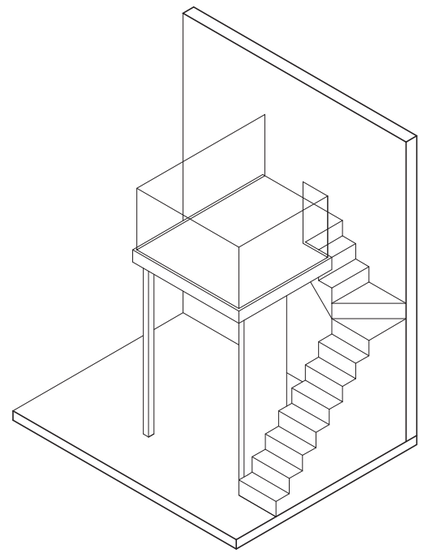

ISOMETRIC VIEW OF FURNITURE DECK

(NOT TO SCALE)

2 - BEDROOM

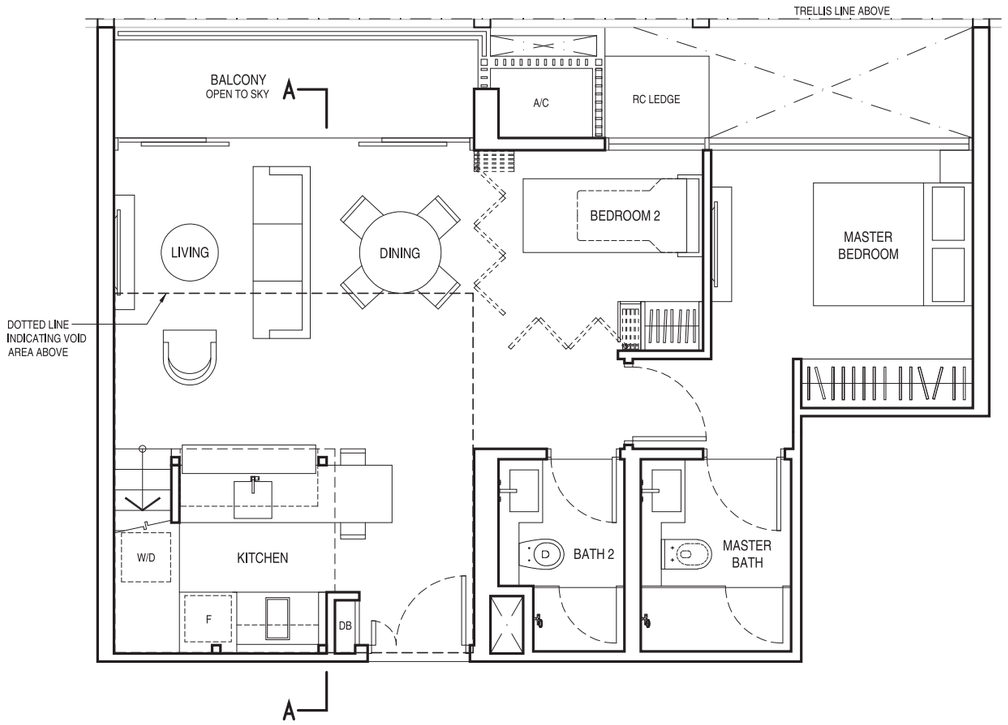

TYPE C1c

89 sq.m. / 958 sq.ft. (including void area of 21 sq.m./226 sq.ft. above living, dining and kitchen)

#10-04

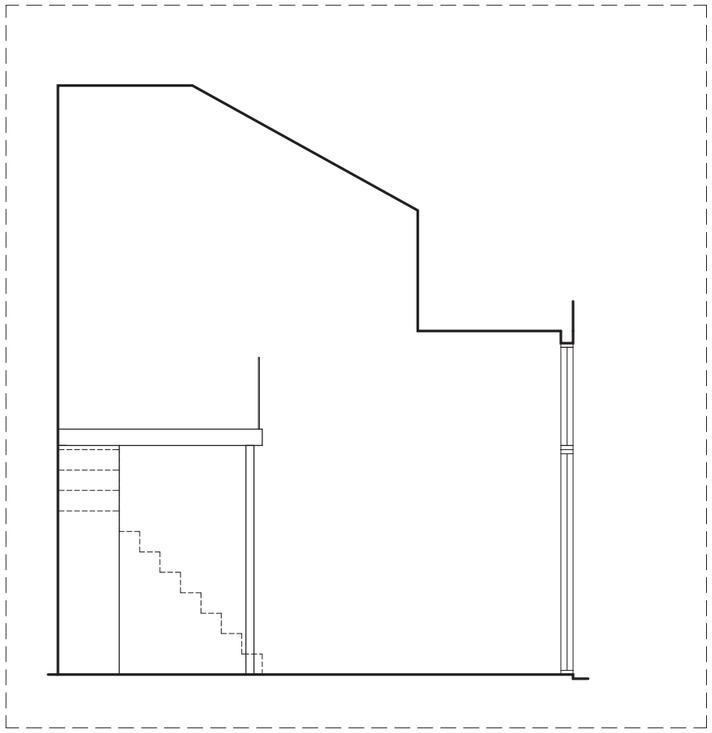

PART SECTION A-A

FLOOR TO ROOF VARIES FROM 4.20m TO 7.20m

TYPE C1c

KEY PLAN

(NOT TO SCALE)

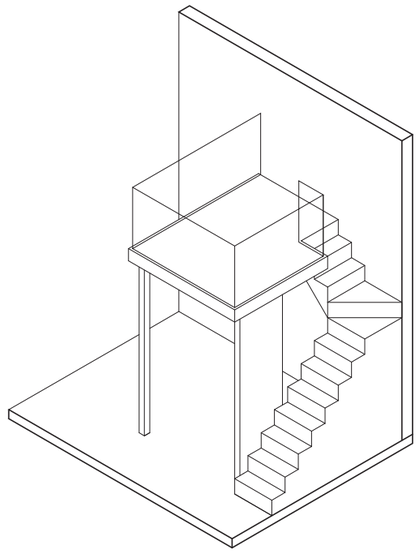

ISOMETRIC VIEW OF FURNITURE DECK

(NOT TO SCALE)

0 5m

2 - BEDROOM

TYPE C2 (PES)

76 sq.m. / 818 sq.ft.

#04-05

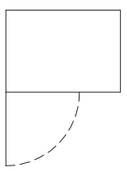

unit #04-05: including air-con condensers
of 1 sq.m./ 11 sq.ft.
accessory lot located
on 3rd floor podium carpark

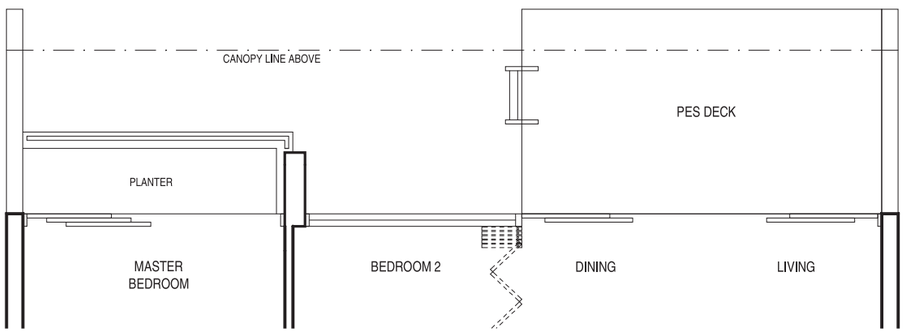

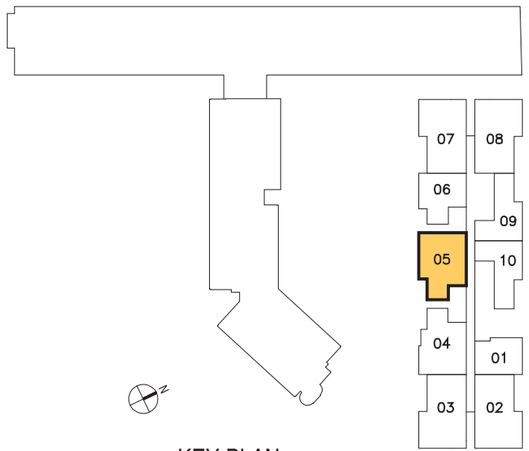

KEY PLAN
(NOT TO SCALE)

TYPE C2

70 sq.m. / 753 sq.ft.

#06-05
#08-05

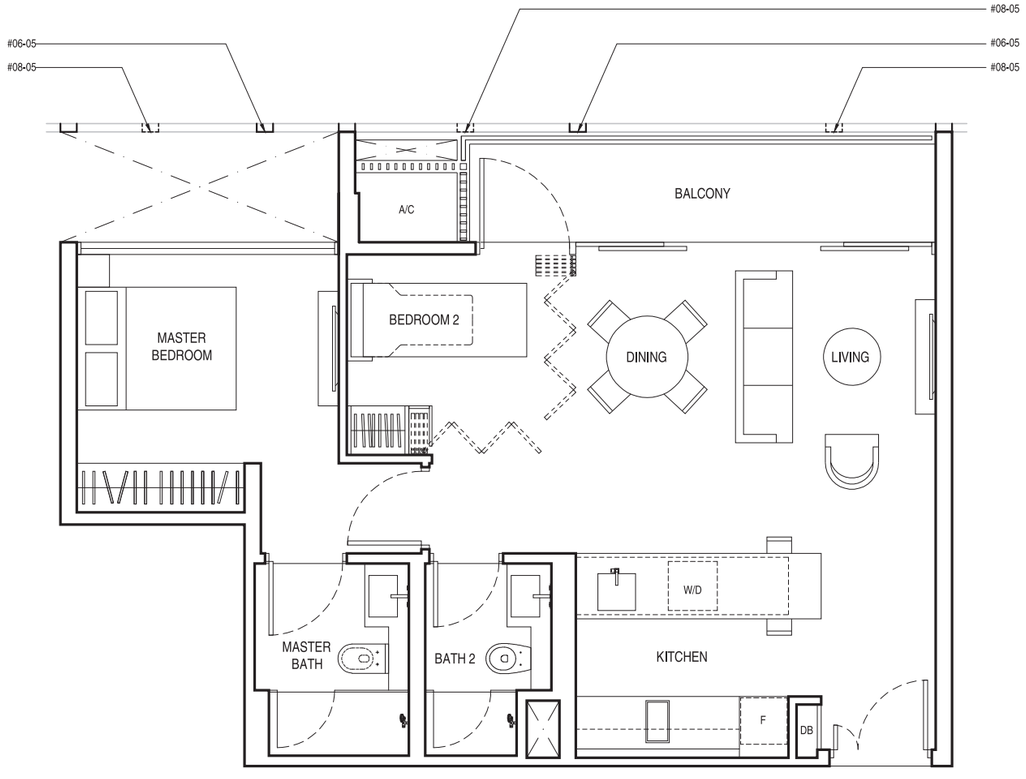

2 - BEDROOM

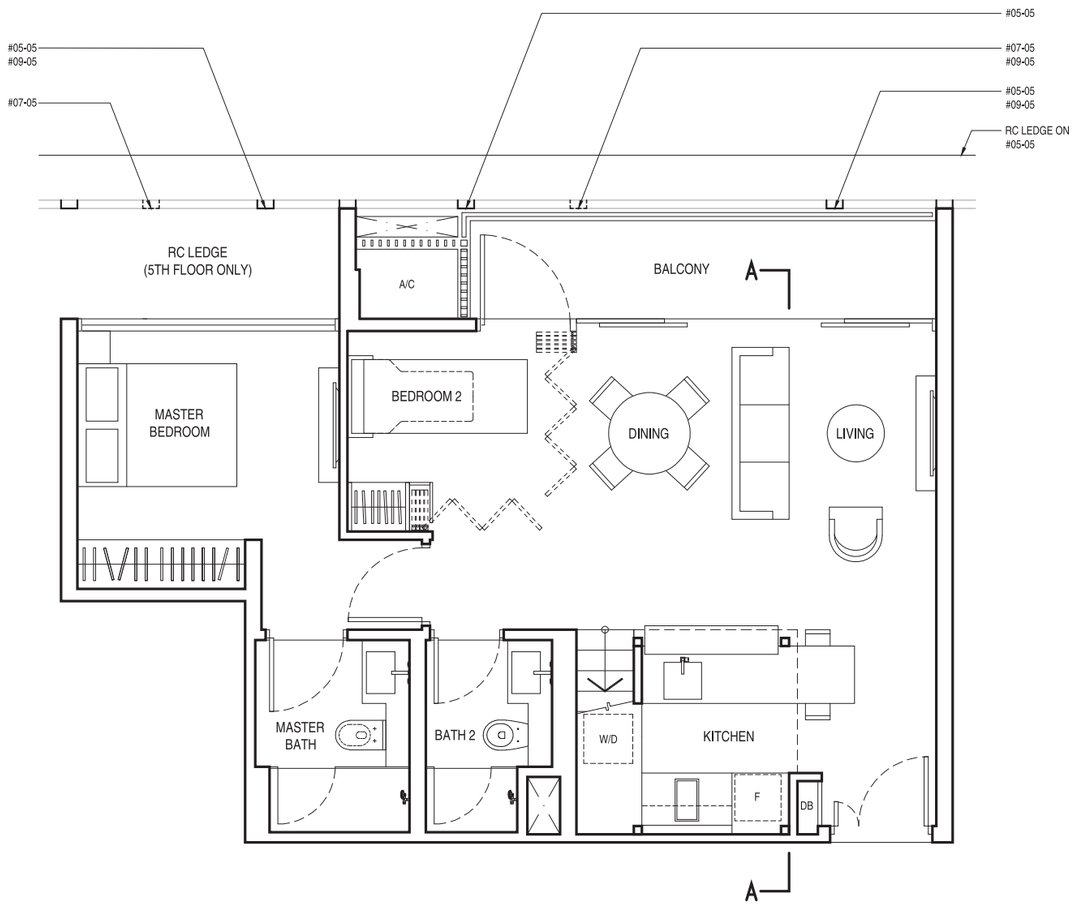

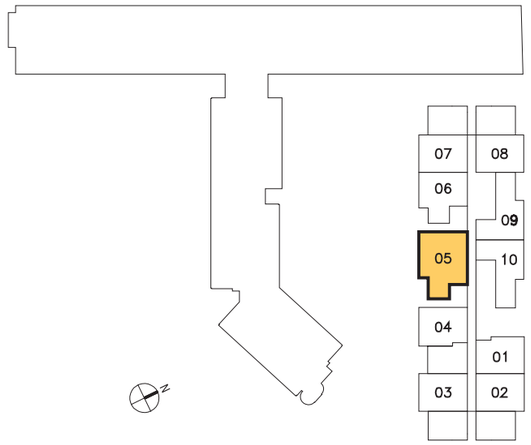

KEY PLAN
(NOT TO SCALE)

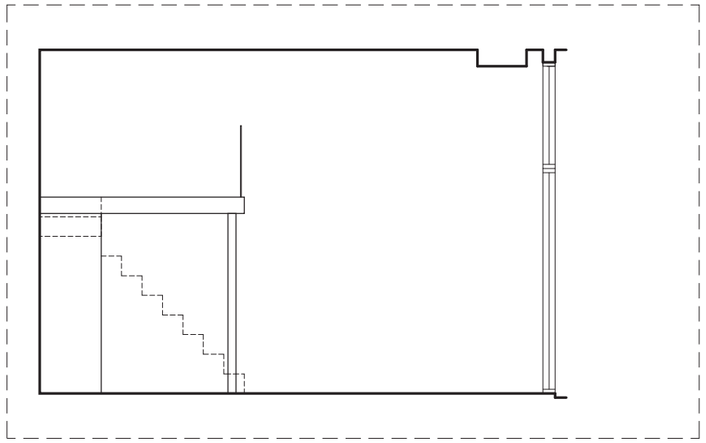

PART SECTION A-A
FLOOR TO FLOOR 4.20m

TYPE C2b

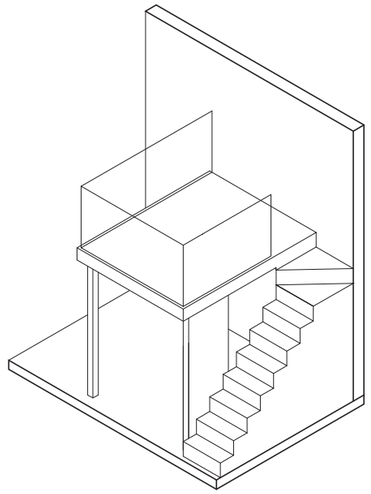

ISOMETRIC VIEW OF
FURNITURE DECK
(NOT TO SCALE)

TYPE C2b

70 sq.m. / 753 sq.ft.

#05-05
#07-05
#09-05

2 - BEDROOM

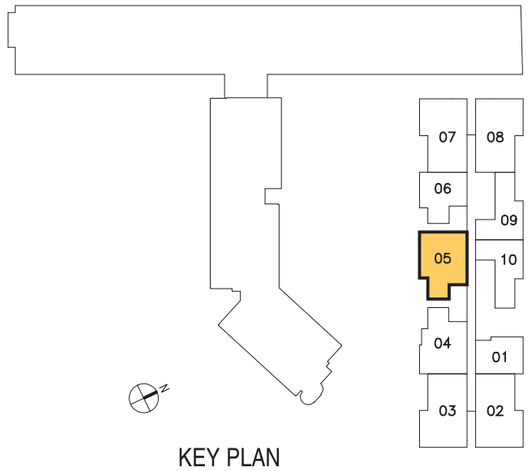

KEY PLAN
(NOT TO SCALE)

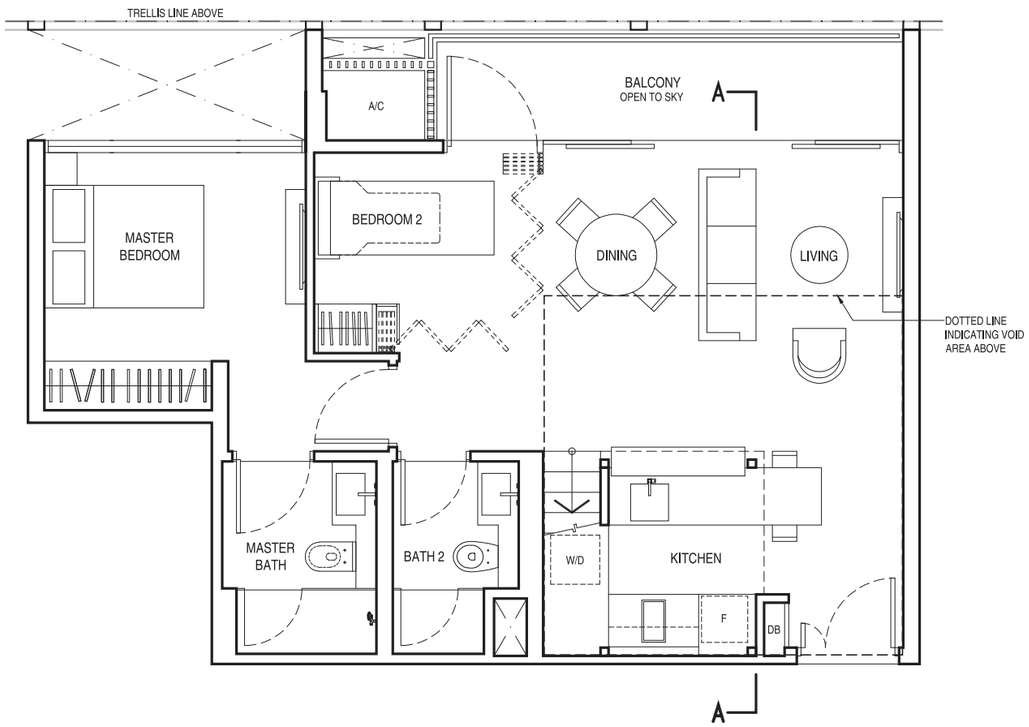

TYPE C2c

91 sq.m. / 980 sq.ft. (including void area of 21 sq.m./226 sq.ft. above living, dining and kitchen)

#10-05

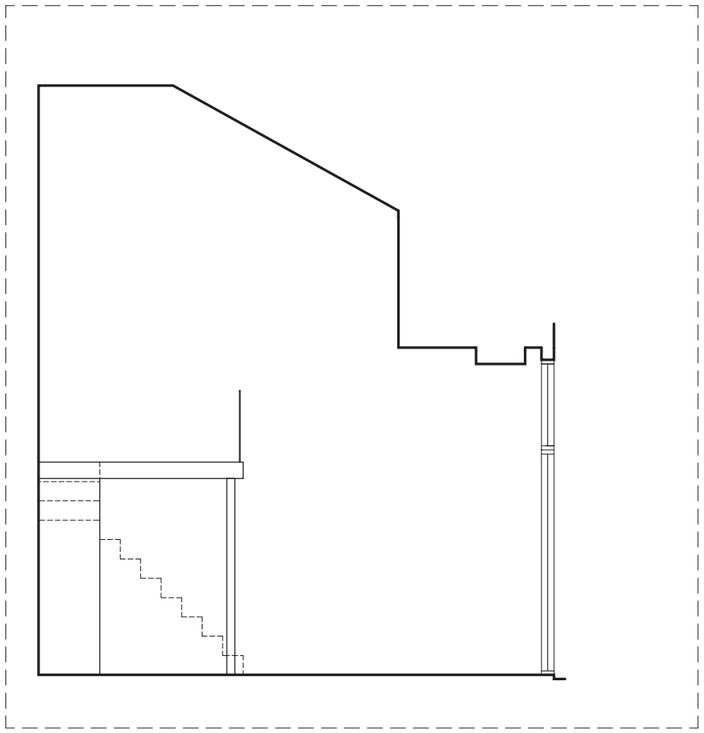

PART SECTION A-A

FLOOR TO ROOF VARIES FROM 4.20m TO 7.20m

TYPE C2c

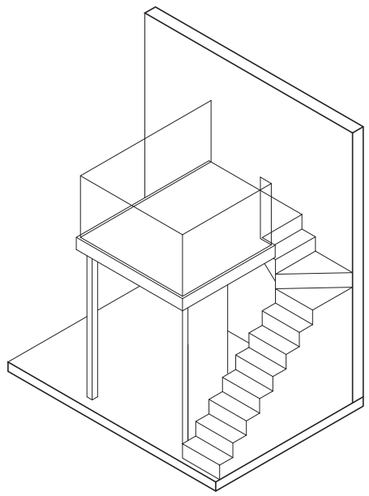

ISOMETRIC VIEW OF FURNITURE DECK

(NOT TO SCALE)

2 - BEDROOM

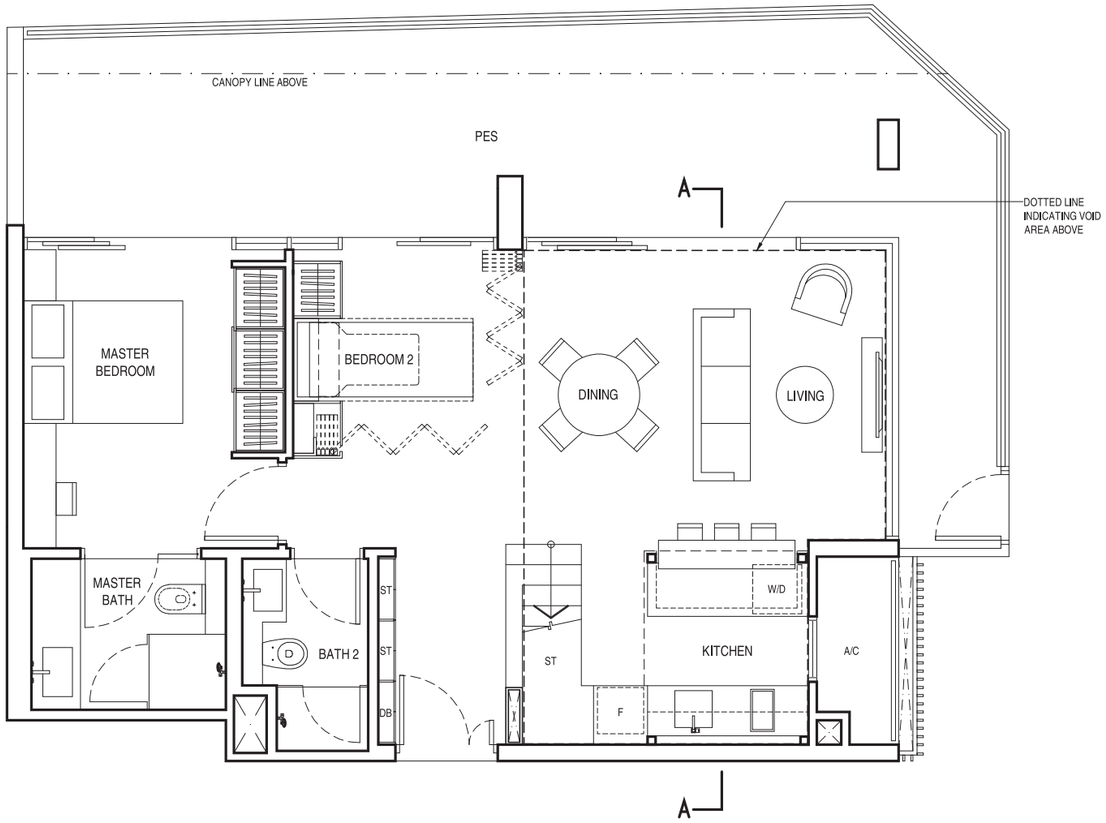

TYPE C3a1 (PES)

128 sq.m. / 1,378 sq.ft. (including void area of 26 sq.m./280 sq.ft. above living, dining and kitchen)

#04-02

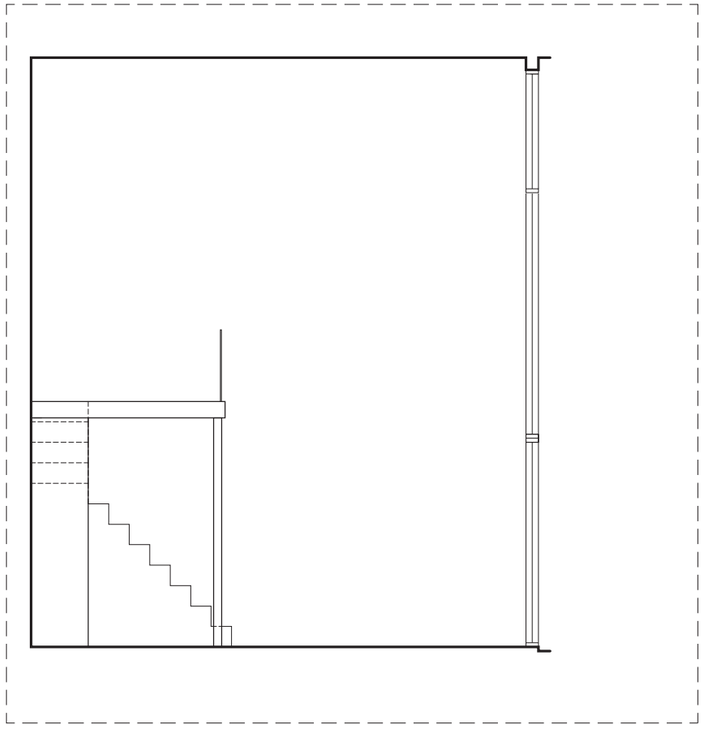

PART SECTION A-A

FLOOR TO FLOOR 7.20 m. ABOVE LIVING/ DINING AND KITCHEN

TYPE C3a1(PES)

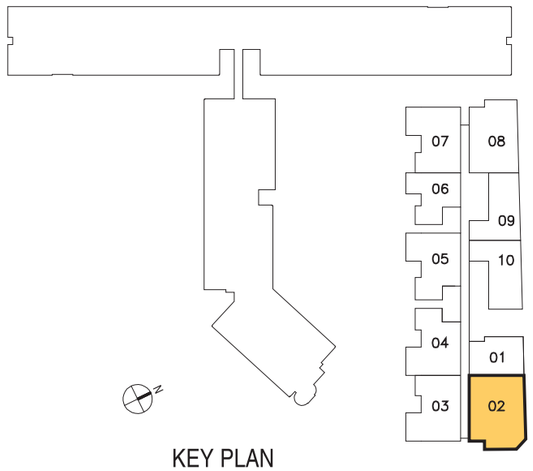

KEY PLAN

(NOT TO SCALE)

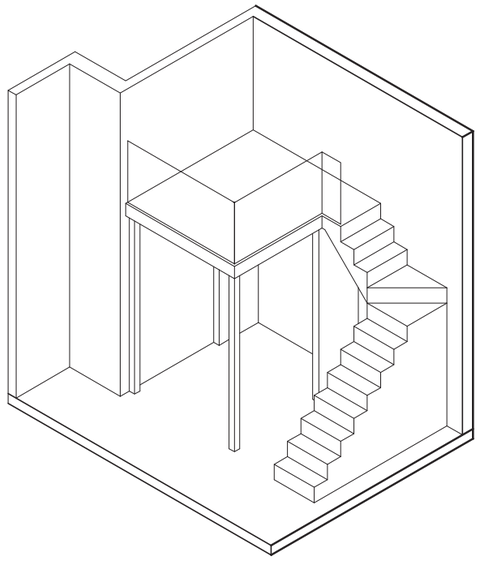

ISOMETRIC VIEW OF FURNITURE DECK

(NOT TO SCALE)

0 5m

2 - BEDROOM

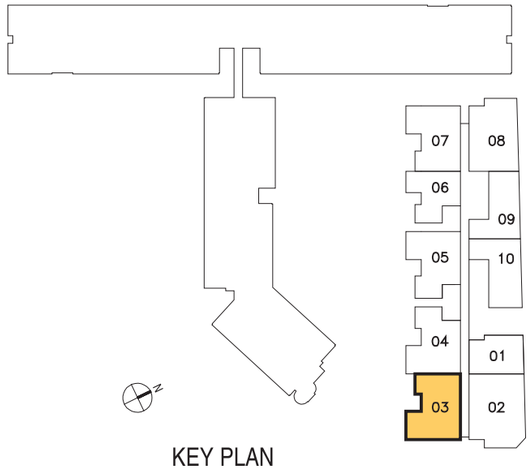

KEY PLAN
(NOT TO SCALE)

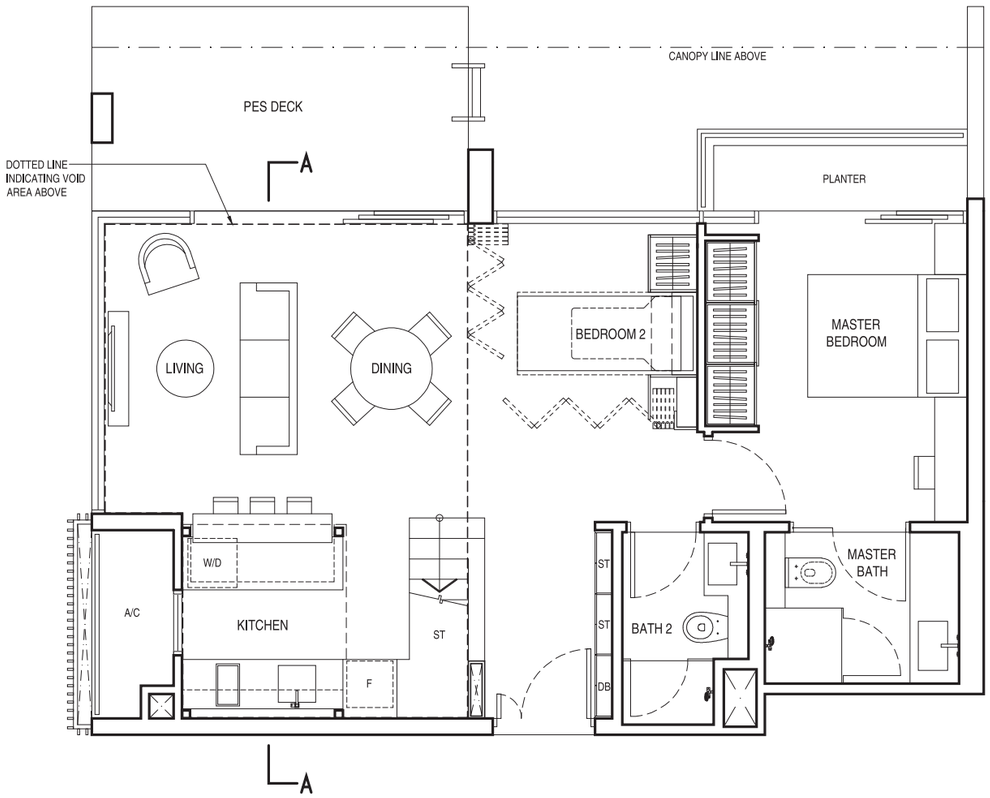

TYPE C3a2 (PES)

107 sq.m. / 1,152 sq.ft. (including void area of 26 sq.m./280 sq.ft. above living, dining and kitchen)

#04-03

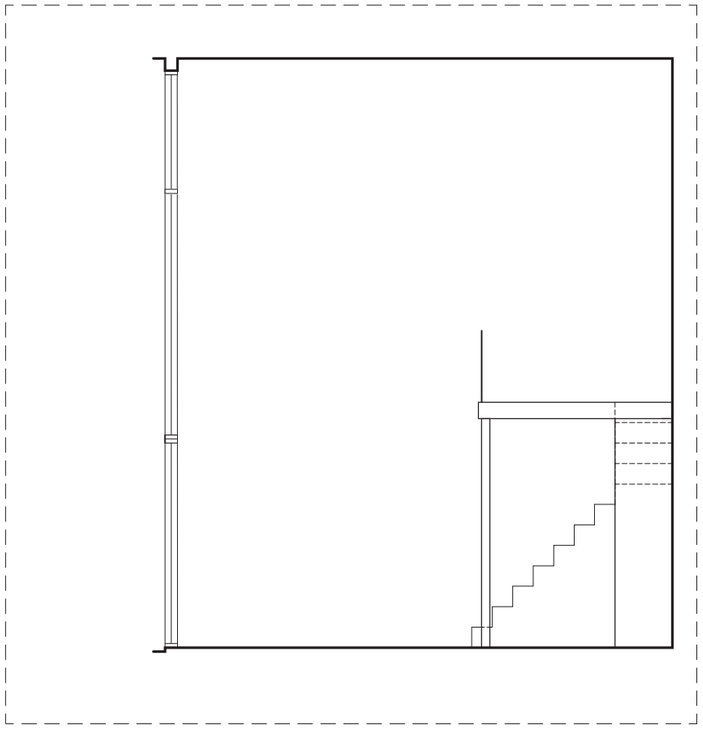

PART SECTION A-A

FLOOR TO FLOOR 7.20 m. ABOVE LIVING/ DINING AND KITCHEN

TYPE C3a2(PES)

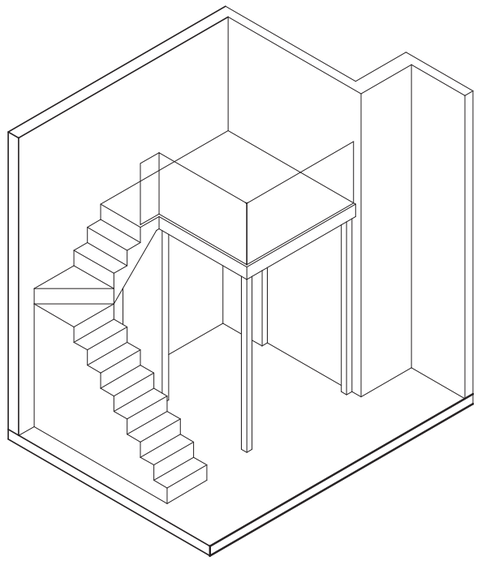

ISOMETRIC VIEW OF FURNITURE DECK

(NOT TO SCALE)

0 5m

2 - BEDROOM

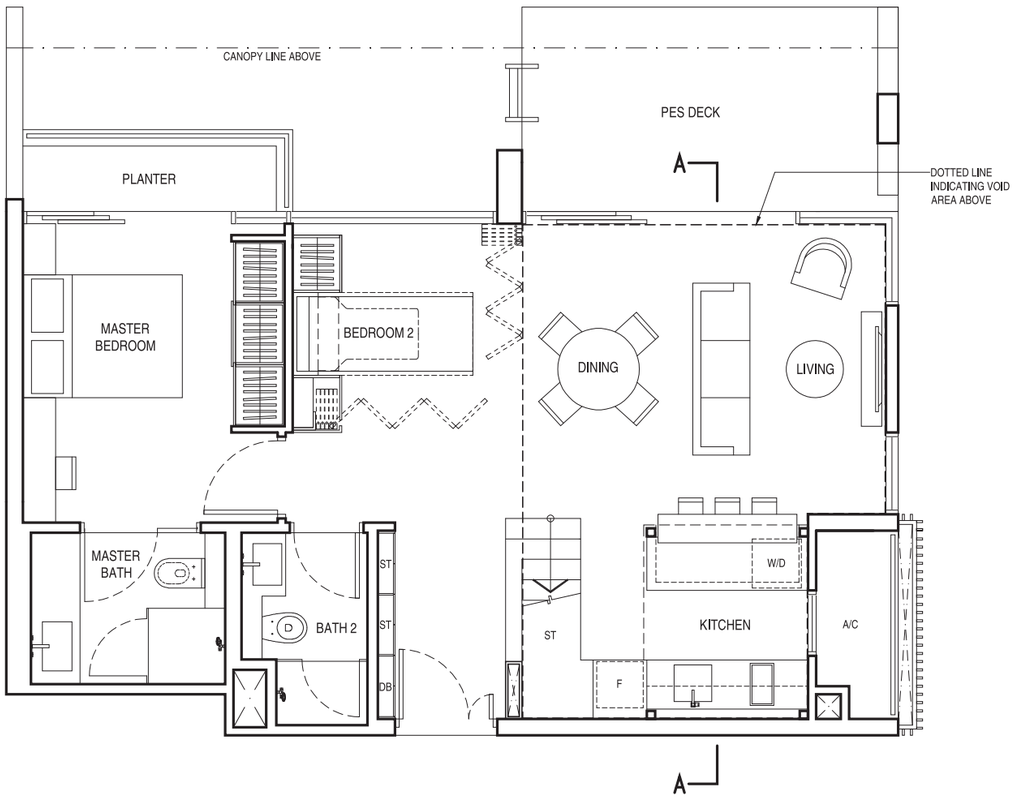

TYPE C3a3 (PES)

107 sq.m. / 1,152 sq.ft. (including void area of 26 sq.m./280 sq.ft. above living, dining and kitchen)

#04-07

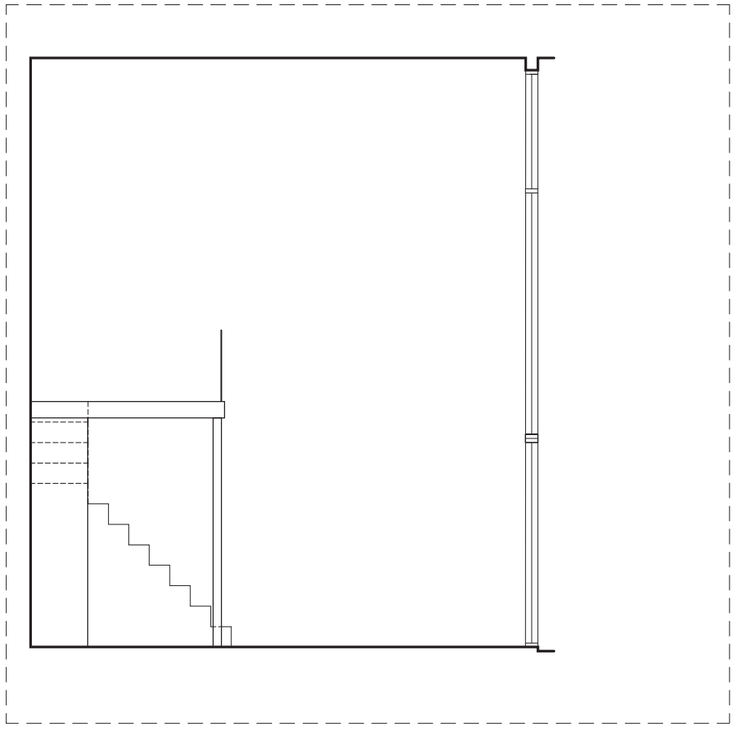

PART SECTION A-A

FLOOR TO FLOOR 7.20 m. ABOVE LIVING/ DINING AND KITCHEN

TYPE C3a3(PES)

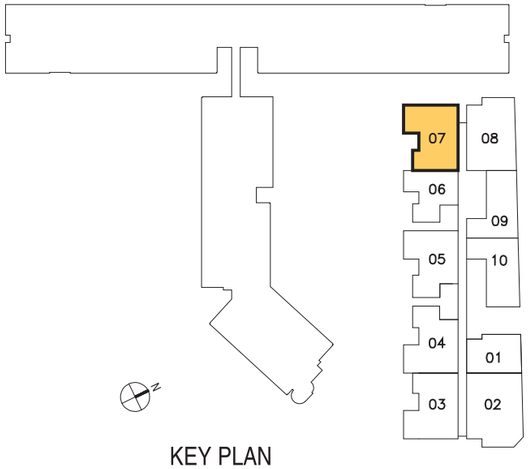

KEY PLAN

(NOT TO SCALE)

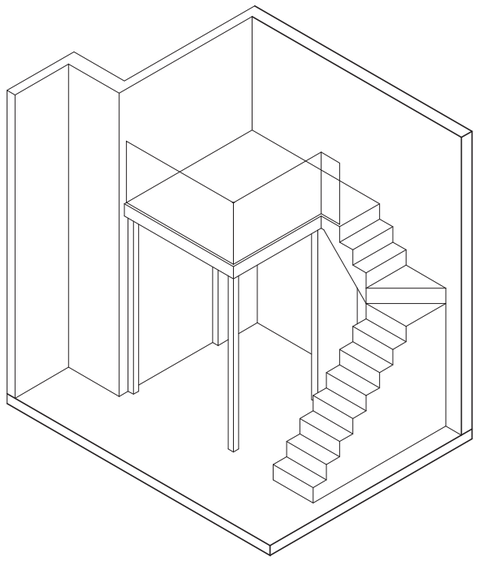

ISOMETRIC VIEW OF FURNITURE DECK

(NOT TO SCALE)

0 5m

2 - BEDROOM

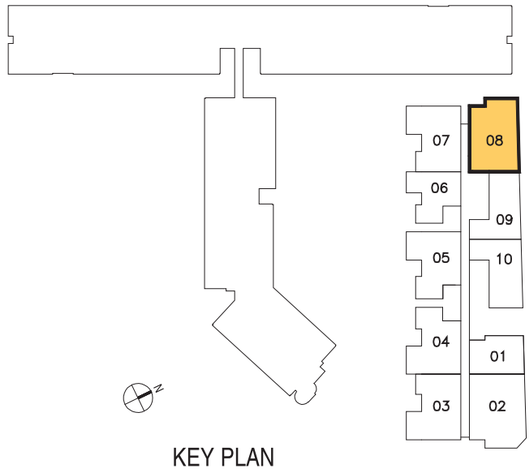

KEY PLAN
(NOT TO SCALE)

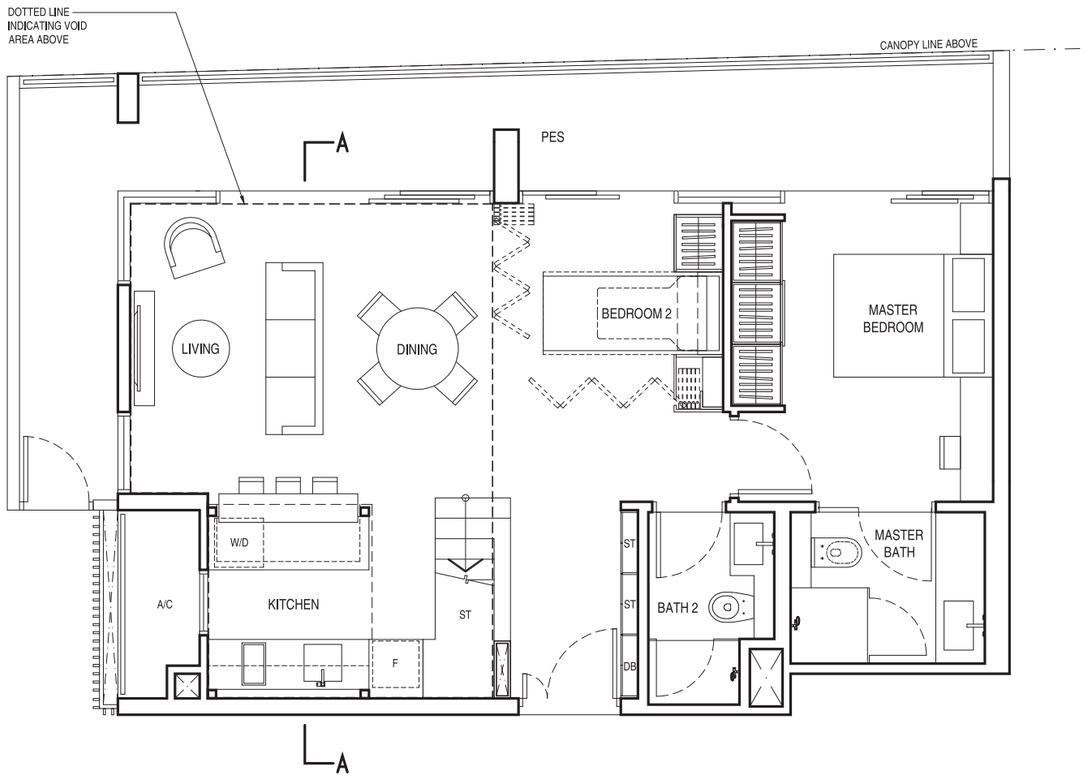

TYPE C3a4 (PES)

115 sq.m. / 1,238 sq.ft. (including void area of 26 sq.m./280 sq.ft. above living, dining and kitchen)

#04-08

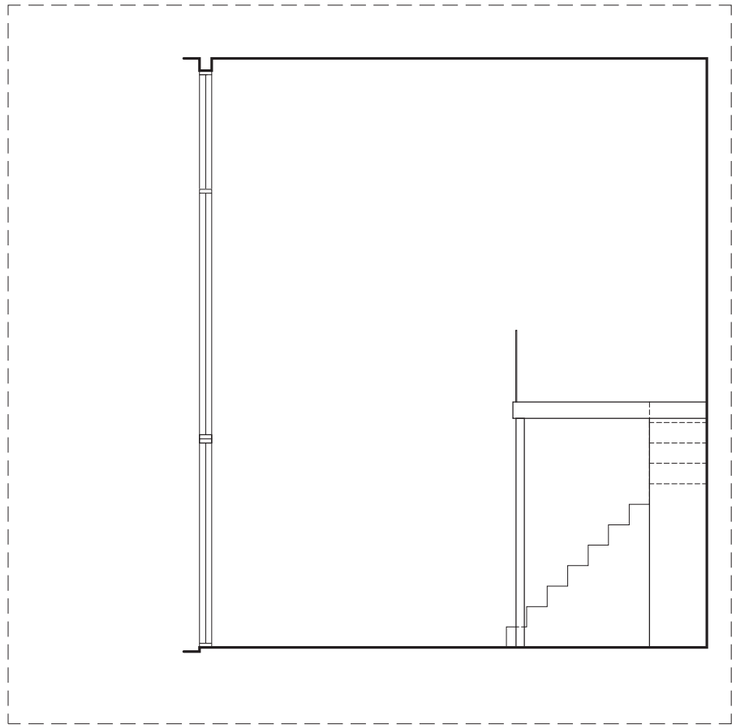

PART SECTION A-A

FLOOR TO FLOOR 7.20 m. ABOVE LIVING/ DINING AND KITCHEN

TYPE C3a4(PES)

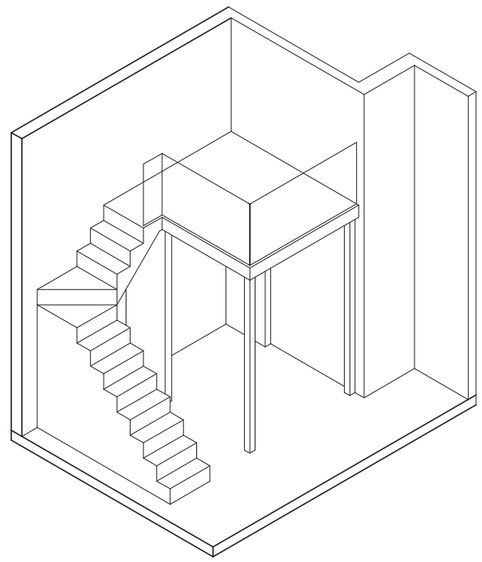

ISOMETRIC VIEW OF FURNITURE DECK

(NOT TO SCALE)

2 - BEDROOM

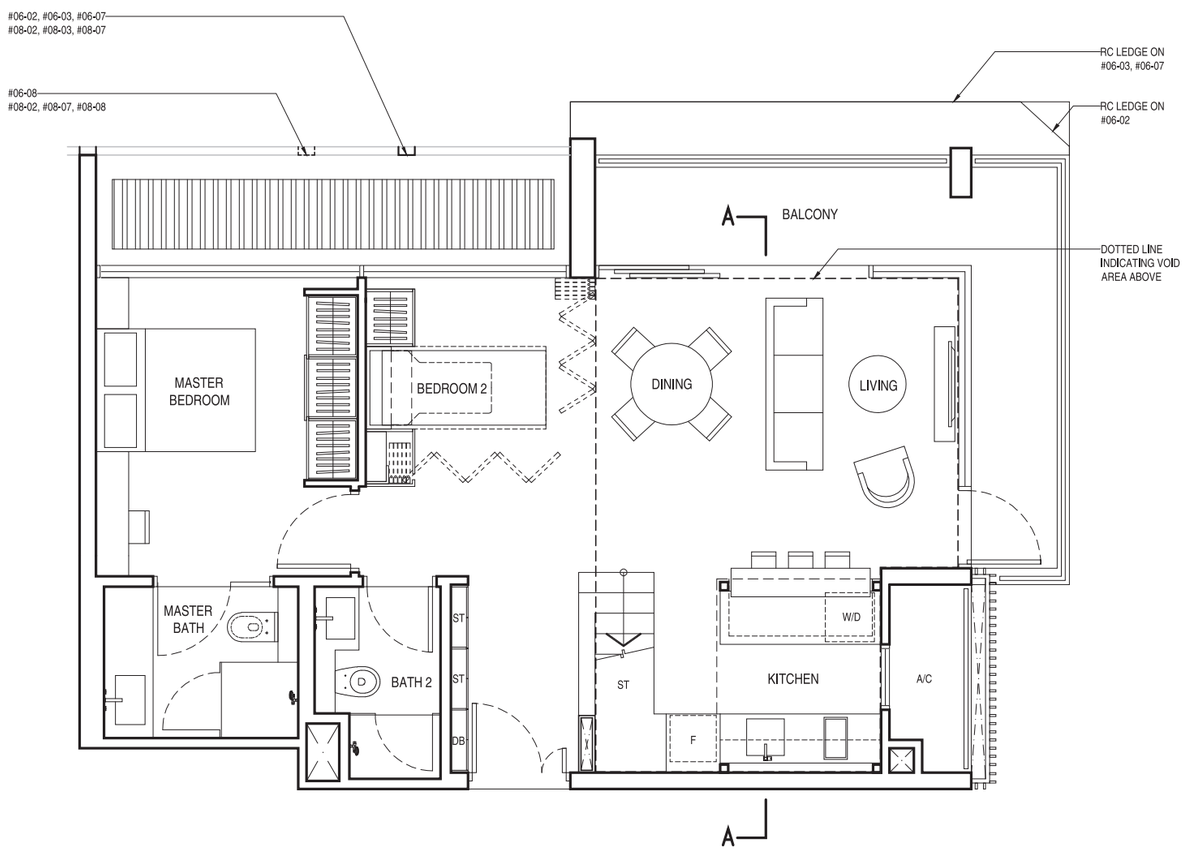

TYPE C3a

104 sq.m. / 1,119 sq.ft. (including void area of 26 sq.m./280 sq.ft. above living, dining and kitchen)

#06-02 #06-03 (MIRROR)
#06-07 #06-08 (MIRROR)
#08-02 #08-03 (MIRROR)
#08-07 #08-08 (MIRROR)

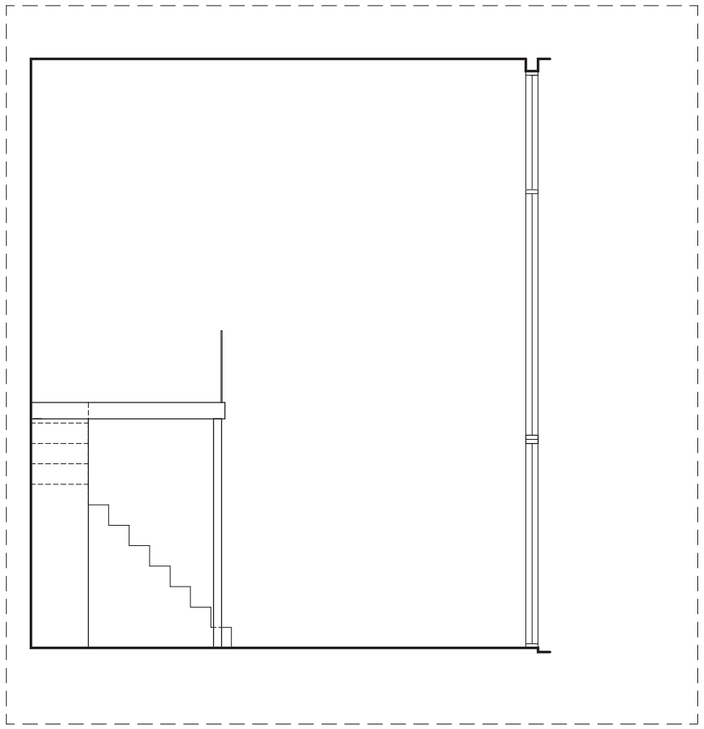

PART SECTION A-A

FLOOR TO FLOOR 7.20 m. ABOVE LIVING/ DINING AND KITCHEN

TYPE C3a

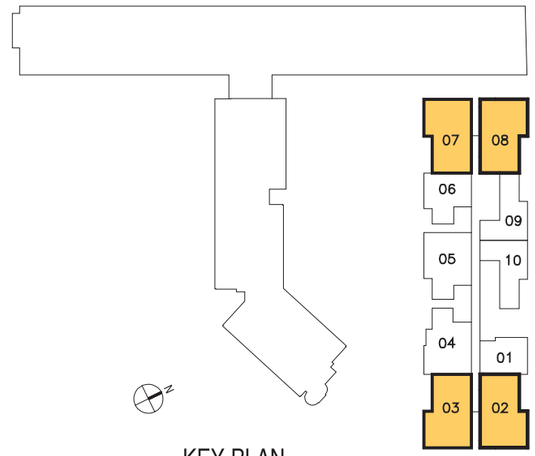

KEY PLAN

(NOT TO SCALE)

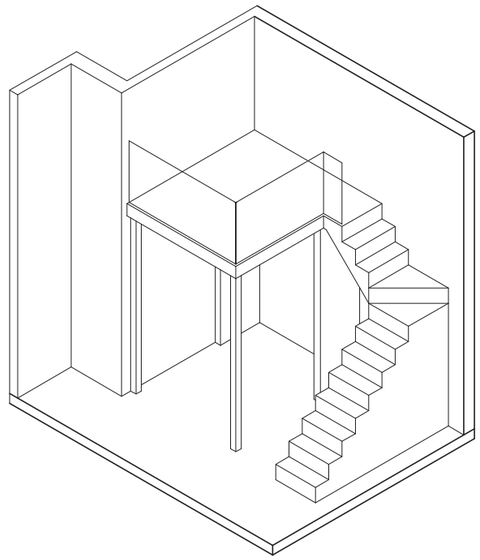

ISOMETRIC VIEW OF FURNITURE DECK

(NOT TO SCALE)

0 5m

2 - BEDROOM

KEY PLAN
(NOT TO SCALE)

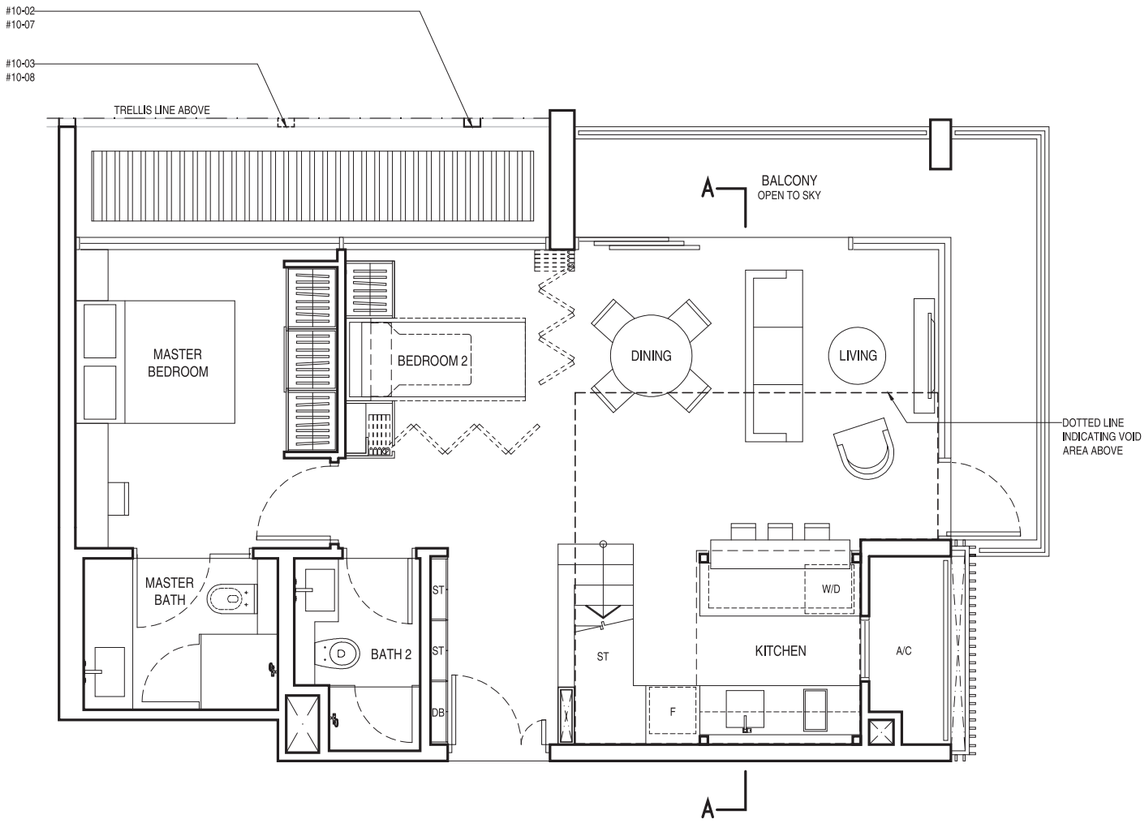

TYPE C3c

97 sq.m. / 1,044 sq.ft. (including void area of 19 sq.m./205 sq.ft. above living, dining and kitchen)

#10-02 #10-03 (MIRROR)
#10-07 #10-08 (MIRROR)

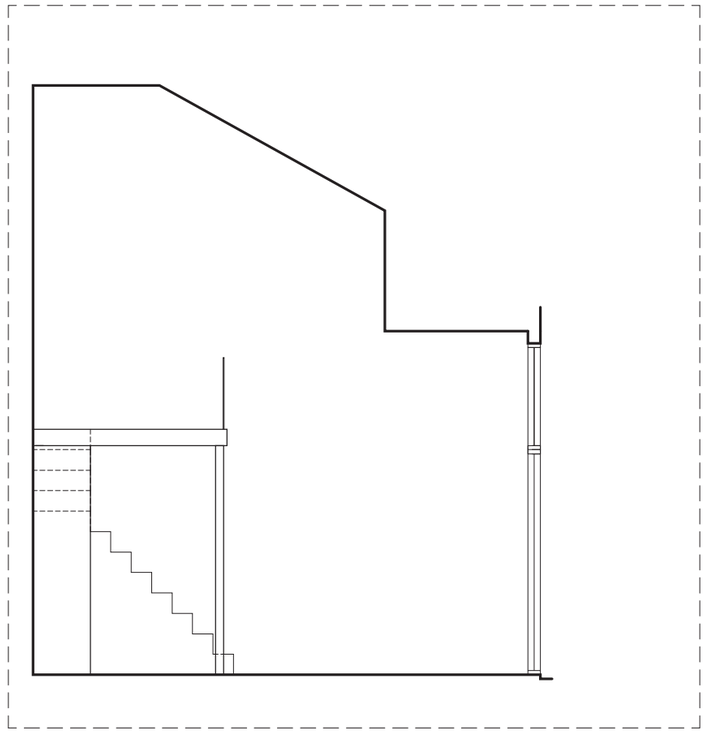

PART SECTION A-A

FLOOR TO ROOF VARIES FROM 4.20m TO 7.20m

TYPE C3c

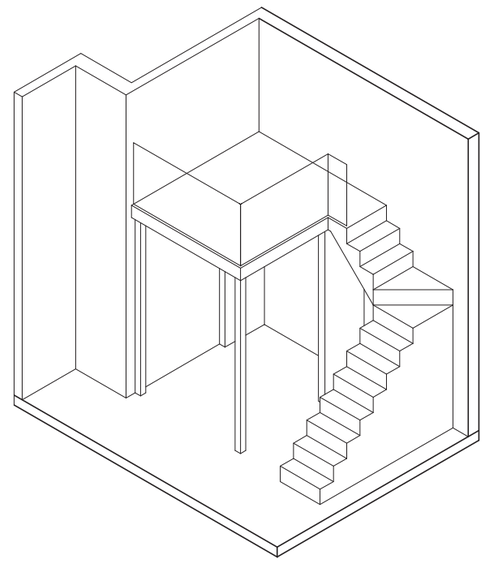

ISOMETRIC VIEW OF FURNITURE DECK

(NOT TO SCALE)