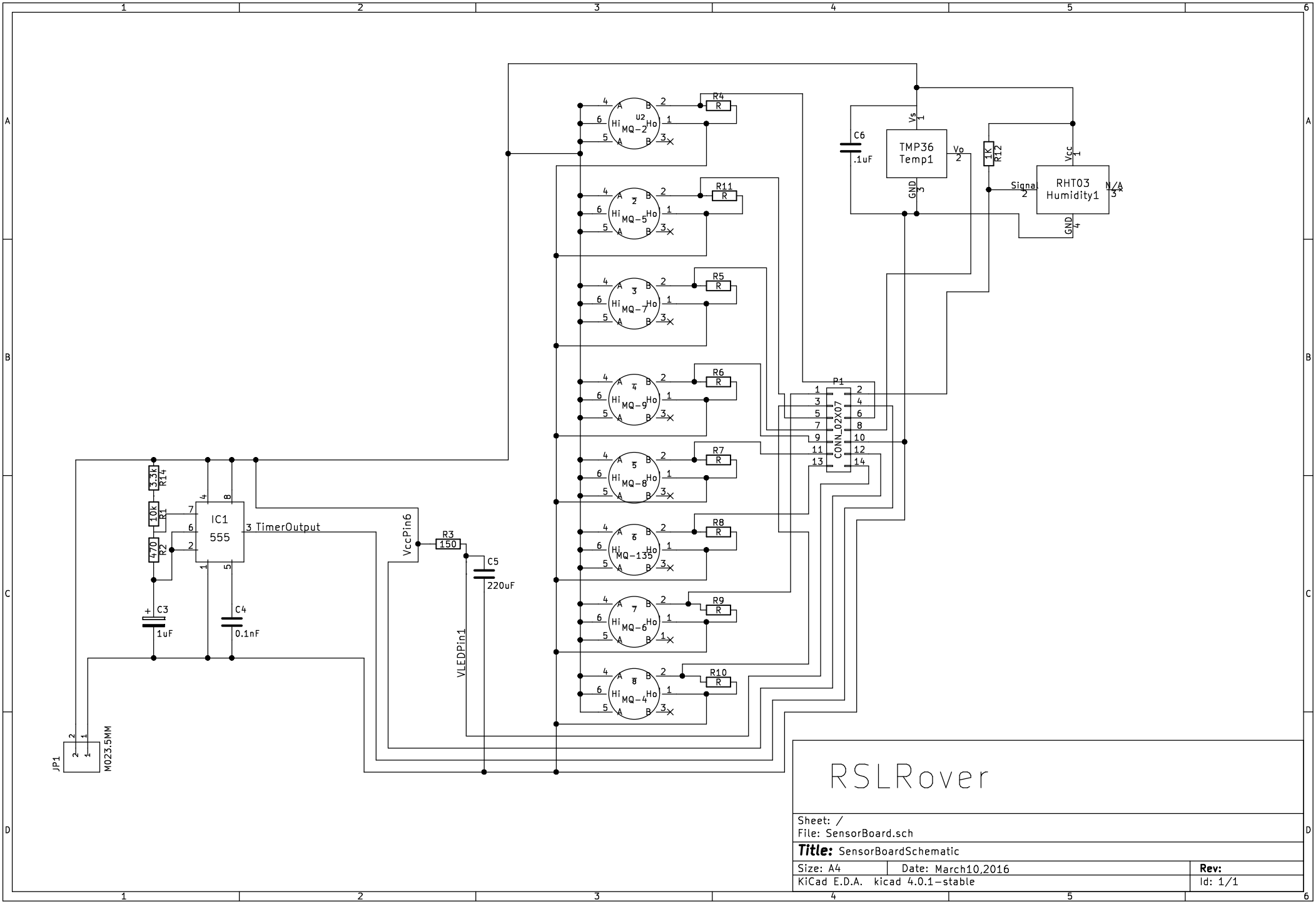
RSLRover
Sheet: /
File: SensorBoard.sch
Title: SensorBoardSchematic
Size: A4
Date: March10,2016
Rev:
KiCad E.D.A. kicad 4.0.1-stable
Id: 1/1
IC1
555
3 TimerOutput
VccPin6
VLEDPin1
R3
150
C5
220uF
C3
1uF
C4
0.1nF
R14
3.3k
R1
10k
R2
470
JP1
M023.5MM
MQ-2
MQ-5
MQ-7
MQ-9
MQ-8
MQ-135
MQ-6
MQ-4
R4
R11
R5
R6
R7
R8
R9
R10
P1
CONN_02X07
C6
.1uF
TMP36
Temp1
Vs
Vo
GND
R12
1K
RHT03
Humidity1
Vcc
Signal
N/A