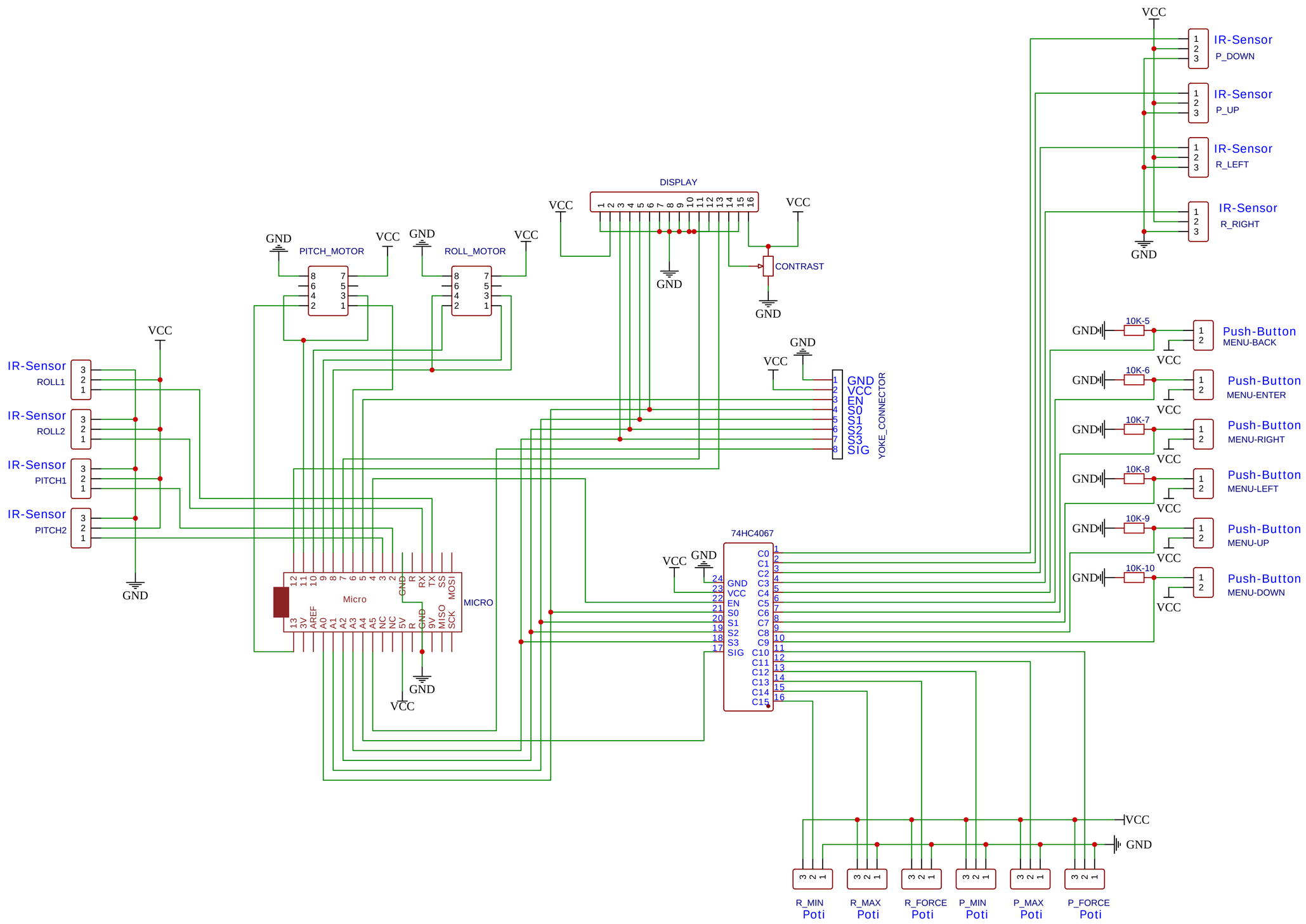

TITLE: FFB Arduino Yoke		REV: 1.2
EasyEDA	Company: Gagagu	Sheet: 1/1
	Date: 16.01.2023 Drawn By: Gagagu	