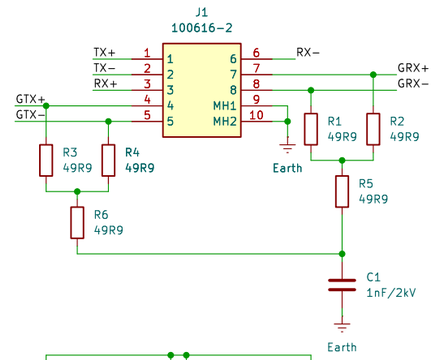

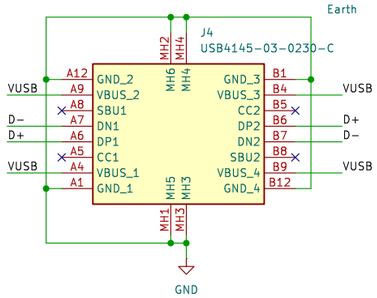

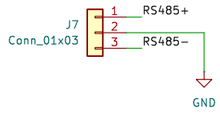

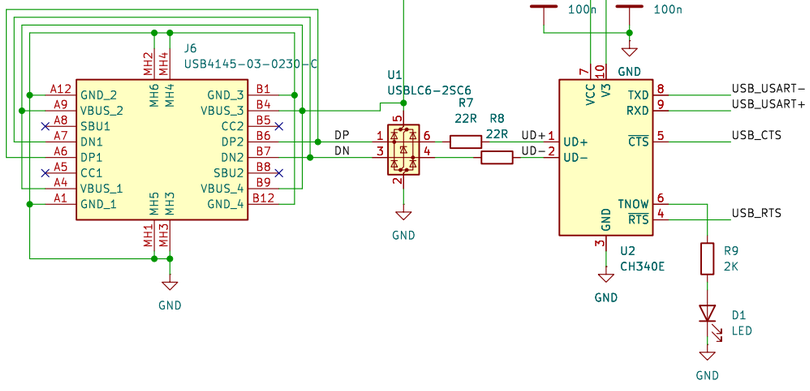

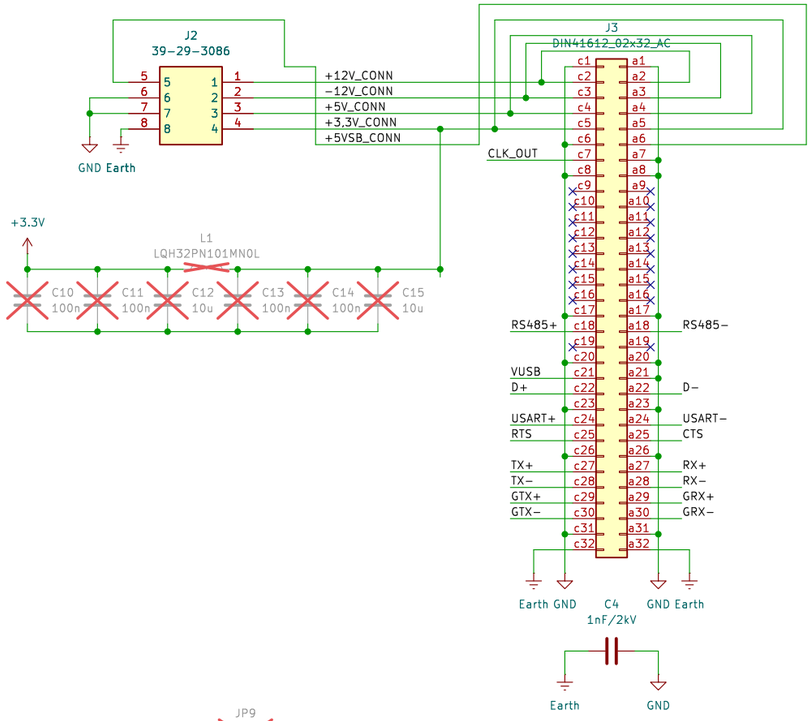

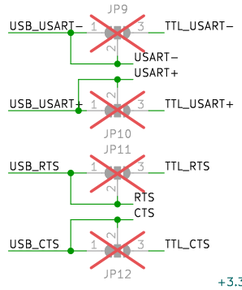

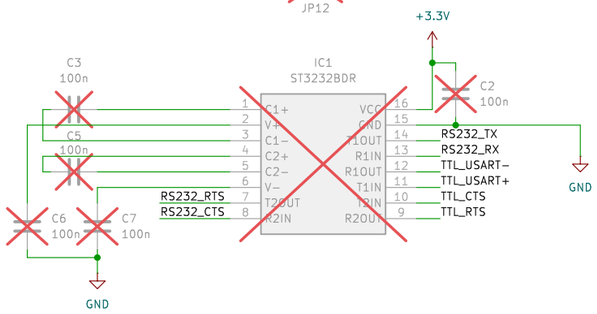

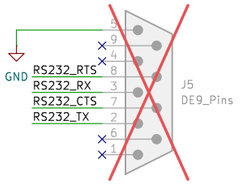

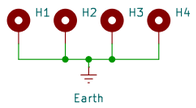

Sheet: /
File: SCA_board.kicad_sch

Title: StandaloneConnectorAdapter_board

Size: A3	Date: 2026-02-12	Rev: 0.1
KiCad E.D.A. 9.0.4		Id: 1/1