can

File: CAN.kicad_sch

inverter

File: Inverter.kicad_sch

mcu

File: MCU.kicad_sch

measurements

File: Measurements.kicad_sch

power

File: Power.kicad_sch

Sheet: /
File: BLDC_Test.kicad_sch

Title:

Size: A4	Date:	**Rev:**
KiCad E.D.A. 9.0.6		Id: #/6

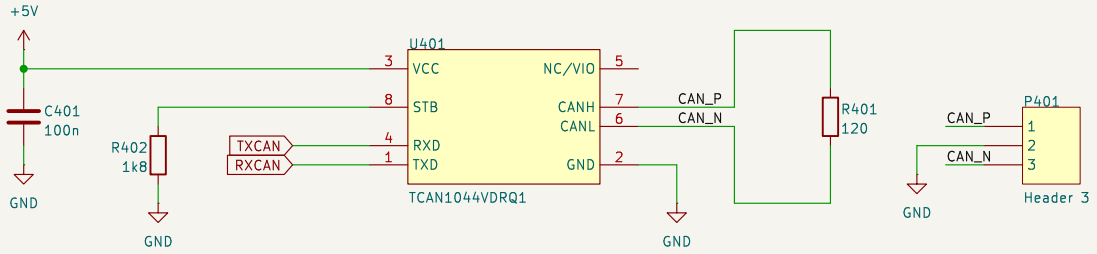

Sheet: /can/
File: CAN.kicad_sch

Title:

Size: A4	Date:	Rev:
KiCad E.D.A. 9.0.6		Id: 2/6

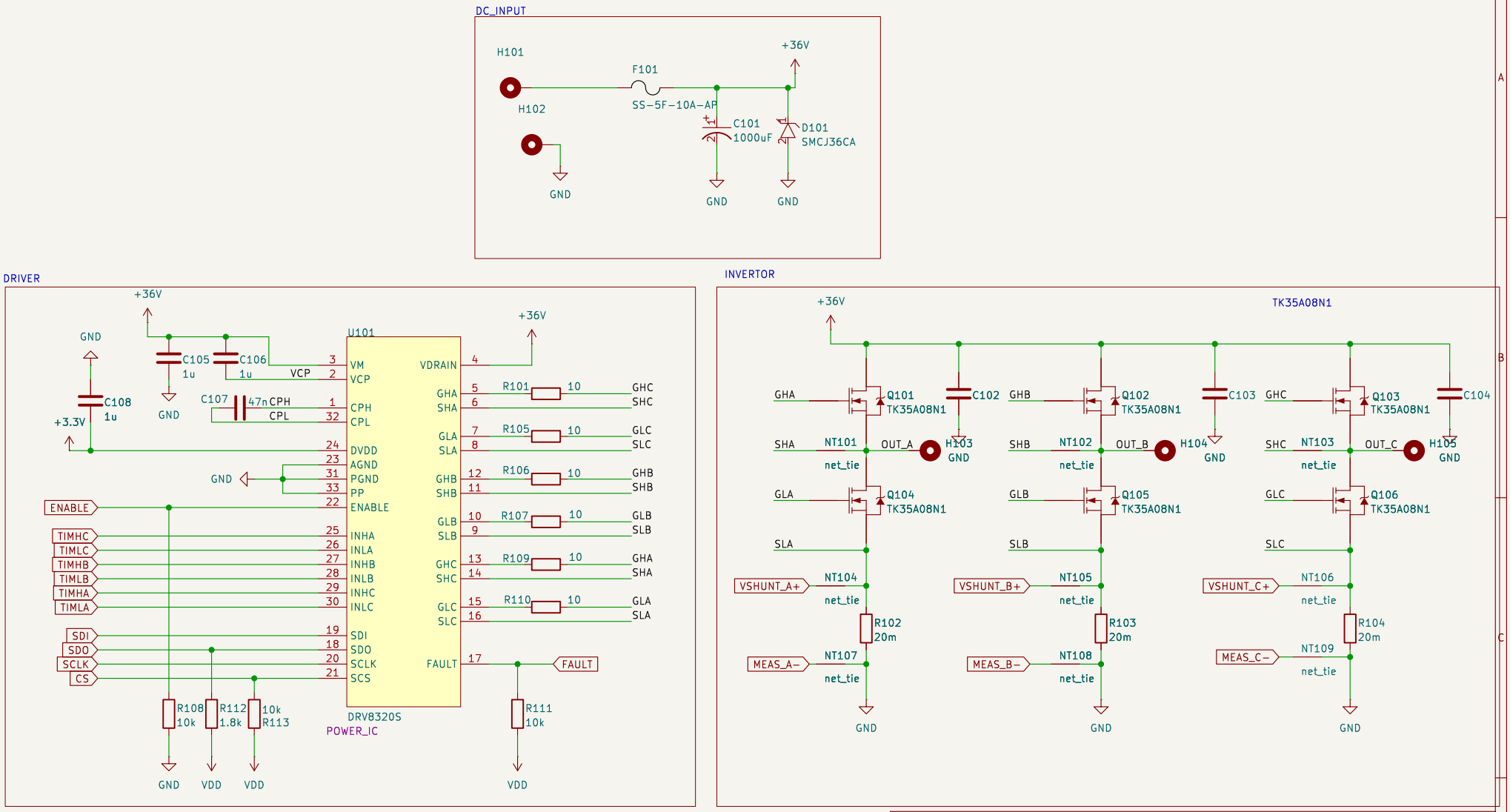

Sheet: /inverter/
File: Inverter.kicad_sch

Title:

Size: A4	Date:	Rev:
KiCad E.D.A. 9.0.6		Id: 3/6

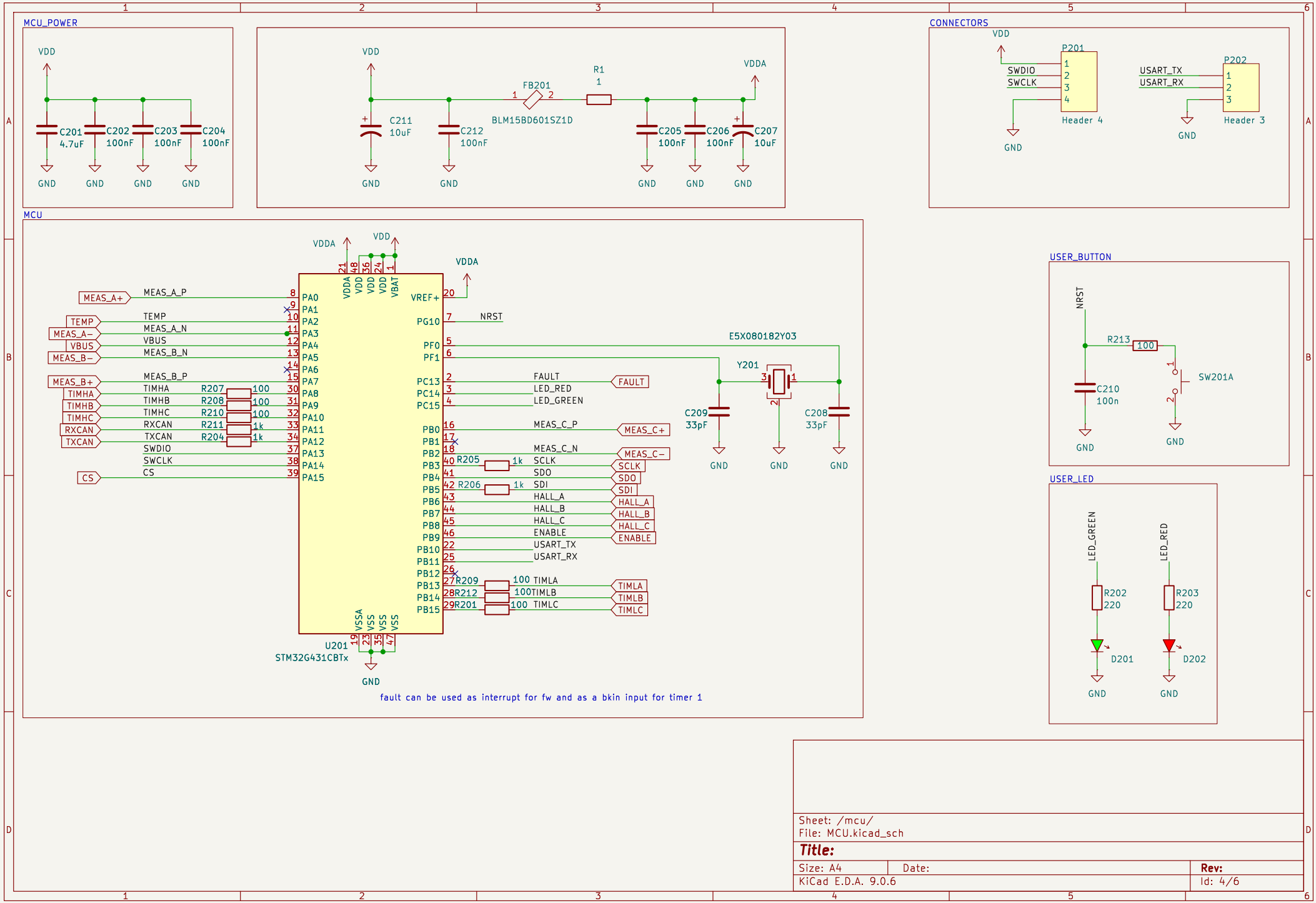

Sheet: /mcu/
File: MCU.kicad_sch

Title:

Size: A4	Date:	Rev:
KiCad E.D.A. 9.0.6		Id: 4/6

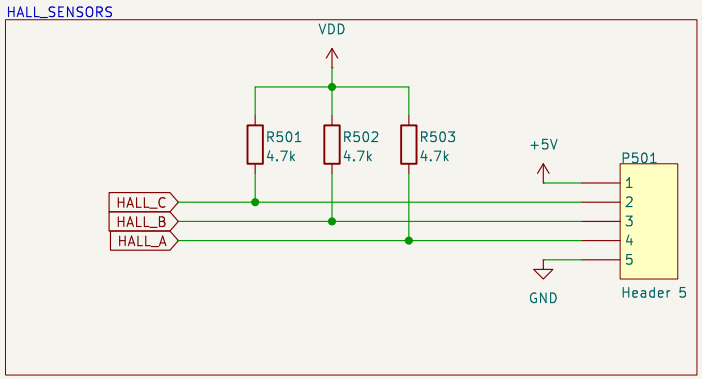

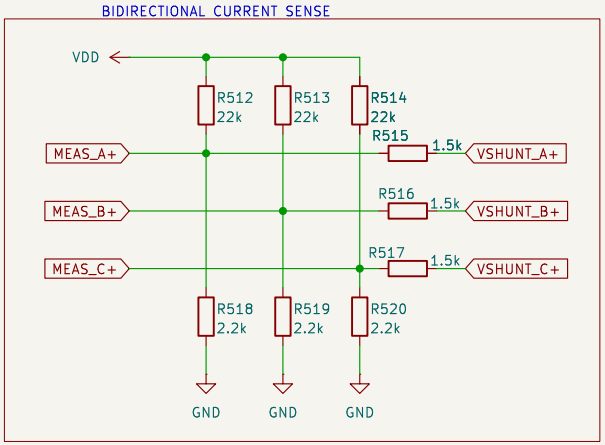

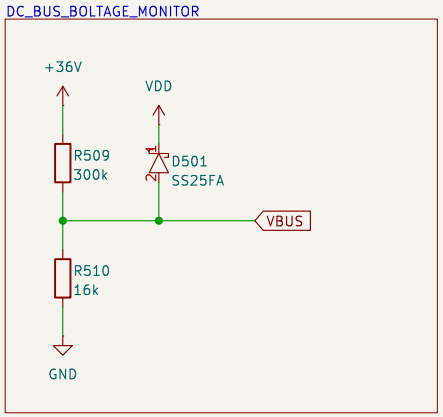

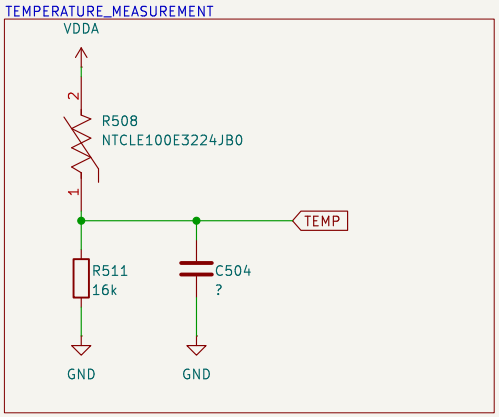

Sheet: /measurements/
File: Measurements.kicad_sch

Title:

Size: A4	Date:	**Rev:**
KiCad E.D.A. 9.0.6		Id: 5/6

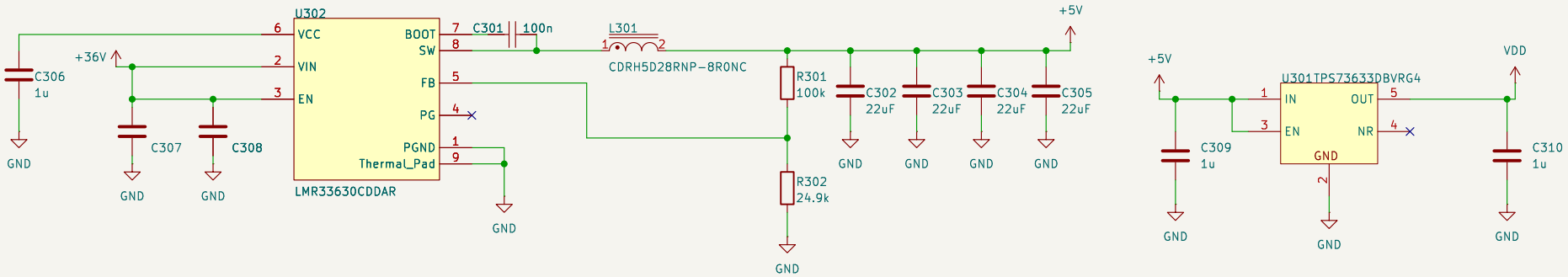

Sheet: /power/
File: Power.kicad_sch

Title:

Size: A4	Date:	Rev:
KiCad E.D.A. 9.0.6		Id: 6/6