Thales Canada, Transportation Solutions
105 Moatfield Drive, Suite 100,
Toronto, Ontario,
Canada
M3B 0A4
Tel. +1 416 742 3900
Fax. + 1 416 742 1136
www.thalesgroup.com

THALES ON-BOARD PLATFORM (TOP)

Hardware Item Requirements Specification (HwIRS) – Digital Inputs Module – Vital (DIM Vital)

THALES GROUP INTERNAL

Entity Identifier	Document Identifier	DTC	Revision	Customer ID with Revision
15900~9950	7HA-02919-AAAA-306EN	306	05	N/A
Legacy Identifier: *N/A*				

This document is not to be reproduced, modified, adapted, published, neither translated in any material form in whole or in part nor disclosed to any third party without the prior written permission of Thales. © THALES 2021 – All rights reserved.

Template: 83410477-DOC-CAN-EN-009

Follow-up of the evolutions

LOG OF CHANGES				
Revision	**Date**	**ECN #**	**Author**	**Modification**
001	**2012-02-15**	**CMCS**	**G. Ilie**	**First Edition**
002	**2012-07-03**	**CMCS**	**M. Becker**	**Traceability Updates**
003	**2014-10-06**	**CMCS**	**M. Becker**	**Traceability Updates**
004	**2020-08-28**	**CMCS**	**S. D'Alimonte**	**Traceability Updates** **Add front connector variants**
005	**2021-03-05**	**CMCS**	**S. D'Alimonte**	**Traceability Updates** **Add ESD Strip**

APPROVAL		
	Name & Role	
Written by	S. D'Alimonte HwARC	CMCS
Verified by	W. Sheng HwARC	CMCS
Approved by	G. Ilie HEM	CMCS

This document is not to be reproduced, modified, adapted, published, neither translated in any material form in whole or in part nor disclosed to any third party without the prior written permission of Thales. © THALES 2021 – All rights reserved.

CONTENTS

DOORS EXPORT 6

1. INTRODUCTION 8
   1.1 Document Number 9
   1.2 History 9
   1.3 Scope 10
      1.3.1 Intended Audience 11
      1.3.2 Instructions 11
      1.3.3 Evolution of the document 12
   1.4 References 13
      1.4.1 Referenced Documents 13
      1.4.2 Standards 13
   1.5 Definitions and abbreviations 13

2. OVERVIEW 15
   2.1 Product perspective 16
   2.2 Product functions 18
   2.3 Assumptions and dependencies 21

3. TECHNICAL REQUIREMENTS 22
   3.1 Functional requirements 22
      3.1.1 General Requirements 22
      3.1.2 Metallic in-series contact source; Functional Requirements 26
      3.1.3 Semiconductor based signal source; Functional Requirements 31
      3.1.4 Other requirements 35
   3.2 Physical requirements 36
      3.2.1 Mechanical, Packaging, Finishes 36
      3.2.2 Thermal Management 40
      3.2.3 Environmental 41

4. INTERFACES 45
   4.1 Signal Interfaces 45
   4.2 Man-Machine interfaces 49

5. PERSONNEL SAFETY 51

THALES GROUP INTERNAL

Entity Identifier	Document Identifier	DTC	Revision	Customer ID with Revision
15900~9950	7HA-02919-AAAA-306EN	306	05	N/A
Legacy Identifier: N/A				

This document is not to be reproduced, modified, adapted, published, neither translated in any material form in whole or in part nor disclosed to any third party without the prior written permission of Thales. © THALES 2021 – All rights reserved.

6. FUNCTIONAL SAFETY 52

7. SECURITY 54

8. SOFTWARE REQUIREMENTS 55

9. RELIABILITY (MTBF) 56

10. POWER SUPPLY 58

11. ECOLOGICAL 60

12. INDUSTRIALIZATION 61

13. QUALIFICATION AND TESTING 62

14. DIAGNOSIS & MAINTENANCE 63

15. DOCUMENTATION 64

16. OPEN ISSUES 65

This document is not to be reproduced, modified, adapted, published, neither translated in any material form in whole or in part nor disclosed to any third party without the prior written permission of Thales. © THALES 2021 – All rights reserved.

LIST OF TABLES

Table 1 – Export Configuration 6

LIST OF FIGURES

No table of figures entries found.

This document is not to be reproduced, modified, adapted, published, neither translated in any material form in whole or in part nor disclosed to any third party without the prior written permission of Thales. © THALES 2021 – All rights reserved.

Doors Export

The following sections (unless *EndOfDoorsExport* is reached) are extracted from Doors database by means of an adapted version of the Doors builtin facililty *Export to Word*. The export corresponds to the settings according to the following table.

DOORS	Version: DOORS 9.6.1.3 Data server: 36677@DOORS-STG
Module	/HW_CC/SRS/TOP-IRS/Digital Inputs Module - Vital
Baseline	5.2
View	Cds not lined up with export view [Complete] ! Column (Contents): ID(Object Identifier), Requirement_text(Object Text and Heading), Category(dito.), Allocation(dito.), Priority(dito.), Safety(dito.), Verification(dito.), Comment(dito.), ~Coverage_ID(Coverage_ID), No_Out-Links(dito.) Filter: no filter active ! Number of Objects: 198
Export Script	TRSS Helpers\scripts\Exporter\word\\doWordExport.dxldoWordExport.dxl Version: v01.09 Flags: includeHeadingNumbers[false] issueWarnings[false] includeEmptyAttributes[false] useParaStyle[true] useDxlColumn[true] hideDxlColumn[true] doStyleMapping[false] ignoreDOORSTableBorders[false] autoformatTableOutput[false] useNormalTemplate[false] useHorizontalLines[false] wordUseBookmarks[true] wordUseModuleInfo[true] reloadView[false] saveEveryNObjects[false]
Project Template	

Table 1 – Export Configuration

This document is not to be reproduced, modified, adapted, published, neither translated in any material form in whole or in part nor disclosed to any third party without the prior written permission of Thales. © THALES 2021 – All rights reserved.

(Start Of Doors Export)

This document is not to be reproduced, modified, adapted, published, neither translated in any material form in whole or in part nor disclosed to any third party without the prior written permission of Thales. © THALES 2021 – All rights reserved.

1. INTRODUCTION

HW-IRS_DIM_VI_275

The DIM (Digital Input Module) is a part of Thales On-board Platform (TOP) library of I/O modules. It is used by Urban Rail and Main Line on-board equipment (also referred as System in this document) for interfacing vital and non-vital external digital elements from the Train Installation (also referred as Plant in this document).

Category: Background
Allocation: HW
Priority: NA
Safety: NA
Verification: NA

NA

HW-IRS_DIM_VI_276

The DIM follows the general TOP module architecture being composed by two board assemblies (BA): the generic I/O Microcontroller Daughter Board and the application specific board, in this case the Digital Input Interface Board Assembly (DII).

According to [7], the module referred as DIM in this document is a Functional Unit.

When referring the functional aspects, the I/O Microcontroller Daughter Board will be also referred as I/O Processor in this document.

Category: Background
Allocation: HW
Priority: NA
Safety: NA
Verification: NA
NA

HW-IRS_DIM_VI_310

The one purpose of this document is to specify hardware requirements for development of the DII Board based on the requirements from TOP FMDD [8] and TOP HW-ADD [2].

Category: Background
Allocation: HW

This document is not to be reproduced, modified, adapted, published, neither translated in any material form in whole or in part nor disclosed to any third party without the prior written permission of Thales. © THALES 2021 – All rights reserved.

Priority: NA
Safety: NA
Verification: NA
NA

HW-IRS_DIM_VI_311

The other purpose of this document is to specify SW/FW requirements regarding HW specific functions across the Functional Unit (Module).

Category: Background
Allocation: HW
Priority: NA
Safety: NA
Verification: NA
NA

1.1 DOCUMENT NUMBER

HW-IRS_DIM_VI_80

Document number: 7HA 02919 AAAA-306-EN

Category: Background
Allocation: HW
Priority: NA
Safety: NA
Verification: NA
NA

1.2 HISTORY

HW-IRS_DIM_VI_313

Ed.	*Doors*	*Date*	*Author*	*Changes*
01P01	*0.1*	*24.01.2012*	*Gabriel Ilie*	*First Draft*
01P02	*0.2*	*08.02.2012*	*Gabriel Ilie*	*Comments incorporated*
01	*1.0*	*14.02.2012*	*Gabriel Ilie*	*Release*
02P01	*1.0*	*12.06.2012*	*Gabriel Ilie*	*Completing coverage to FMDD*
02	*1.1*	*12.06.2012*	*Gabriel Ilie*	*Release*

This document is not to be reproduced, modified, adapted, published, neither translated in any material form in whole or in part nor disclosed to any third party without the prior written permission of Thales. © THALES 2021 – All rights reserved.

03P01	*2.1*	*25.09.2014*	*D.Praisler*	*All synchronized. Reqtify OK. Ready for release, Removed SW requirements after CMCS review*
03	*3.0*	*06.10.2014*	*S.Kniazev*	*Release*
	4.0	*30.11.2018*	*O.Stan*	*Updated coverage tags*
04P01	*4.1*	*25-06-2019*	*S. D'Alimonte*	*Add 7HA-04924-XXXX variants*
04P02	*4.2*	*26-06-2019*	*S. D'Alimonte*	*Updates from peer review*
05	*5.2*	*05-03-2021*	*S. D'Alimonte*	*Traceability updates* *Add ESD strip*

Category: Background
Allocation: NA
Priority: NA
Safety: NA
Verification: NA
NA

1.3 SCOPE

HW-IRS_DIM_VI_277

The one scope of this document is the set of hardware requirements for development of the DOI Board Assembly.

Category: Background
Allocation: NA
Priority: NA
Safety: NA
Verification: NA
NA

HW-IRS_DIM_VI_314

The other area in the scope of this document is to provide all the necessary hardware requirements for testing and qualification of the DIM Module (or Functional Unit).

Category: Background
Allocation: NA
Priority: NA
Safety: NA

This document is not to be reproduced, modified, adapted, published, neither translated in any material form in whole or in part nor disclosed to any third party without the prior written permission of Thales. © THALES 2021 – All rights reserved.

Verification: NA
NA

HW-IRS_DIM_VI_315

The requirements for the I/O Microcontroller daughterboard are captured in a separate HW-IRS document [4] (**7HA 02990 AAAA 306EN)**.

Category: Background
Allocation: NA
Priority: NA
Safety: NA
Verification: NA
NA

1.3.1 Intended Audience

HW-IRS_DIM_VI_316

•TOP Product Management;

•Systems;

•Safety;

•RAM;

•Software;

•HW Competence Center.

Category: Background
Allocation: NA
Priority: NA
Safety: NA
Verification: NA
NA

1.3.2 Instructions

HW-IRS_DIM_VI_318

For the structure of the requirements refer to the Requirement Management Plan. Technical Requirements denoted as 'Safety' indicate those requirements on which the safety of the system depends. These requirements must be able to be verified by testing, analysis, or a combination of the two.

The column "Verification" indicates a method of verification as one or more of the following:

This document is not to be reproduced, modified, adapted, published, neither translated in any material form in whole or in part nor disclosed to any third party without the prior written permission of Thales. © THALES 2021 – All rights reserved.

Test: All testable requirements will be validated by board level testing where the test results can be used to arrive at a definite conclusion.

Inspection: Any requirement which can be validated by visual observation or through verification checks of related artifacts.

Analysis: Any requirement which can be validated by theoretical calculations, review of schematics, data sheets, simulations, measurements etc.

Demonstration: Any requirement which can be demonstrated within a simulated environment;

NA: Not applicable

Category: Definition
Allocation: NA
Priority: NA
Safety: NA
Verification: NA
NA

1.3.3 Evolution of the document

HW-IRS_DIM_VI_320

The document is issued before the hardware design phase starts and, if necessary, will be updated upon changes of features or subsystem requirements.

Category: Background
Allocation: NA
Priority: NA
Safety: NA
Verification: NA
NA

This document is not to be reproduced, modified, adapted, published, neither translated in any material form in whole or in part nor disclosed to any third party without the prior written permission of Thales. © THALES 2021 – All rights reserved.

1.4 REFERENCES

1.4.1 Referenced Documents

HW-IRS_DIM_VI_272

[1] 7HA-02990-0010-305EN - TOP SRS

[2] 7HA-02990-0018-434EN - TOP HW-ADD

[3] 7HA-02990-0019-959EN - TOP Isolation Coordination

[4] 7HA-02990-AAAA-306EN - I/O Microcontroller Daughterboard

[5] 8DC-01043-0001-521EN - Component Derating Requirements

[6] 7HA-02990-0001-931EN - TOP Documentation Plan

[7] 8DC-01063-1000-TQAFA - Standard Configuration Structure in Electronic Development

[8] 3CU-04016-0031-549EN - TOP FMDD, Functional Module Requirements and Design Document

Category: Background
Allocation: NA
Priority: NA
Safety: NA
Verification: NA
NA

1.4.2 Standards

HW-IRS_DIM_VI_323

N/A

Category: Background
Allocation: NA
Priority: NA
Safety: NA
Verification: NA
NA

1.5 DEFINITIONS AND ABBREVIATIONS

This document is not to be reproduced, modified, adapted, published, neither translated in any material form in whole or in part nor disclosed to any third party without the prior written permission of Thales. © THALES 2021 – All rights reserved.

Term / Abbreviation	Description / Meaning
2oo2	2 out of 2 redundancy configuration
ADD	Architectural Design Description
CAN	Controller Area Network (communication bus)
DIM	Digital Input Module
HP	Horizontal Pitch (1HP=5.08mm)
HW	Hardware
ID	Identification
IRS	Item Requirements Specification
I/O	Input/ Output
LFD	Latent Failure Detection
SRS	System Requirements Specification
SW	Software
TOP	Thales On-board Platform

This document is not to be reproduced, modified, adapted, published, neither translated in any material form in whole or in part nor disclosed to any third party without the prior written permission of Thales. © THALES 2021 – All rights reserved.

2. OVERVIEW

HW-IRS_DIM_VI_278

The DIM Vital Module is used in the on-board equipment for interfacing external digital inputs. It is compatible with the TOP internal CAN communication interface and is designed for use in the TOP standardized I/O slot. The module consists of the following two boards:

- Digital Input Interface board assembly as Main Board;

- IO Processor Board as Daughter Board.

Category: Background
Allocation: NA
Priority: NA
Safety: NA
Verification: NA
NA

HW-IRS_DIM_VI_360

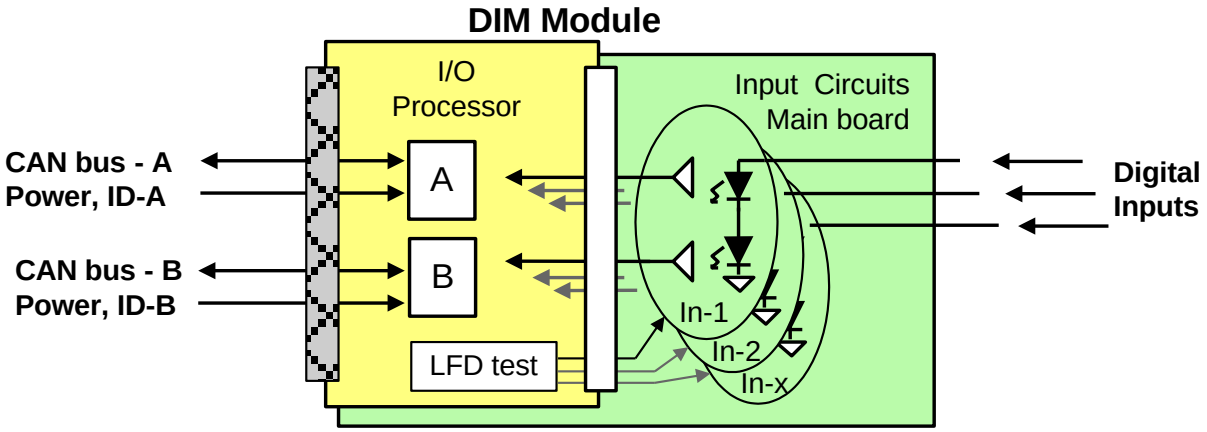

Category: Picture
Allocation: HW
Priority: NA
Safety: NA
Verification: NA
NA

This document is not to be reproduced, modified, adapted, published, neither translated in any material form in whole or in part nor disclosed to any third party without the prior written permission of Thales. © THALES 2021 – All rights reserved.

HW-IRS_DIM_VI_361

The DIM module has two independent Circuit Replicas, including circuit interfaces and local processing units, for acquiring status of the input signals and communicating it to the main CPUs.

Category: Background
Allocation: NA
Priority: NA
Safety: NA
Verification: NA
NA

2.1 PRODUCT PERSPECTIVE

HW-IRS_DIM_VI_273

The DIM Vital module is designed for use in the TOP based equipment together with other I/O modules. It can be installed in any TOP standardized I/O slots of the TOP subracks. The figure below shows the DIM Vital module in the context of the TOP architecture.

Category: Background
Allocation: NA
Priority: NA
Safety: NA
Verification: NA
NA

This document is not to be reproduced, modified, adapted, published, neither translated in any material form in whole or in part nor disclosed to any third party without the prior written permission of Thales. © THALES 2021 – All rights reserved.

HW-IRS_DIM_VI_362

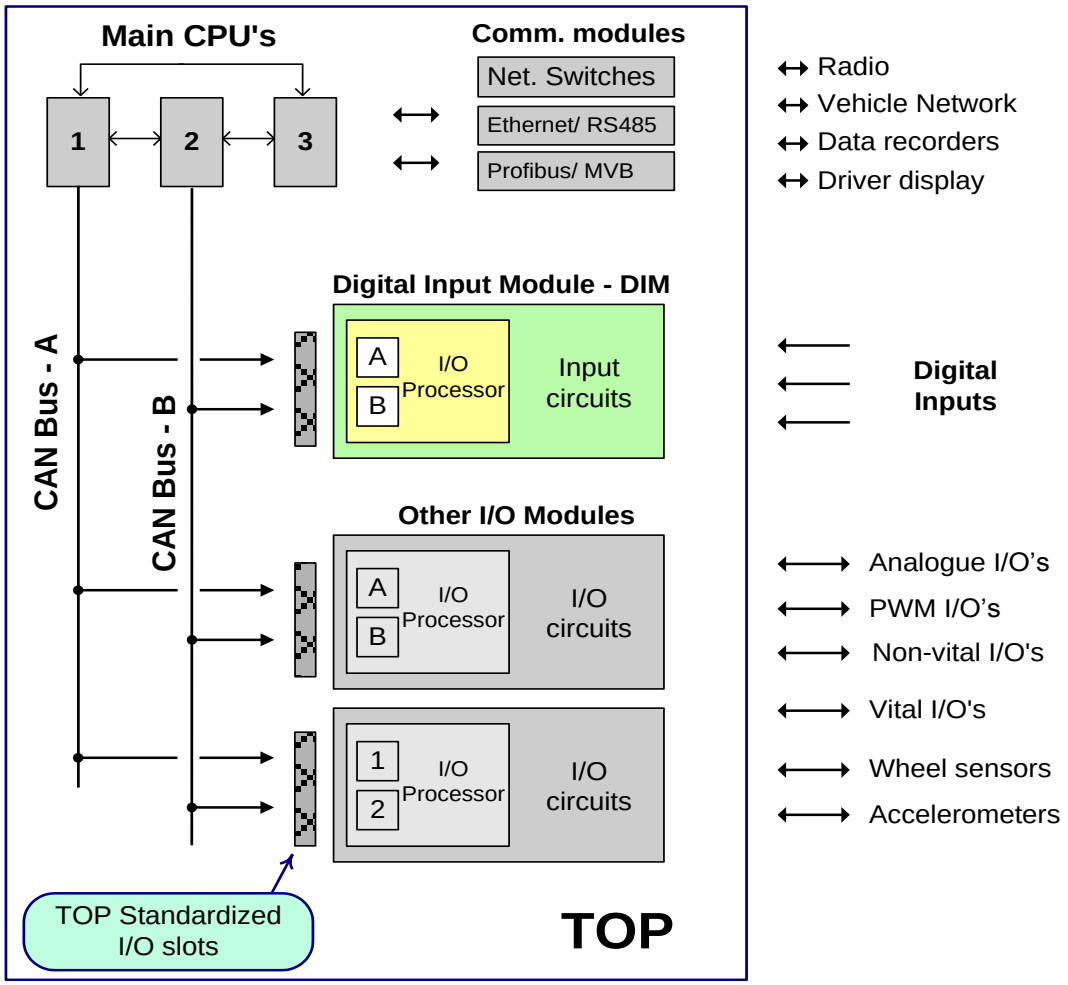

Category: Picture
Allocation: HW
Priority: NA
Safety: NA
Verification: NA
NA

HW-IRS_DIM_VI_363

The DIM can be used in 2oo2 I/O configuration (where external inputs are connected to one DIM module) and in 2x2oo2 configurations for increased system availability (where external inputs are connected to two DIM Vital modules in parallel).

This document is not to be reproduced, modified, adapted, published, neither translated in any material form in whole or in part nor disclosed to any third party without the prior written permission of Thales. © THALES 2021 – All rights reserved.

Category: Background
Allocation: NA
Priority: NA
Safety: NA
Verification: NA
NA

2.2 PRODUCT FUNCTIONS

HW-IRS_DIM_VI_274

The module, in its main variants performs status acquisition of external digital input signals produced by in-series metallic contacts of electromechanical relays or other elements, as in the following reference drawing in 364:

Category: Background
Allocation: NA
Priority: NA
Safety: NA
Verification: NA
NA

HW-IRS_DIM_VI_364

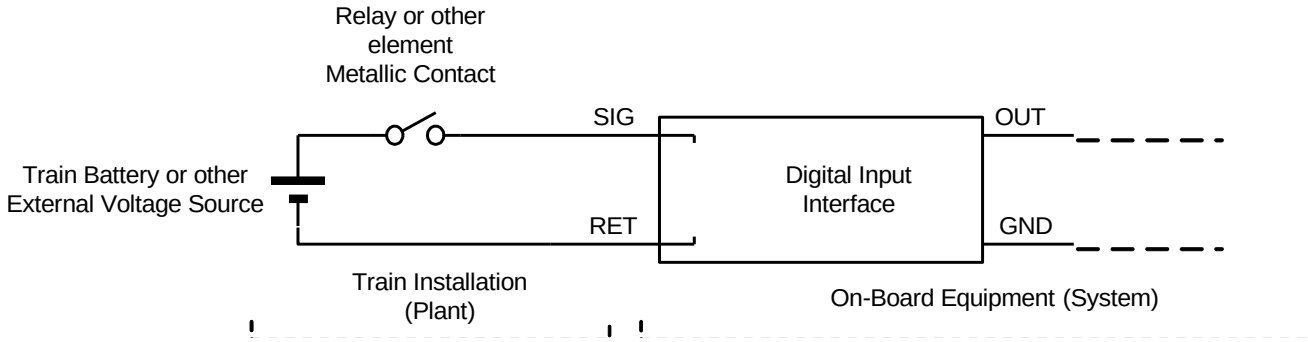

Category: Picture
Allocation: HW
Priority: NA
Safety: NA
Verification: NA
NA

This document is not to be reproduced, modified, adapted, published, neither translated in any material form in whole or in part nor disclosed to any third party without the prior written permission of Thales. © THALES 2021 – All rights reserved.

HW-IRS_DIM_VI_366

The module, in its additional variants performs status acquisition of fast (hundreds of microseconds) external digital input signals produced by 24V semiconductor type digital outputs. The reference circuit is presented by the drawing in 367:

Category: Background
Allocation: NA
Priority: NA
Safety: NA
Verification: NA
NA

This document is not to be reproduced, modified, adapted, published, neither translated in any material form in whole or in part nor disclosed to any third party without the prior written permission of Thales. © THALES 2021 – All rights reserved.

HW-IRS_DIM_VI_367

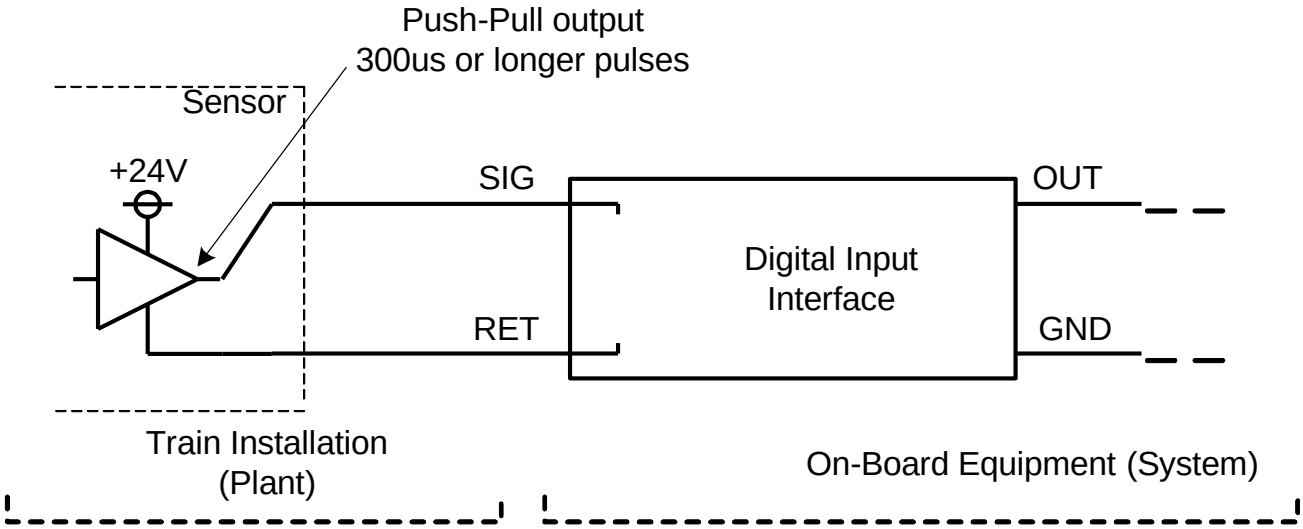

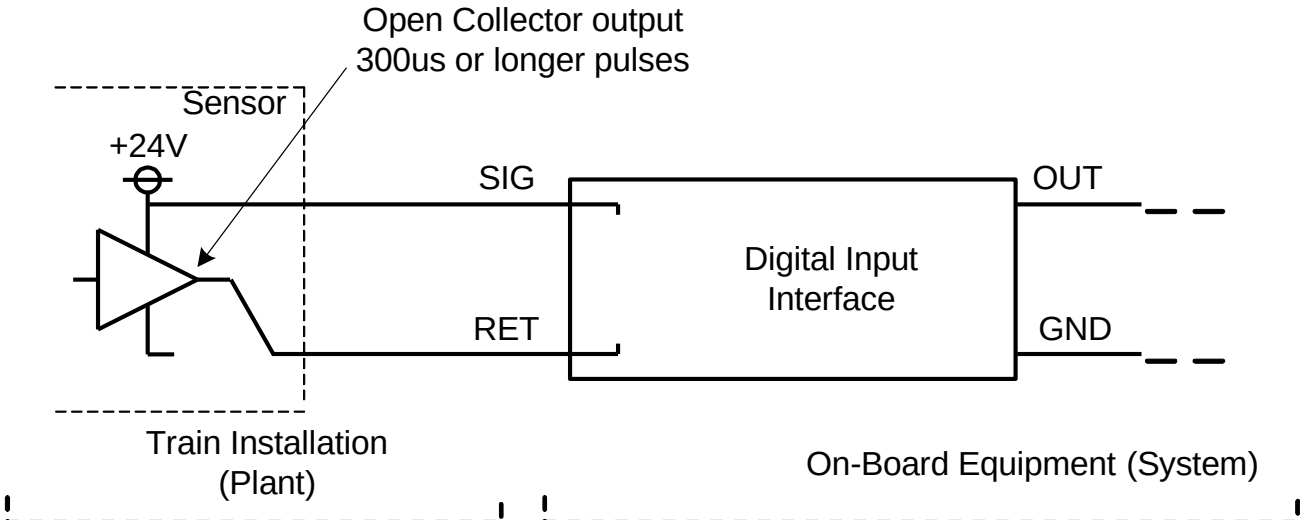

Category: Picture
Allocation: HW
Priority: NA
Safety: NA
Verification: NA
NA

THALES GROUP INTERNAL

Entity Identifier	Document Identifier	DTC	Revision	Customer ID with Revision
15900~9950	7HA-02919-AAAA-306EN	306	05	N/A
Legacy Identifier: N/A				

This document is not to be reproduced, modified, adapted, published, neither translated in any material form in whole or in part nor disclosed to any third party without the prior written permission of Thales. © THALES 2021 – All rights reserved.

HW-IRS_DIM_VI_368

The module performs status acquisition of external digital inputs as vital and/or non vital function.

Category: Background
Allocation: NA
Priority: NA
Safety: NA
Verification: NA
NA

2.3 ASSUMPTIONS AND DEPENDENCIES

HW-IRS_DIM_VI_280

The defined safety levels of the DIM module require the I/O Processor to perform the latent failure detection tests when DIM is used in a Vital configuration.

Category: Background
Allocation: NA
Priority: NA
Safety: NA
Verification: NA
NA

This document is not to be reproduced, modified, adapted, published, neither translated in any material form in whole or in part nor disclosed to any third party without the prior written permission of Thales. © THALES 2021 – All rights reserved.

3. TECHNICAL REQUIREMENTS

3.1 FUNCTIONAL REQUIREMENTS

3.1.1 General Requirements

HW-IRS_DIM_VI_371

The module shall provide HW support for the Digital Input acquisition function, which is to determine the status of discrete digital inputs and provide the acquisition result to the main CPUs over CAN communication bus.

Category: Requirement
Allocation: HW
Priority: Mandatory
Safety: No
Verification: Analysis
[HWADD:TOP:0012]

HW-IRS_DIM_VI_373

The DIM module shall implement the input channels as independent circuits so the following internal structures are be possible:

- 2002 check redundant architecture as defined in TOP HW-ADD [2];

- independent 1oo1 internal architecture as defined in TO HW-ADD [2];

Category: Requirement
Allocation: HW
Priority: Mandatory
Safety: Yes
Verification: Analysis
[HWADD:TOP:0013]

HW-IRS_DIM_VI_374

In vital configuration (2oo2) each discrete Plant input signal shall be read by two independent Input Circuits (refer to picture in 387).

Category: Requirement
Allocation: HW
Priority: Mandatory
Safety: Yes
Verification: Analysis

This document is not to be reproduced, modified, adapted, published, neither translated in any material form in whole or in part nor disclosed to any third party without the prior written permission of Thales. © THALES 2021 – All rights reserved.

[TOP:FMDD:1500]
[TOP:FMDD:1520]

HW-IRS_DIM_VI_484

In nonvital configuration (1oo1) each discrete Plant input channel shall be read by only one Input Circuit (refer to picture in 388).

Category: Requirement
Allocation: HW
Priority: Mandatory
Safety: Yes
Verification: Analysis
[TOP:FMDD:1500]
[TOP:FMDD:1520]

HW-IRS_DIM_VI_375

Each Input Circuit output shall be read by both I/O Processor replica.

Category: Requirement
Allocation: HW
Priority: Mandatory
Safety: Yes
Verification: Analysis
[HWADD:TOP:0012]

HW-IRS_DIM_VI_377

The DIM module shall accommodate eight (8) input channels when used in Vital Configuration.

Category: Requirement
Allocation: HW
Priority: Mandatory
Safety: No
Verification: Analysis
[HWADD:TOP:0012]

HW-IRS_DIM_VI_378

The DIM module design shall accommodate sixteen (16) input channels when used in Non-Vital Configuration.

Category: Requirement
Allocation: HW
Priority: Mandatory
Safety: No
Verification: Analysis

This document is not to be reproduced, modified, adapted, published, neither translated in any material form in whole or in part nor disclosed to any third party without the prior written permission of Thales. © THALES 2021 – All rights reserved.

[HWADD:TOP:0012]

HW-IRS_DIM_VI_379

The DIM module shall accommodate any combination of vital and non-vital inputs within the available number of circuits.

Category: Requirement
Allocation: HW
Priority: Mandatory
Safety: No
Verification: Analysis
[HWADD:TOP:0012]

HW-IRS_DIM_VI_382

Input Circuits of DII (refer to picture in 387) shall have a voltage threshold type transfer function as protection against invalid DC signals and AC induced Plant noise.

Category: Requirement
Allocation: HW
Priority: Mandatory
Safety: Yes
Verification: Analysis
[HWADD:TOP:0012]
[TOP:FMDD:1492]
[TOP:FMDD:1939]

HW-IRS_DIM_VI_383

Input Circuits DII (refer to picture in 387) shall have a low pass filter type transfer function as protection against AC induced Plant noise.

Category: Requirement
Allocation: HW
Priority: Mandatory
Safety: Yes
Verification: Analysis
[TOP:FMDD:1501]

HW-IRS_DIM_VI_390

The internal architecture of the DII shall follow the concept depicted in the 387 and 389.

Category: Requirement
Allocation: HW
Priority: Mandatory

This document is not to be reproduced, modified, adapted, published, neither translated in any material form in whole or in part nor disclosed to any third party without the prior written permission of Thales. © THALES 2021 – All rights reserved.

Safety: Yes
Verification: Analysis
[HWADD:TOP:0012]

HW-IRS_DIM_VI_387

Two functionally identical replica input circuits are wired in parallel to form one vital channel.

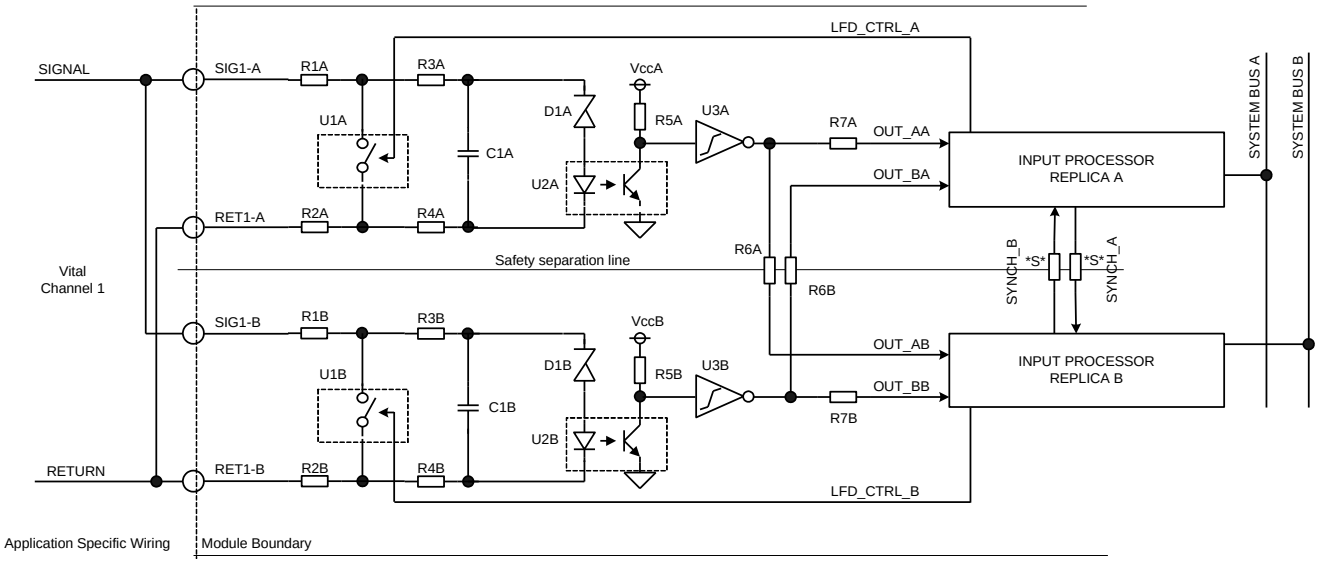

Category: Picture
Allocation: HW
Priority: NA
Safety: NA
Verification: NA
NA

This document is not to be reproduced, modified, adapted, published, neither translated in any material form in whole or in part nor disclosed to any third party without the prior written permission of Thales. © THALES 2021 – All rights reserved.

HW-IRS_DIM_VI_389

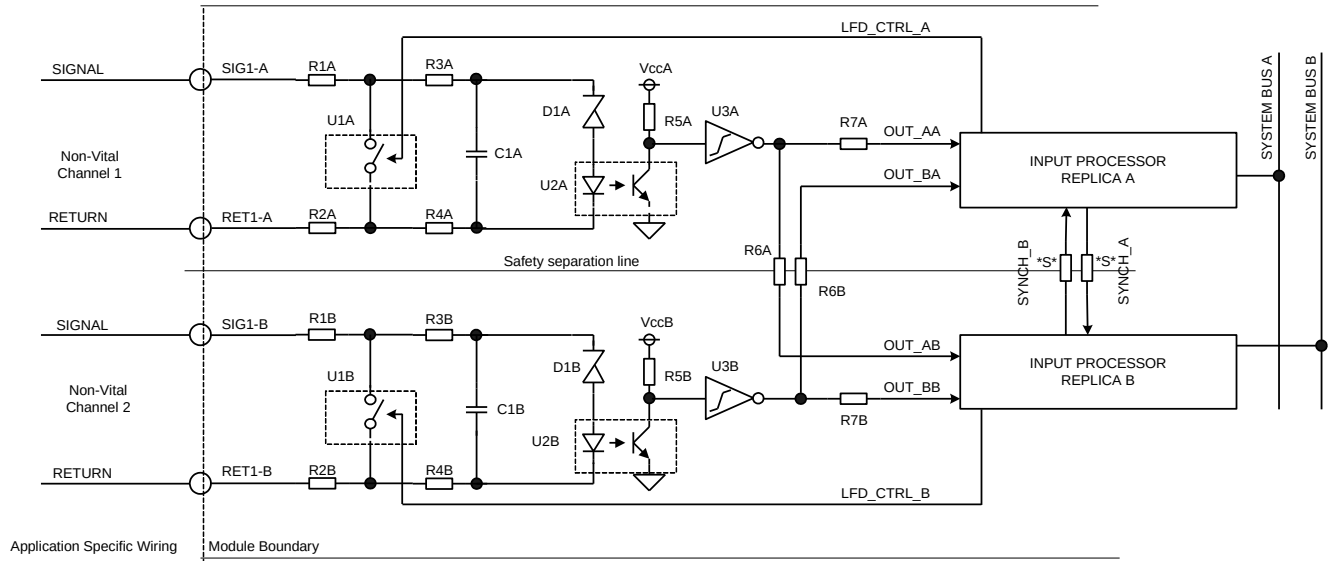

Two functionally identical circuits are wired separately to form two non-vital individual channels.

Category: Picture
Allocation: HW
Priority: NA
Safety: NA
Verification: NA
NA

3.1.2 Metallic in-series contact source; Functional Requirements

HW-IRS_DIM_VI_376

The DIM module shall provide the wetting current (self cleaning current for the Plant relay contacts) function by implementing the concept described in TOP FMDD [8].

Category: Requirement
Allocation: HW
Priority: Mandatory
Safety: No
Verification:
Analysis
Test
[TOP:FMDD:1509]
[TOP:FMDD:1514]

This document is not to be reproduced, modified, adapted, published, neither translated in any material form in whole or in part nor disclosed to any third party without the prior written permission of Thales. © THALES 2021 – All rights reserved.

No_Out-Links: Requirement based on common practices, experience or architectural decision

HW-IRS_DIM_VI_384

Input circuits shall provide Latent Failure Detection (LFD) test capabilities for protection against component failures, component values changes or any other failures on the board, which can result in the following non self-revealing faults:

a) Input “High” threshold level decrease;

b) Low pass filtering time constant decrease;

c) False input status transition from “Low” to “High”;

d) Status lock-up in “High” state after input transition from “High” to “Low”;

Short circuit to any other “High” state circuit on the board.

Category: Requirement
Allocation: HW
Priority: Mandatory
Safety: Yes
Verification: Analysis
[HWADD:TOP:0012]
[TOP:FMDD:1558]
[TOP:FMDD:3974]

HW-IRS_DIM_VI_392

Based on Plant voltage, there shall be three main variants of the DII:

Variant 1: Input circuit supports 24V and 36V nominal voltages;

Variant 2: Input circuit supports 48V and 72V nominal voltages;

Variant 3: Input circuit supports 96V and 110V nominal voltages;

Category: Requirement
Allocation: HW
Priority: Mandatory
Safety: No
Verification: Analysis

This document is not to be reproduced, modified, adapted, published, neither translated in any material form in whole or in part nor disclosed to any third party without the prior written permission of Thales. © THALES 2021 – All rights reserved.

[HWADD:TOP:0014]
[HWADD:TOP:0017]
[TOP:FMDD:1492]

HW-IRS_DIM_VI_393

The three DII main variants shall be implemented as BOM variants.

Category: Requirement
Allocation: HW
Priority: Mandatory
Safety: No
Verification: Analysis
[HWADD:TOP:0017]

HW-IRS_DIM_VI_394

The three DII main variants shall be implemented using one common PCB layout.

Category: Requirement
Allocation: HW
Priority: Mandatory
Safety: No
Verification: Analysis
[HWADD:TOP:0017]

HW-IRS_DIM_VI_395

According to the voltage variant, the thresholds, input current and time constant of the DII shall comply with the specification shown in the table in 396, with the timing definition in 398 and with the reference schematic in 364.

Category: Requirement
Allocation: HW
Priority: Mandatory
Safety: Yes
Verification: Test
[HWADD:TOP:0012]
[TOP:FMDD:1501]
[TOP:FMDD:1492]
[TOP:FMDD:1939]

This document is not to be reproduced, modified, adapted, published, neither translated in any material form in whole or in part nor disclosed to any third party without the prior written permission of Thales. © THALES 2021 – All rights reserved.

HW-IRS_DIM_VI_396

Board Variant	Plant Voltage			Threshold for "High"	Threshold for "Low"	Hysteresis	Target Input Current (nom. conditions)		t_{ON}	t_{OFF}
	Min. (-30%)	Nom.	Max. (+25%)	Max.	Min.	Typ.	Typ.			
	[V]	[V]	[V]	[V]	[V]	[V]	[mA]	[mA]	[ms]	[ms]
				LFD OFF	LFD OFF	LFD OFF	LFD ON	LFD OFF	LFD OFF	LFD OFF
1	16.8	24	30	15	6	0.5	20	4	max 12	
	25.2	36	45				30	7.7	min. 1	max 0.5
2	33.6	48	60	30	12	0.7	15	3	max 12	
	50.4	72	90				22.5	5.7	min 1	max 0.5
3	67.2	96	120	60	24	1	10	2	max 12	
	77	110	137.5				11.5	2.5	min1	max 0.5

Note: The difference between threshold for “High” and threshold for “Low” provides room for component tolerances, aging and temperature. This range includes but it is not circuit hysteresis.

Category: Requirement
Allocation: HW
Priority: Mandatory
Safety: Yes
Verification: Test
[TOP:FMDD:1492]
[TOP:FMDD:1501]
[TOP:FMDD:1503]

This document is not to be reproduced, modified, adapted, published, neither translated in any material form in whole or in part nor disclosed to any third party without the prior written permission of Thales. © THALES 2021 – All rights reserved.

HW-IRS_DIM_VI_398

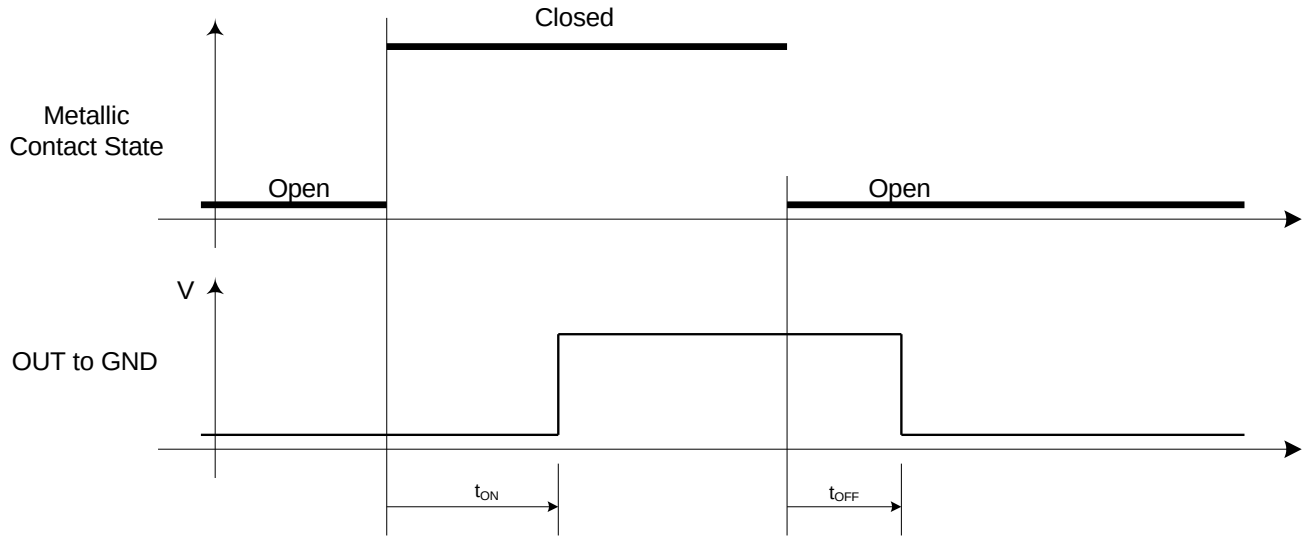

Notes:

1. t_{ON} is defined in the context of picture in 364 with the input circuit fully discharged. Min. and Max. values in 396 are induced by Plant voltage, component tolerances, aging and temperature.

2. t_{OFF} is defined in the context of picture in 364 with the input circuit fully charged. Max. values in 396 are induced by Plant voltage, component tolerances, aging and temperature.

3. It is known that a good quality test signal is difficult to achieve using electromechanical relays; mechanical bouncing is expected so a meaningful measurement may not be possible. Therefore for testing, including qualification, the test signal labelled ”Metallic Contact State” should be emulated with a semiconductor switch (FET, BJT) replacing the metallic contact from picture in 364. The ON resistance shall be less than 1Ohm. The OFF state resistance shall be at least 1MOhm. The ON, OFF transition times shall be less than 10us.

Category: Picture
Allocation: HW
Priority: NA
Safety: NA
Verification: NA
NA

This document is not to be reproduced, modified, adapted, published, neither translated in any material form in whole or in part nor disclosed to any third party without the prior written permission of Thales. © THALES 2021 – All rights reserved.

3.1.3 Semiconductor based signal source; Functional Requirements

HW-IRS_DIM_VI_400

The DIM module, in its additional variants shall be able to acquire 0V/24V fast digital input signals generated by semiconductor based sources.

Note: this is HW support for Time Sensitive Inputs

Category: Requirement
Allocation: HW
Priority: Mandatory
Safety: No
Verification: Analysis
[HWADD:TOP:0014]
[HWADD:TOP:0017]

HW-IRS_DIM_VI_406

The DIM shall be able to capture and acquire semiconductor based digital signals that remain in logical state of “High” (24V) for 300us or longer.

Category: Requirement
Allocation: HW
Priority: Mandatory
Safety: No
Verification: Test
[HWADD:TOP:0014]
[HWADD:TOP:0017]

HW-IRS_DIM_VI_401

To improve on functional granularity, the additional 24V fast variants shall be also carrying metallic interfacing circuits.

Category: Requirement
Allocation: HW
Priority: Mandatory
Safety: No
Verification: Analysis
[HWADD:TOP:0014]
[HWADD:TOP:0017]

HW-IRS_DIM_VI_402

Based on Plant voltage, there shall be three additional variants of the DII supporting :

This document is not to be reproduced, modified, adapted, published, neither translated in any material form in whole or in part nor disclosed to any third party without the prior written permission of Thales. © THALES 2021 – All rights reserved.

Variant 4: 12 Input channels supporting 24V and 36V metallic interfacing circuits;

4 Input channels supporting 24V fast semiconductor sources;

Variant 5: 12 Input circuits supporting 48V and 72V metallic interfacing circuits;

4 Input Circuits supporting 24V fast semiconductor sources;

Variant 6: 12 Input circuits supporting 96V and 110V metallic interfacing circuits;

4 Input Circuits supporting 24V fast semiconductor sources;

Category: Requirement
Allocation: HW
Priority: Mandatory
Safety: No
Verification: Analysis
[HWADD:TOP:0014]
[HWADD:TOP:0017]

HW-IRS_DIM_VI_403

The three additional variants, 4 to 6, shall be implemented as BOM variants.

Category: Requirement
Allocation: HW
Priority: Mandatory
Safety: No
Verification: Analysis
[HWADD:TOP:0014]
[HWADD:TOP:0017]

HW-IRS_DIM_VI_404

The three additional variants shall be implemented using the same layout as the three main variants described in 3.1.1.

Category: Requirement
Allocation: HW
Priority: Mandatory

This document is not to be reproduced, modified, adapted, published, neither translated in any material form in whole or in part nor disclosed to any third party without the prior written permission of Thales. © THALES 2021 – All rights reserved.

Safety: No
Verification: Analysis
[HWADD:TOP:0014]
[HWADD:TOP:0017]

HW-IRS_DIM_VI_405

The metallic interfacing circuits of the additional variants shall comply with all the requirements described in 3.1.1.

Category: Requirement
Allocation: HW
Priority: Mandatory
Safety: No
Verification: Analysis
[HWADD:TOP:0014]
[HWADD:TOP:0017]

HW-IRS_DIM_VI_407

The 24V fast semiconductor interfacing circuits shall comply with the specification given in the table in 408 with consideration for timing definition in 409:

Category: Requirement
Allocation: HW
Priority: Mandatory
Safety: No
Verification: Test
[HWADD:TOP:0014]
[HWADD:TOP:0017]

HW-IRS_DIM_VI_408

Threshold for "High" VthH	Threshold for "Low" VthL	Hysteresis	Input Current (nominal conditions)	t_{ON}	t_{OFF}
Max.	Min.	Typical	Typical	Max	Max.
[V]	[V]	[V]	[mA]	[us]	[us]
15	6	0.5	10	50	100

Note: The voltage range between threshold for “High” and threshold for “Low” provides room for component tolerances, aging and temperature. This range includes but it is not circuit hysteresis.

This document is not to be reproduced, modified, adapted, published, neither translated in any material form in whole or in part nor disclosed to any third party without the prior written permission of Thales. © THALES 2021 – All rights reserved.

Category: Requirement
Allocation: HW
Priority: Mandatory
Safety: No
Verification: Test
[TOP:DJF:63]
No_Out-Links: Requirement based on common practices, experience or architectural decision

HW-IRS_DIM_VI_409

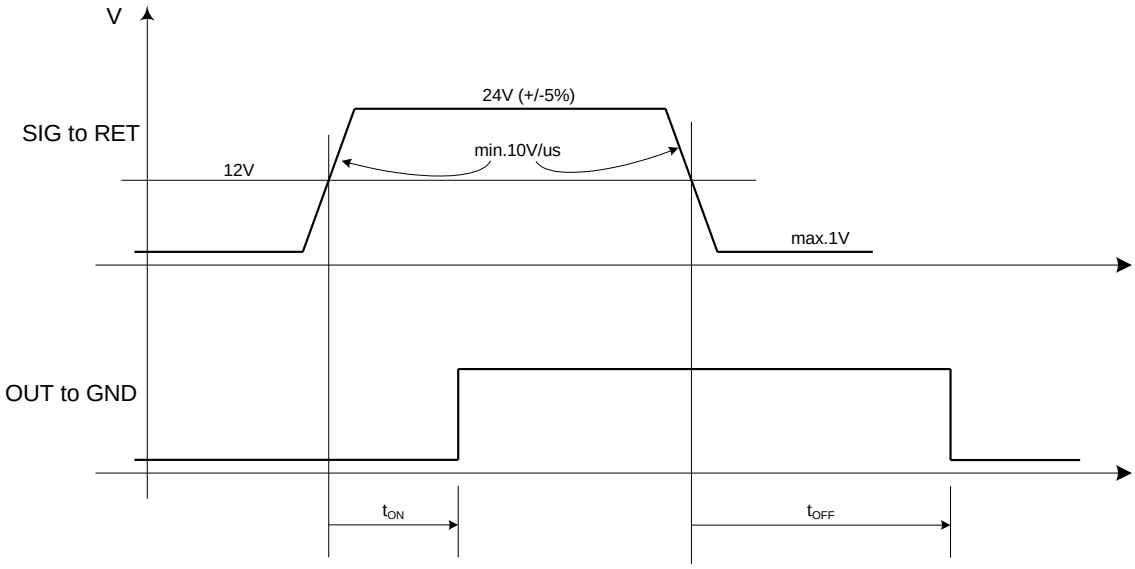

Note: To ensure the slew rates of the input signal (SIG to RET), a push-pull signal source (see 367) shall be used;

Category: Picture
Allocation: HW
Priority: NA
Safety: NA
Verification: NA
NA

HW-IRS_DIM_VI_410

The 24V fast semiconductor channels can be obtained from the structure in 387 (or 389):

a. remove U1A and U1B LFD switches

b. remove (or use a small value for) C1A and C1B capacitors.

This document is not to be reproduced, modified, adapted, published, neither translated in any material form in whole or in part nor disclosed to any third party without the prior written permission of Thales. © THALES 2021 – All rights reserved.

c. keep/adjust all other components used in 24V-36V metallic type inputs channels.

Category: Background
Allocation: NA
Priority: NA
Safety: NA
Verification: NA
NA

3.1.4 Other requirements

HW-IRS_DIM_VI_477

The DII Board shall provide two programmable serial storage devices (one for each replica) with I2C the interface and size of 1Mbit to I/O Processor daughterboard.

Category: Requirement
Allocation: HW
Priority: Mandatory
Safety: Yes
Verification: Analysis
[TOP:FMDD:221]

HW-IRS_DIM_VI_413

All components on DII board shall have their voltage, power or current stress derated as per Thales Component Derating Requirements [5].

Category: Requirement
Allocation: HW
Priority: Mandatory
Safety: No
Verification: Analysis
[HWADD:TOP:0007]

HW-IRS_DIM_VI_381

The module shall provide galvanic isolation between the Plant and the System as defined in TOP Isolation Coordination [3].

Category: Requirement
Allocation: HW
Priority: Mandatory
Safety: Yes
Verification:

This document is not to be reproduced, modified, adapted, published, neither translated in any material form in whole or in part nor disclosed to any third party without the prior written permission of Thales. © THALES 2021 – All rights reserved.

Analysis
Test
[TOP:FMDD:1520]

HW-IRS_DIM_VI_526

The DIM-V Module shall have Hot-Swap capability in compliance with the definition stated in [8], item TOP:FMDD:1467.

Note: 24V power rail will be served by the DOI-V board while the 5V power rail will be served by the I/O Processor board.

Category: Requirement
Allocation: HW
Priority: Mandatory
Safety: Yes
Verification: Demonstration
[HWADD:TOP:0074]

3.2 PHYSICAL REQUIREMENTS

3.2.1 Mechanical, Packaging, Finishes

HW-IRS_DIM_VI_415

The module shall be designed to conform to the ESD requirements for assembly, handling, shipping, storage and disposition of electronic assemblies in accordance to Thales practices.

Category: Background
Allocation: NA
Priority: NA
Safety: NA
Verification: NA
NA

HW-IRS_DIM_VI_416

The module shall be compatible with the TOP standardized I/O slot as defined in TOP HW-ADD [2].

Category: Requirement
Allocation: HW
Priority: Mandatory
Safety: No
Verification:
Analysis
Demonstration
[HWADD:TOP:0072]

This document is not to be reproduced, modified, adapted, published, neither translated in any material form in whole or in part nor disclosed to any third party without the prior written permission of Thales. © THALES 2021 – All rights reserved.

HW-IRS_DIM_VI_417

The width of the module shall be 6HP.

Category: Requirement
Allocation: HW
Priority: Mandatory
Safety: No
Verification: Analysis
[HWADD:TOP:0072]

HW-IRS_DIM_VI_418

The module shall fit in the mechanical envelope of a standard 3U European size 100 mm x 160 mm (height x depth).

Category: Requirement
Allocation: HW
Priority: Mandatory
Safety: No
Verification: Inspection
[HWADD:TOP:0012]

HW-IRS_DIM_VI_419

For the 7HA-02919-XXXX variants, all connections to the module shall be done through the rear edge connectors (except the faceplate diagnostics port, if needed).

Category: Requirement
Allocation: HW
Priority: Mandatory
Safety: No
Verification: Inspection
[HWADD:TOP:0072]

HW-IRS_DIM_VI_528

For the 7HA-04924-XXXX variants, all connections to the module shall be done through the front and rear edge connectors.

Category: Requirement
Allocation: HW
Priority: Mandatory
Safety: No
Verification: Inspection
[HWADD:TOP:0071]
[HWADD:TOP:0140]

This document is not to be reproduced, modified, adapted, published, neither translated in any material form in whole or in part nor disclosed to any third party without the prior written permission of Thales. © THALES 2021 – All rights reserved.

HW-IRS_DIM_VI_422

The I/O Processor board shall be mounted relative to the main DII board in such way that both connectors are fully inserted at the end of the insertion travel.

Note: since the two connectors are different it is conceivable that the initial engagement may not be simultaneous.

Category: Requirement
Allocation: HW
Priority: Mandatory
Safety: No
Verification:
Analysis
Demonstration
[HWADD:TOP:0072]

HW-IRS_DIM_VI_447

The DII Plant connector shall be DIN41612 Type-F48

Category: Requirement
Allocation: HW
Priority: Mandatory
Safety: No
Verification: Inspection
[HWADD:TOP:0013]

HW-IRS_DIM_VI_423

For the 7HA-02919-XXXX variants the mechanical arrangement of connectors and LEDs on the front plate shall comply with the I/O Module physical aspect requirements described in HW ADD [2].

Note: the picture in 424 shows a generic aspect of the module.

Category: Requirement
Allocation: HW
Priority: Mandatory
Safety: No
Verification:
Analysis
Inspection
[HWADD:TOP:0071]

This document is not to be reproduced, modified, adapted, published, neither translated in any material form in whole or in part nor disclosed to any third party without the prior written permission of Thales. © THALES 2021 – All rights reserved.

HW-IRS_DIM_VI_424

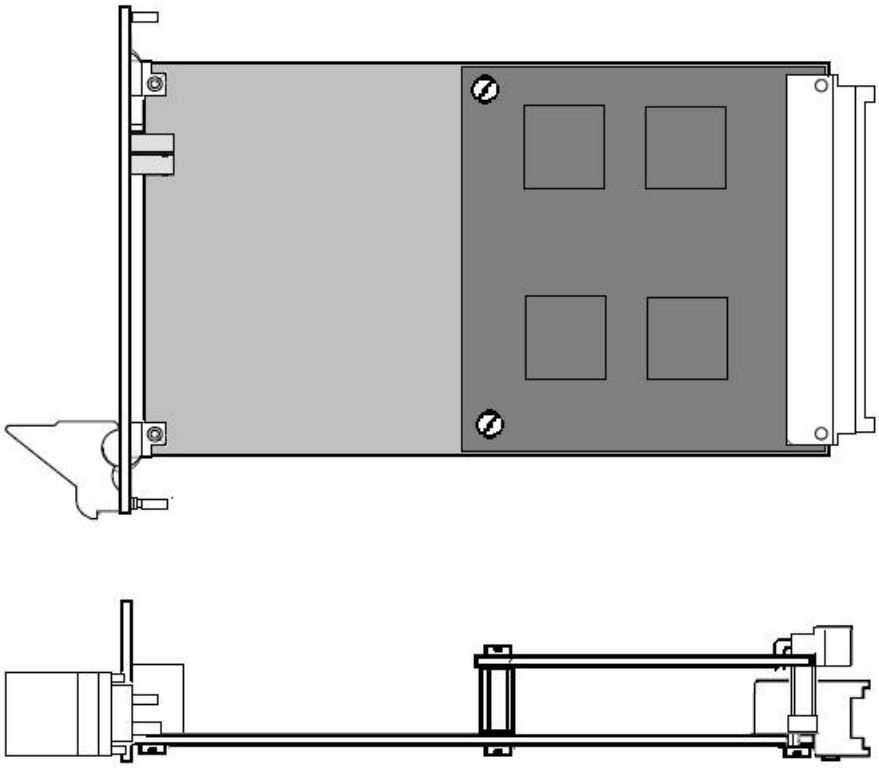

Category: Picture
Allocation: HW
Priority: NA
Safety: NA
Verification: NA
NA

HW-IRS_DIM_VI_425

The DII module shall be coded at the bottom coding block to prevent its insertion into a wrong slot in the subrack.

Category: Requirement
Allocation: HW
Priority: Mandatory
Safety: Yes
Verification: Inspection
[HWADD:TOP:0075]

This document is not to be reproduced, modified, adapted, published, neither translated in any material form in whole or in part nor disclosed to any third party without the prior written permission of Thales. © THALES 2021 – All rights reserved.

HW-IRS_DIM_VI_479

The key code shall be set according to specification provided in TOP HW-ADD [2].

Category: Requirement
Allocation: HW
Priority: Mandatory
Safety: No
Verification: Inspection
[HWADD:TOP:0075]

HW-IRS_DIM_VI_533

The 7HA-04924-XXXX variants shall accept a mating connector equipped with an Intermas 409.113 841 backshell

(Thales part number 99232605).

The recommended hardware is Intermas 409.113826 (Thales part number 99232607).

Category: Requirement
Allocation: HW
Priority: Mandatory
Safety: No
Verification: Inspection
[HWADD:TOP:0138]

HW-IRS_DIM_VI_534

The DII module shall have an ESD discharge strip along the lower portion of the PCB. The ESD strip shall consist of two segments. The rear segement shall connect to electronics ground through a resistor. The front portion shall connect directly to the faceplate. The sections shall be separated by at least 2 mm or the required electonics to ground insulation distance, whichever is larger.

Category: Requirement
Allocation: HW
Priority: Mandatory
Safety: No
Verification: Inspection
[HWADD:TOP:0004]

3.2.2 Thermal Management

HW-IRS_DIM_VI_525

The DIM module temperature measurement shall span over the range of -45C to +100C with an accuracy of 2% FSR or better.

This document is not to be reproduced, modified, adapted, published, neither translated in any material form in whole or in part nor disclosed to any third party without the prior written permission of Thales. © THALES 2021 – All rights reserved.

Category: Requirement
Allocation: HW
Priority: Mandatory
Safety: Yes
Verification: Analysis
[TOP:FMDD:801]
[TOP:FMDD:806]

HW-IRS_DIM_VI_427

The module shall contain no active devices for cooling (such fans, Peltier, etc.).

Category: Requirement
Allocation: HW
Priority: Mandatory
Safety: No
Verification: Analysis
[HWADD:TOP:0007]
No_Out-Links: Requirement based on common practices, experience or architectural decision

HW-IRS_DIM_VI_491

The total power dissipation at the module level shall be lower than 8 Watt.

Category: Requirement
Allocation: HW
Priority: Mandatory
Safety: No
[HWADD:TOP:0105]
No_Out-Links: Requirement based on common practices, experience or architectural decision

3.2.3 Environmental

3.2.3.1 Temperature

HW-IRS_DIM_VI_430

The module shall operate correctly when mounted in the equipment rack/subrack within the ambient temperature limits defined in TOP HW-ADD [2].

Category: Requirement
Allocation: HW
Priority: Mandatory
Safety: Yes
Verification:

This document is not to be reproduced, modified, adapted, published, neither translated in any material form in whole or in part nor disclosed to any third party without the prior written permission of Thales. © THALES 2021 – All rights reserved.

Test
Analysis
[HWADD:TOP:0086]

3.2.3.2 Humidity

HW-IRS_DIM_VI_433

The module shall continue to operate correctly when the equipment rack in which it is mounted is subjected to ambient non-condensing relative humidity between the values defined in TOP HW-ADD [2].

Category: Requirement
Allocation: HW
Priority: Mandatory
Safety: Yes
Verification:
Test
Analysis
[HWADD:TOP:0088]

3.2.3.3 Vibrations

HW-IRS_DIM_VI_435

The module shall continue to operate correctly when the equipment rack in which it is mounted is subjected to the vibration listed defined in TOP HW-ADD [2].

Category: Requirement
Allocation: HW
Priority: Mandatory
Safety: Yes
Verification:
Test
Analysis
[HWADD:TOP:0089]

3.2.3.4 Mechanical Shock

HW-IRS_DIM_VI_437

The module shall continue to operate correctly when the equipment rack in which it is mounted is subjected to mechanical shock up to the values defined in TOP HW-ADD [2].

Category: Requirement
Allocation: HW
Priority: Mandatory
Safety: Yes
Verification:

This document is not to be reproduced, modified, adapted, published, neither translated in any material form in whole or in part nor disclosed to any third party without the prior written permission of Thales. © THALES 2021 – All rights reserved.

Test
Analysis
[HWADD:TOP:0089]

3.2.3.5 ESD

HW-IRS_DIM_VI_439

The module shall be designed and manufactured to meet ESD requirements defined in TOP HW-ADD [2].

Category: Requirement
Allocation: HW
Priority: Mandatory
Safety: No
Verification:
Test
Analysis
[TOP:FMDD:1522]
[HWADD:TOP:0091]

3.2.3.6 Surges

HW-IRS_DIM_VI_441

The module shall be designed and manufactured to meet Surges requirements defined in TOP HW-ADD [2].

Category: Requirement
Allocation: HW
Priority: Mandatory
Safety: No
Verification:
Test
Analysis
[TOP:FMDD:1522]
[HWADD:TOP:0091]

3.2.3.7 Transient Burst

HW-IRS_DIM_VI_443

The module shall be designed and manufactured to meet Transient Burst requirements defined in TOP HW-ADD [2].

Category: Requirement
Allocation: HW
Priority: Mandatory
Safety: No
Verification:

This document is not to be reproduced, modified, adapted, published, neither translated in any material form in whole or in part nor disclosed to any third party without the prior written permission of Thales. © THALES 2021 – All rights reserved.

Test
Analysis
[TOP:FMDD:1522]
[HWADD:TOP:0091]

3.2.3.8 EMI/EMC

HW-IRS_DIM_VI_445

The module will be designed and manufactured to meet EMI/EMC requirements defined in TOP HW-ADD [2].

Category: Background
Allocation: NA
Priority: NA
Safety: NA

This document is not to be reproduced, modified, adapted, published, neither translated in any material form in whole or in part nor disclosed to any third party without the prior written permission of Thales. © THALES 2021 – All rights reserved.

4. INTERFACES

4.1 SIGNAL INTERFACES

HW-IRS_DIM_VI_446

For the 7HA-02919-XXXX variants the Plant connector of the DII (DIN41612 Type-F48) shall have the signal assignments for interfacing the external digital inputs as shown in 448:

Category: Requirement
Allocation: HW
Priority: Mandatory
Safety: No
Verification: Analysis
[HWADD:TOP:0015]

HW-IRS_DIM_VI_448

Row	D	B	Z
Pin			
2	SIG1-A		RET1-A
4	RET1-B		SIG1-B
6	SIG2-A		RET2-A
8	RET2-B		SIG2-B
10	SIG3-A		RET3-A
12	RET3-B		SIG3-B
14	SIG4-A		RET4-A
16	RET4-B		SIG4-B
18	SIG5-A		RET5-A
20	RET5-B		SIG5-B
22	SIG6-A		RET6-A
24	RET6-B		SIG6-B

This document is not to be reproduced, modified, adapted, published, neither translated in any material form in whole or in part nor disclosed to any third party without the prior written permission of Thales. © THALES 2021 – All rights reserved.

26	SIG7-A		RET7-A
28	RET7-B		SIG7-B
30	SIG8-A		RET8-A
32	RET8-B		SIG8-B

Category: Requirement
Allocation: HW
Priority: Mandatory
Safety: No
Verification: Analysis
[HWADD:TOP:0015]

HW-IRS_DIM_VI_529

For the 7HA-04924-XXXX variants the front Plant connector of the DII (DIN41612 Type-F48) shall have the signal assignments for interfacing the external digital inputs as shown in 530:

Category: Requirement
Allocation: HW
Priority: Mandatory
Safety: No
Verification: Analysis
[HWADD:TOP:0140]

HW-IRS_DIM_VI_530

Row	D	B	Z
Pin			
2	IN-8B-RTN	IN-8B-RTN	IN-8B
4	IN-8A	IN-8A-RTN	IN-8A-RTN
6	IN-7B-RTN	IN-7B-RTN	IN-7B
8	IN-7A	IN-7A-RTN	IN-7A-RTN
10	IN-6B-RTN	IN-6B-RTN	IN-6B
12	IN-6A	IN-6A-RTN	IN-6A-RTN
14	IN-5B-RTN	IN-5B-RTN	IN-5B

This document is not to be reproduced, modified, adapted, published, neither translated in any material form in whole or in part nor disclosed to any third party without the prior written permission of Thales. © THALES 2021 – All rights reserved.

16	IN-5A	IN-5A-RTN	IN-5A-RTN
18	IN-4B-RTN	IN-4B-RTN	IN-4B
20	IN-4A	IN-4A-RTN	IN-4A-RTN
22	IN-3B-RTN	IN-3B-RTN	IN-3B
24	IN-3A	IN-3A-RTN	IN-3A-RTN
26	IN-2B-RTN	IN-2B-RTN	IN-2B
28	IN-2A	IN-2A-RTN	IN-2A-RTN
30	IN-1B-RTN	IN-1B-RTN	IN-1B
32	IN-1A	IN-1A-RTN	IN-1A-RTN

Category: Requirement
Allocation: HW
Priority: Mandatory
Safety: No
Verification: Analysis
[HWADD:TOP:0140]

HW-IRS_DIM_VI_531

For the 7HA-04924-XXXX variants the rear Plant connector of the DII (DIN41612 Type-F48) shall have the signal assignments for interfacing the external digital inputs as shown in 532:

Category: Requirement
Allocation: HW
Priority: Mandatory
Safety: No
Verification: Analysis
[HWADD:TOP:0140]

HW-IRS_DIM_VI_532

Row	D	B	Z
Pin			
2			

This document is not to be reproduced, modified, adapted, published, neither translated in any material form in whole or in part nor disclosed to any third party without the prior written permission of Thales. © THALES 2021 – All rights reserved.

4			
6	IN-2A	IN-2A-RTN	IN-2A-RTN
8	IN-2B-RTN	IN-2B-RTN	IN-2B
10			
12			
14	IN-4A	IN-4A-RTN	IN-4A-RTN
16	IN-4B-RTN	IN-4B-RTN	IN-4B
18			
20			
22	IN-6A	IN-6A-RTN	IN-6A-RTN
24	IN-6B-RTN	IN-6B-RTN	IN-6B
26			
28			
30	IN-8A	IN-8A-RTN	IN-8A-RTN
32	IN-8B-RTN	IN-8B-RTN	IN-8B

Category: Requirement
Allocation: HW
Priority: Mandatory
Safety: No
Verification: Analysis
[HWADD:TOP:0140]

HW-IRS_DIM_VI_449

The DII connector with the I/O processor board shall be of the type specified in TOP HW-ADD [2].

Category: Requirement
Allocation: HW
Priority: Mandatory

This document is not to be reproduced, modified, adapted, published, neither translated in any material form in whole or in part nor disclosed to any third party without the prior written permission of Thales. © THALES 2021 – All rights reserved.

Safety: No
Verification: Analysis
[HWADD:TOP:0010]

HW-IRS_DIM_VI_450

The signals in the DII connector with the I/O processor board shall be assigned as per specification given in TOP HW-ADD [2].

Category: Requirement
Allocation: HW
Priority: Mandatory
Safety: No
Verification: Analysis
[HWADD:TOP:0010]
[HWADD:TOP:0016]

HW-IRS_DIM_VI_451

The signal definition between DII and the I/O Processor board shall be compliant with the specification provided in the TOP HW-ADD [2].

Category: Requirement
Allocation: HW
Priority: Mandatory
Safety: No
Verification: Analysis
[HWADD:TOP:0010]
[HWADD:TOP:0016]

4.2 MAN-MACHINE INTERFACES

HW-IRS_DIM_VI_453

The DII shall provide on the faceplate one dual bicolor LED for each I/O Processor Replica.

Category: Requirement
Allocation: HW
Priority: Mandatory
Safety: No
Verification:
Analysis
Inspection
[TOP:FMDD:945]
[TOP:FMDD:946]

This document is not to be reproduced, modified, adapted, published, neither translated in any material form in whole or in part nor disclosed to any third party without the prior written permission of Thales. © THALES 2021 – All rights reserved.

HW-IRS_DIM_VI_454

The dual LED colors shall be Green and Red.

Category: Requirement
Allocation: HW
Priority: Mandatory
Safety: No
Verification: Analysis
[TOP:FMDD:945]
[TOP:FMDD:946]

HW-IRS_DIM_VI_455

Each dual LED shall be controllable by the corresponding I/O Processor.

Category: Requirement
Allocation: HW
Priority: Mandatory
Safety: No
Verification: Analysis
[TOP:FMDD:945]
[TOP:FMDD:946]

HW-IRS_DIM_VI_482

Each dual LED shall be powered by the corresponding I/O Processor replica power circuits.

Category: Requirement
Allocation: HW
Priority: Mandatory
Safety: No
Verification: Analysis
[TOP:FMDD:947]

This document is not to be reproduced, modified, adapted, published, neither translated in any material form in whole or in part nor disclosed to any third party without the prior written permission of Thales. © THALES 2021 – All rights reserved.

5. PERSONNEL SAFETY

HW-IRS_DIM_VI_285

Surge protection devices shall not ignite or melt, nor cause ignition of adjacent surfaces, when used within rated operating or surge conditions.

Category: Requirement
Allocation: HW
Priority: Mandatory
Safety: Yes
Verification: Analysis
[HWADD:TOP:0092]

HW-IRS_DIM_VI_485

Exposed metal surfaces shall be smoothed or de-burred to prevent injury to personnel due to contact.

Category: Requirement
Allocation: HW
Priority: Mandatory
Safety: Yes
Verification: Inspection
[HWADD:TOP:0106]

HW-IRS_DIM_VI_492

All metal surfaces shall be grounded to chassis.

Category: Requirement
Allocation: HW
Priority: Mandatory
Safety: Yes
Verification:
Inspection
Test
[HWADD:TOP:0106]

This document is not to be reproduced, modified, adapted, published, neither translated in any material form in whole or in part nor disclosed to any third party without the prior written permission of Thales. © THALES 2021 – All rights reserved.

6. FUNCTIONAL SAFETY

HW-IRS_DIM_VI_286

The design shall conform to the applicable safety standards defined in TOP HW-ADD [2].

Category: Requirement
Allocation: HW
Priority: Mandatory
Safety: Yes
Verification: Analysis
[HWADD:TOP:0099]

HW-IRS_DIM_VI_456

Development process shall comply with Safety Integrity Level 4 as defined in TOP HW-ADD [2].

Category: Requirement
Allocation: HW
Priority: Mandatory
Safety: Yes
Verification: Analysis
[HWADD:TOP:0094]
No_Out-Links:
Requirement based on common practices, experience or architectural decision

HW-IRS_DIM_VI_458

All safety components shall be verified for their correct usage according to the safety application conditions

Category: Requirement
Allocation: HW
Priority: Mandatory
Safety: Yes
Verification: Analysis
[HWADD:TOP:0100]

HW-IRS_DIM_VI_459

The design shall conform to the isolation rules specified in the Isolation Coordination document [3]

Category: Requirement
Allocation: HW
Priority: Mandatory
Safety: Yes
Verification:

This document is not to be reproduced, modified, adapted, published, neither translated in any material form in whole or in part nor disclosed to any third party without the prior written permission of Thales. © THALES 2021 – All rights reserved.

Analysis
Test
[HWADD:TOP:0005]

This document is not to be reproduced, modified, adapted, published, neither translated in any material form in whole or in part nor disclosed to any third party without the prior written permission of Thales. © THALES 2021 – All rights reserved.

7. SECURITY

This document is not to be reproduced, modified, adapted, published, neither translated in any material form in whole or in part nor disclosed to any third party without the prior written permission of Thales. © THALES 2021 – All rights reserved.

8. SOFTWARE REQUIREMENTS

This document is not to be reproduced, modified, adapted, published, neither translated in any material form in whole or in part nor disclosed to any third party without the prior written permission of Thales. © THALES 2021 – All rights reserved.

9. RELIABILITY (MTBF)

HW-IRS_DIM_VI_291

The module shall be designed for a design life of at least 20 years.

Category: Requirement
Allocation: HW
Priority: Mandatory
Safety: No
Verification: Analysis
[HWADD:TOP:0095]

HW-IRS_DIM_VI_466

The TOP subsystem MTTR shall be less than 30 minutes.

Category: Requirement
Allocation: HW
Priority: Mandatory
Safety: No
Verification: Analysis
[HWADD:TOP:0098]

HW-IRS_DIM_VI_467

Mean Time Between Failure (MTBF) of a unit shall be calculated in conformance with applicable sections of ALCAREL reference failure rates or MIL-HDBK-217 or based on established field data. The calculation shall be done for environment Ground Fixed 45^0 C.

Category: Requirement
Allocation: HW
Priority: Mandatory
Safety: No
Verification: Analysis
[HWADD:TOP:0097]

HW-IRS_DIM_VI_468

The module shall have MTBF of greater than 100,000 hours.

Category: Requirement
Allocation: HW
Priority: Mandatory
Safety: No
Verification: Analysis

This document is not to be reproduced, modified, adapted, published, neither translated in any material form in whole or in part nor disclosed to any third party without the prior written permission of Thales. © THALES 2021 – All rights reserved.

[HWADD:TOP:0095]

This document is not to be reproduced, modified, adapted, published, neither translated in any material form in whole or in part nor disclosed to any third party without the prior written permission of Thales. © THALES 2021 – All rights reserved.

10. POWER SUPPLY

HW-IRS_DIM_VI_469

The DIM Module shall be powered from two separate sets of power rails (one set per replica) supplied via the System backplane: 5VDC and 24VDC.

Category: Requirement
Allocation: HW
Priority: Mandatory
Safety: No
Verification: Analysis
[HWADD:TOP:0105]
[HWADD:TOP:0027]

HW-IRS_DIM_VI_470

The DII design shall target to draw less current than indicated in the table in 486.

Notes:

1. The 5.0V and the 24.0V rails are "pass through" from the system backplane via I/O Processor board.

2. The 3.3V power rail is produced on board of the I/O Processor daughterboard.

Category: Requirement
Allocation: HW
Priority: Mandatory
Safety: No
Verification: Test
[HWADD:TOP:0105]

HW-IRS_DIM_VI_486

Power Rail	Max. Current
[V]	[mA]
3.3	**25.0**
5.0	**0.0**

This document is not to be reproduced, modified, adapted, published, neither translated in any material form in whole or in part nor disclosed to any third party without the prior written permission of Thales. © THALES 2021 – All rights reserved.

24.0	**0.0**

Category: Requirement
Allocation: HW
Priority: Mandatory
Safety: No
Verification: Test
Comment: Limit on 5V rail changed to 0mA (from 80mA) based on feedback from the Designer. *[HWADD:TOP:0105]*

This document is not to be reproduced, modified, adapted, published, neither translated in any material form in whole or in part nor disclosed to any third party without the prior written permission of Thales. © THALES 2021 – All rights reserved.

11. ECOLOGICAL

HW-IRS_DIM_VI_472

Selection of components and materials shall follow fire protection guidelines (Zero halogen, Non-PVC materials).

Category: Requirement
Allocation: HW
Priority: Mandatory
Safety: Yes
Verification: Analysis
[HWADD:TOP:0093]

HW-IRS_DIM_VI_489

All components used in DIM design shall be RoHS, WEEE compatible.

Category: Requirement
Allocation: HW
Priority: Mandatory
Safety: Yes
Verification: Analysis
[HWADD:TOP:0007]

HW-IRS_DIM_VI_490

The DIM design shall restrict or justify the use of materials listed in TOP HW ADD [2] under "Hazardous Materials" Chapter.

Category: Requirement
Allocation: HW
Priority: Mandatory
Safety: Yes
Verification: Analysis
[HWADD:TOP:0093]

This document is not to be reproduced, modified, adapted, published, neither translated in any material form in whole or in part nor disclosed to any third party without the prior written permission of Thales. © THALES 2021 – All rights reserved.

12. INDUSTRIALIZATION

HW-IRS_DIM_VI_292

All printed circuit boards and components mounted on the printed circuit boards shall be conformally coated.

Note: All TOP boards will be qualified with conformal coating, therefore boards must be designed to support coating. It should be possible to order boards without coating, if needed by a project application or other purposes.

Category: Requirement
Allocation: HW
Priority: Mandatory
Safety: No
Verification:
Analysis
Inspection
[HWADD:TOP:0007]

This document is not to be reproduced, modified, adapted, published, neither translated in any material form in whole or in part nor disclosed to any third party without the prior written permission of Thales. © THALES 2021 – All rights reserved.

13. QUALIFICATION AND TESTING

HW-IRS_DIM_VI_473

The environmental qualification of the DIM module shall be performed in accordance with Qualification Test Specification document.

Category: Background
Allocation: NA
Priority: NA
Safety: NA
Verification: NA
NA

HW-IRS_DIM_VI_307

Functional qualification of the DIM module shall be performed in accordance with Functional Test Specification document.

Category: Background
Allocation: NA
Priority: NA
Safety: NA
Verification: NA
NA

This document is not to be reproduced, modified, adapted, published, neither translated in any material form in whole or in part nor disclosed to any third party without the prior written permission of Thales. © THALES 2021 – All rights reserved.

14. DIAGNOSIS & MAINTENANCE

This document is not to be reproduced, modified, adapted, published, neither translated in any material form in whole or in part nor disclosed to any third party without the prior written permission of Thales. © THALES 2021 – All rights reserved.

15. DOCUMENTATION

HW-IRS_DIM_VI_475

Module documentation shall be prepared according with the TOP Documentation- Plan [6]

Category: Requirement
Allocation: HW
Priority: NA
Safety: No
Verification: Analysis
[TOP:DJF:63]
No_Out-Links: Requirement based on common practices, experience or architectural decision

This document is not to be reproduced, modified, adapted, published, neither translated in any material form in whole or in part nor disclosed to any third party without the prior written permission of Thales. © THALES 2021 – All rights reserved.

16. OPEN ISSUES

HW-IRS_DIM_VI_476

N/A

Category: Background
Allocation: NA
Priority: NA
Safety: NA
Verification: NA
NA

(End Of Doors Export)

END OF DOCUMENT

This document is not to be reproduced, modified, adapted, published, neither translated in any material form in whole or in part nor disclosed to any third party without the prior written permission of Thales. © THALES 2021 – All rights reserved.