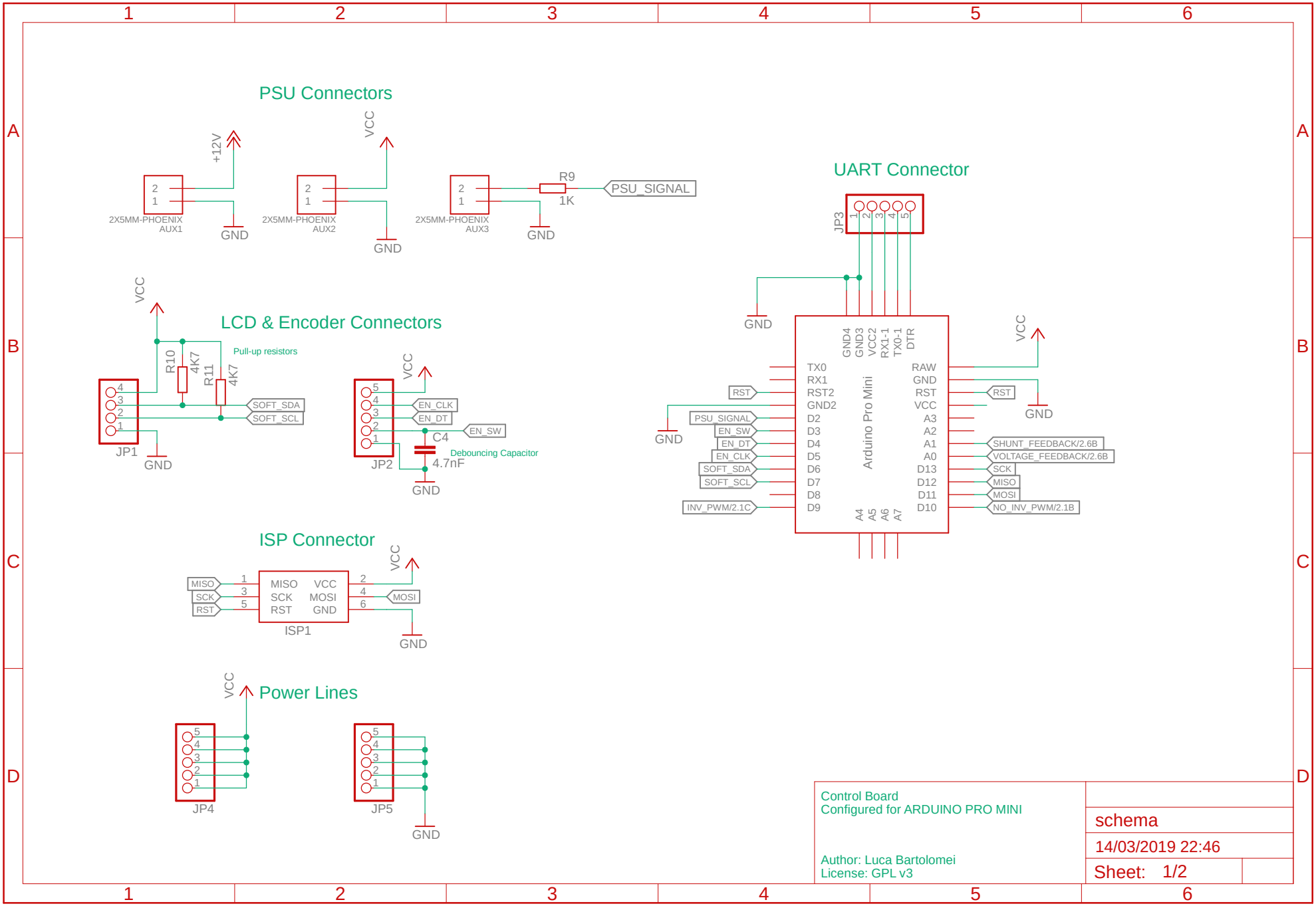
PSU Connectors
+12V
VCC
2X5MM-PHOENIX
AUX1
2X5MM-PHOENIX
AUX2
2X5MM-PHOENIX
AUX3
GND
R9
1K
PSU_SIGNAL
LCD & Encoder Connectors
Pull-up resistors
R10
4K7
R11
4K7
SOFT_SDA
SOFT_SCL
JP1
EN_CLK
EN_DT
EN_SW
C4
4.7nF
Debouncing Capacitor
JP2
UART Connector
JP3
GND4
GND3
VCC2
RX1-1
TX0-1
DTR
Arduino Pro Mini
TX0
RX1
RST2
GND2
D2
D3
D4
D5
D6
D7
D8
D9
RAW
GND
RST
VCC
A3
A2
A1
A0
D13
D12
D11
D10
A4
A5
A6
A7
SHUNT_FEEDBACK/2.6B
VOLTAGE_FEEDBACK/2.6B
SCK
MISO
MOSI
NO_INV_PWM/2.1B
INV_PWM/2.1C
ISP Connector
MISO
SCK
RST
VCC
MOSI
GND
ISP1
Power Lines
JP4
JP5
Control Board
Configured for ARDUINO PRO MINI
Author: Luca Bartolomei
License: GPL v3
schema
14/03/2019 22:46
Sheet: 1/2

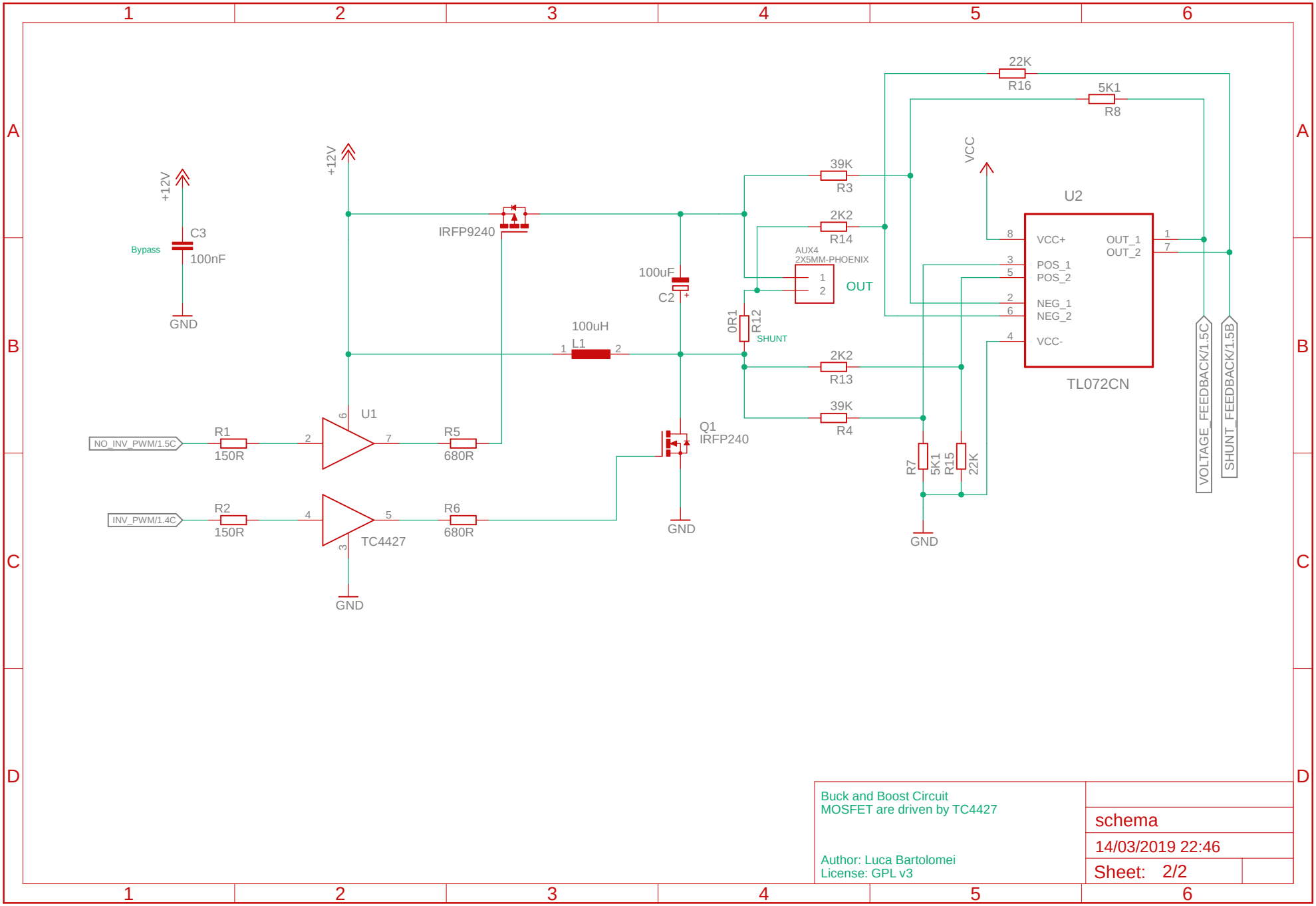
+12V
C3
Bypass
100nF
GND
+12V
IRFP9240
100uF
C2
100uH
L1
0R1
R12
SHUNT
39K
R3
2K2
R14
AUX4
2X5MM-PHOENIX
OUT
2K2
R13
39K
R4
22K
R16
5K1
R8
VCC
U2
VCC+
POS_1
POS_2
NEG_1
NEG_2
VCC-
OUT_1
OUT_2
TL072CN
VOLTAGE_FEEDBACK/1.5C
SHUNT_FEEDBACK/1.5B
NO_INV_PWM/1.5C
R1
150R
U1
R5
680R
Q1
IRFP240
INV_PWM/1.4C
R2
150R
TC4427
R6
680R
GND
R7
5K1
R15
22K
GND
GND
Buck and Boost Circuit
MOSFET are driven by TC4427
Author: Luca Bartolomei
License: GPL v3
schema
14/03/2019 22:46
Sheet: 2/2