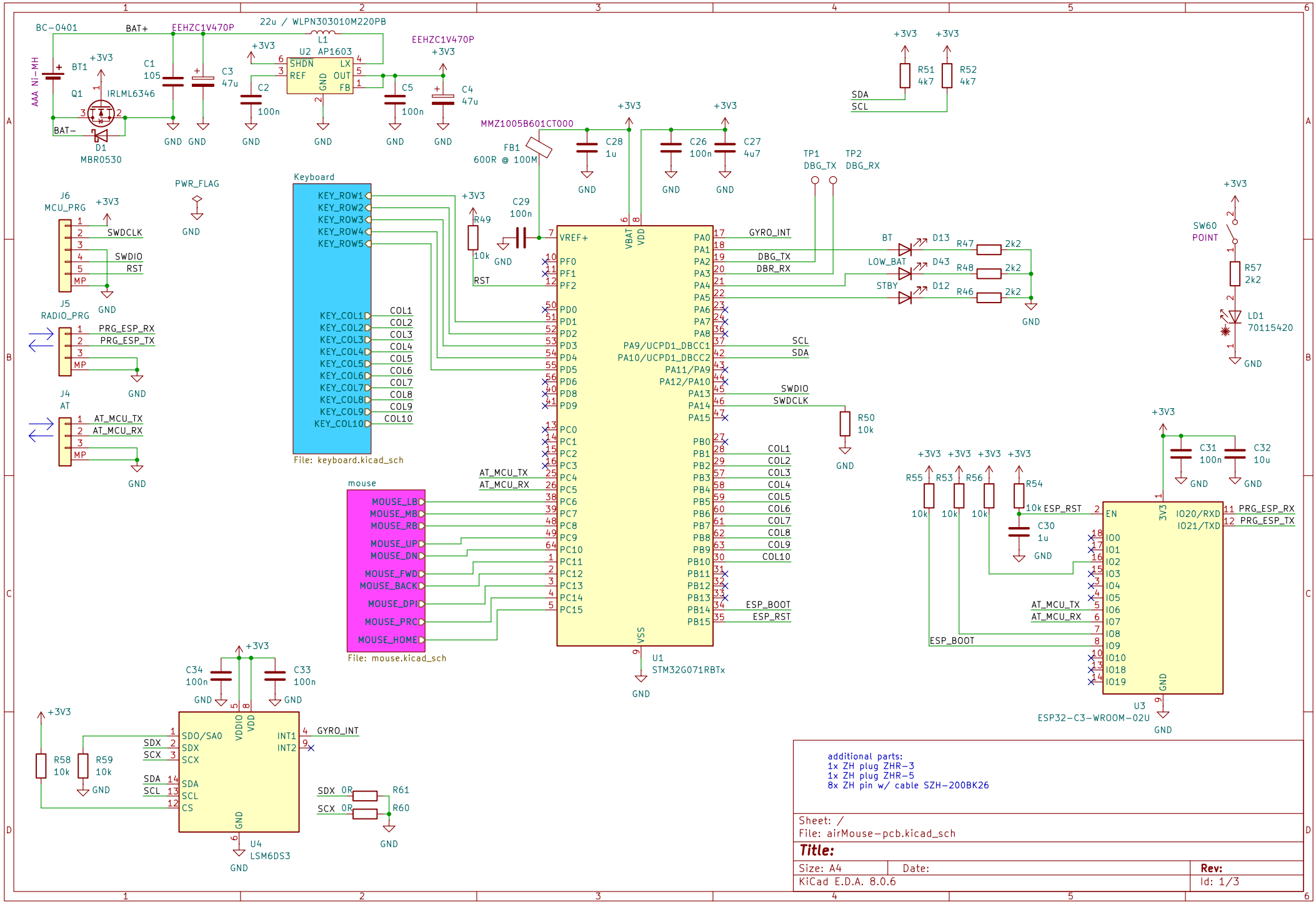

additional parts:
1x ZH plug ZHR-3
1x ZH plug ZHR-5
8x ZH pin w/ cable SZH-200BK26

Sheet: /
File: airMouse-pcb.kicad_sch

Title:

Size: A4	Date:	Rev:
KiCad E.D.A. 8.0.6		Id: 1/3

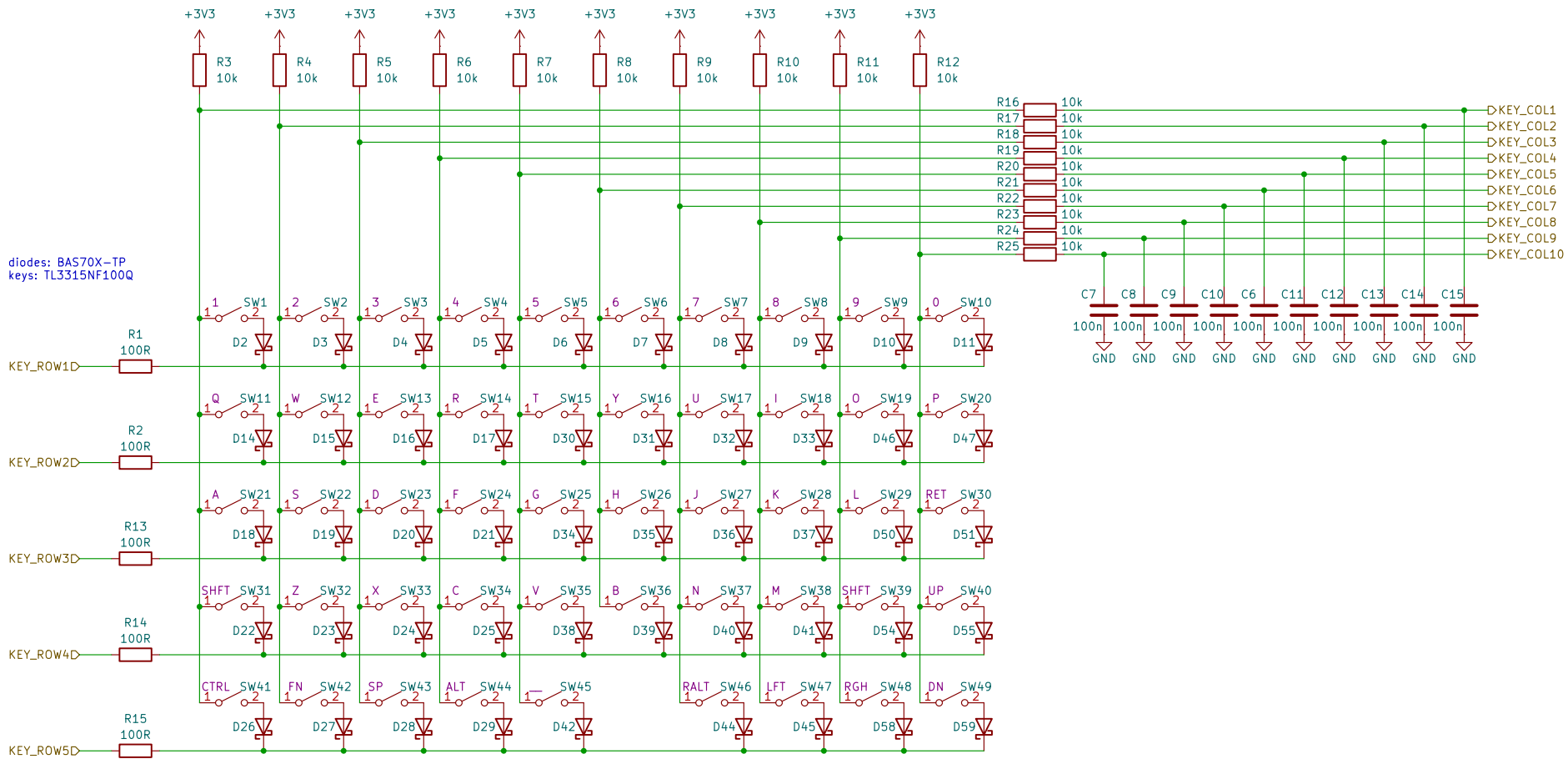

Sheet: /Keyboard/
File: keyboard.kicad_sch

Title:

Size: A4	Date:	Rev:
KiCad E.D.A. 8.0.6		Id: 2/3

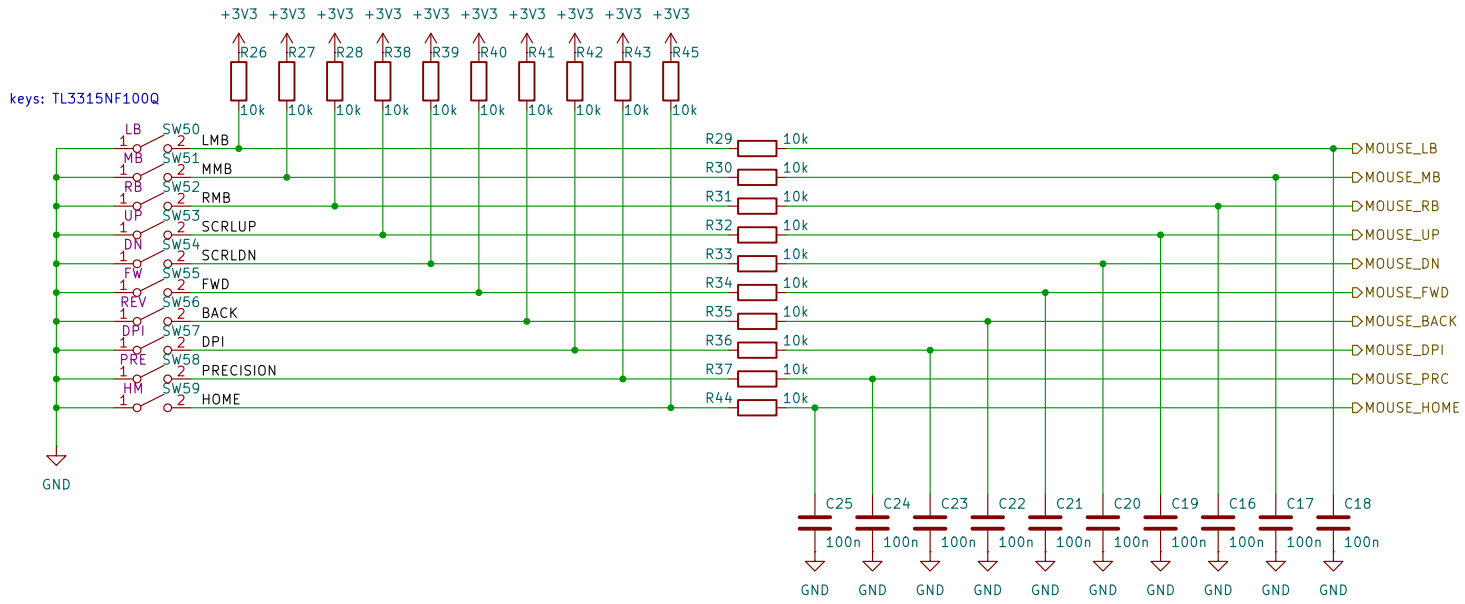

Sheet: /mouse/
File: mouse.kicad_sch

Title:

Size: A4	Date:	Rev:
KiCad E.D.A. 8.0.6		Id: 3/3