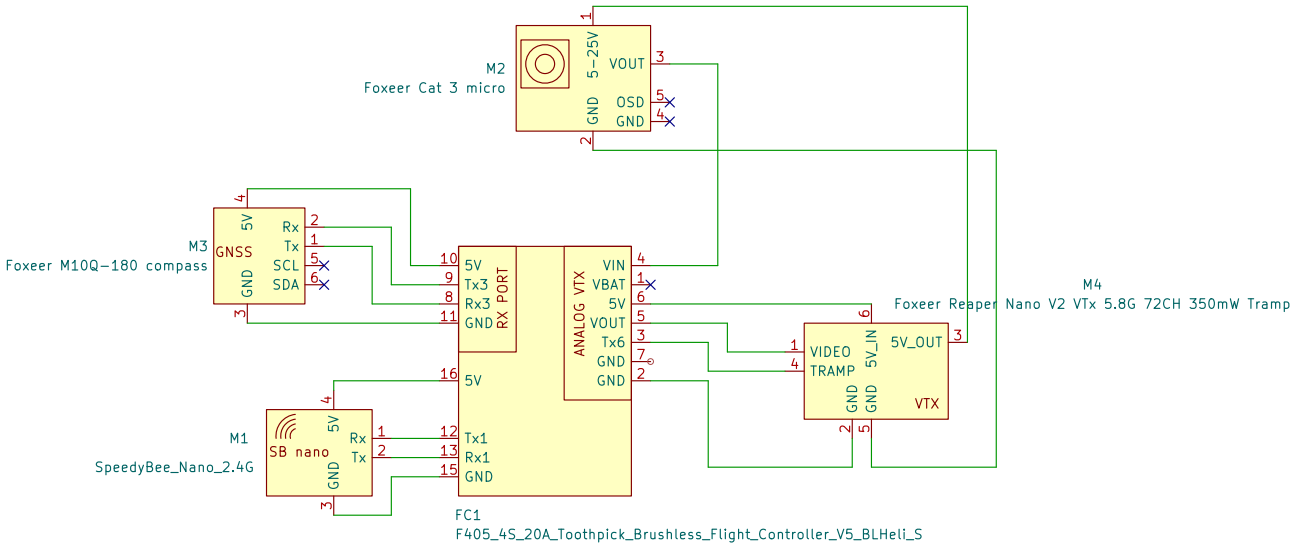

BOTTOM FRONT

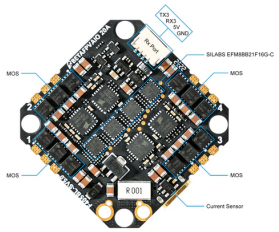

TOP FRONT

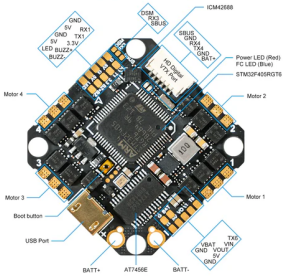

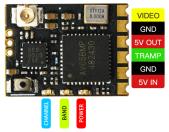

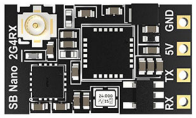

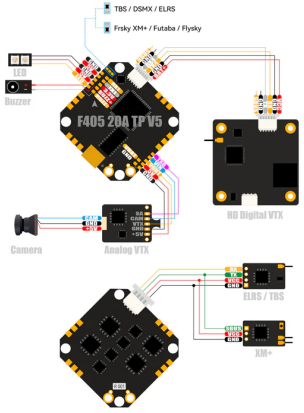

Bart's Design

Sheet: /
File: chimeraConn.kicad_sch

Title: BD1 "Chimera" connections

Size: A4	Date: 2025-06-18	Rev: MkII
KiCad E.D.A. 9.0.2		Id: 1/1