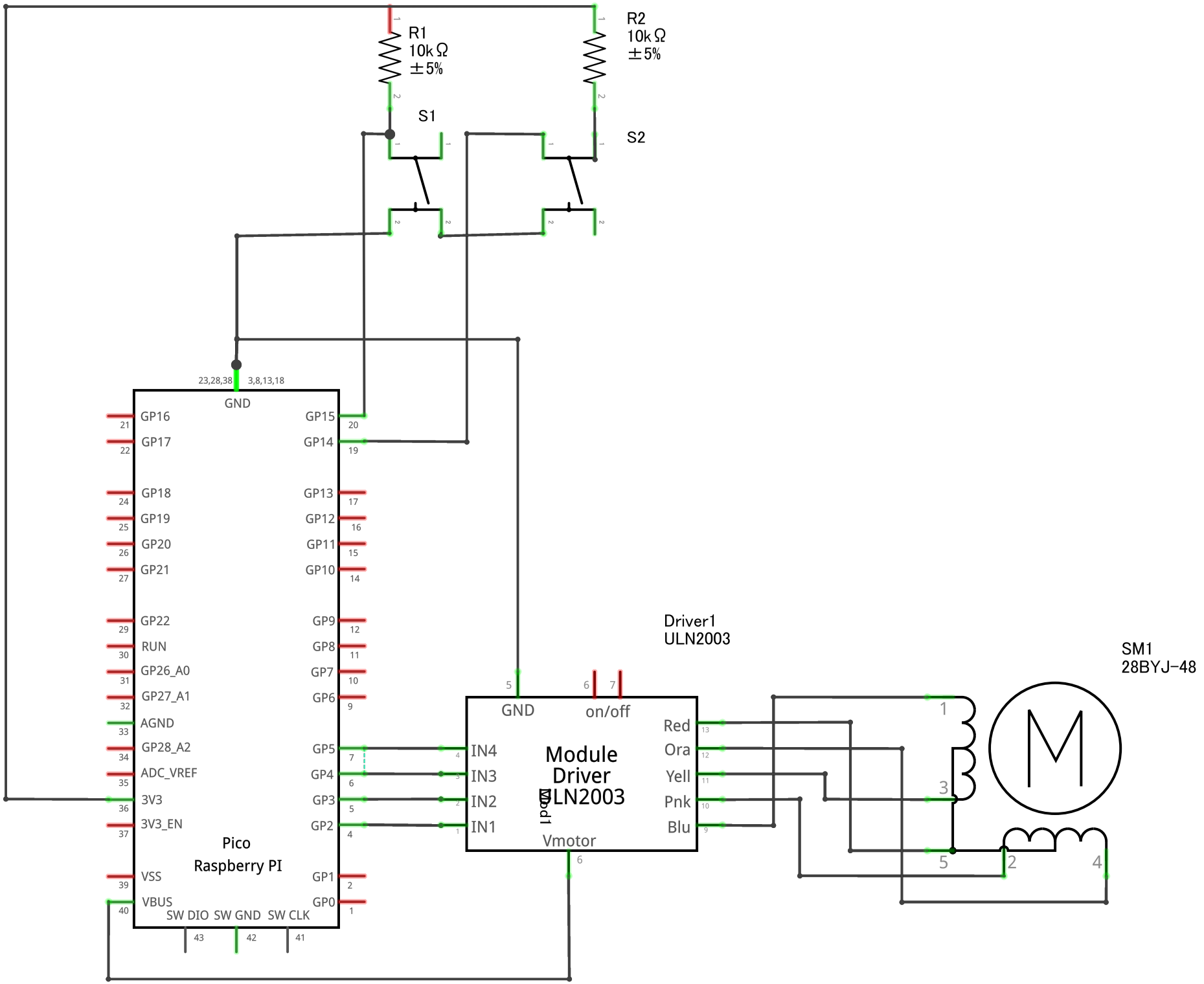
R1
10kΩ
±5%
R2
10kΩ
±5%
S1
S2
23,28,38
3,8,13,18
GND
GP16
GP17
GP18
GP19
GP20
GP21
GP22
RUN
GP26_A0
GP27_A1
AGND
GP28_A2
ADC_VREF
3V3
3V3_EN
VSS
VBUS
GP15
GP14
GP13
GP12
GP11
GP10
GP9
GP8
GP7
GP6
GP5
GP4
GP3
GP2
GP1
GP0
SW DIO
SW GND
SW CLK
Pico
Raspberry PI
Driver1
ULN2003
GND
on/off
IN4
IN3
IN2
IN1
Module
Driver
ULN2003
Vmotor
Red
Ora
Yell
Pnk
Blu
SM1
28BYJ-48
M

fritzing