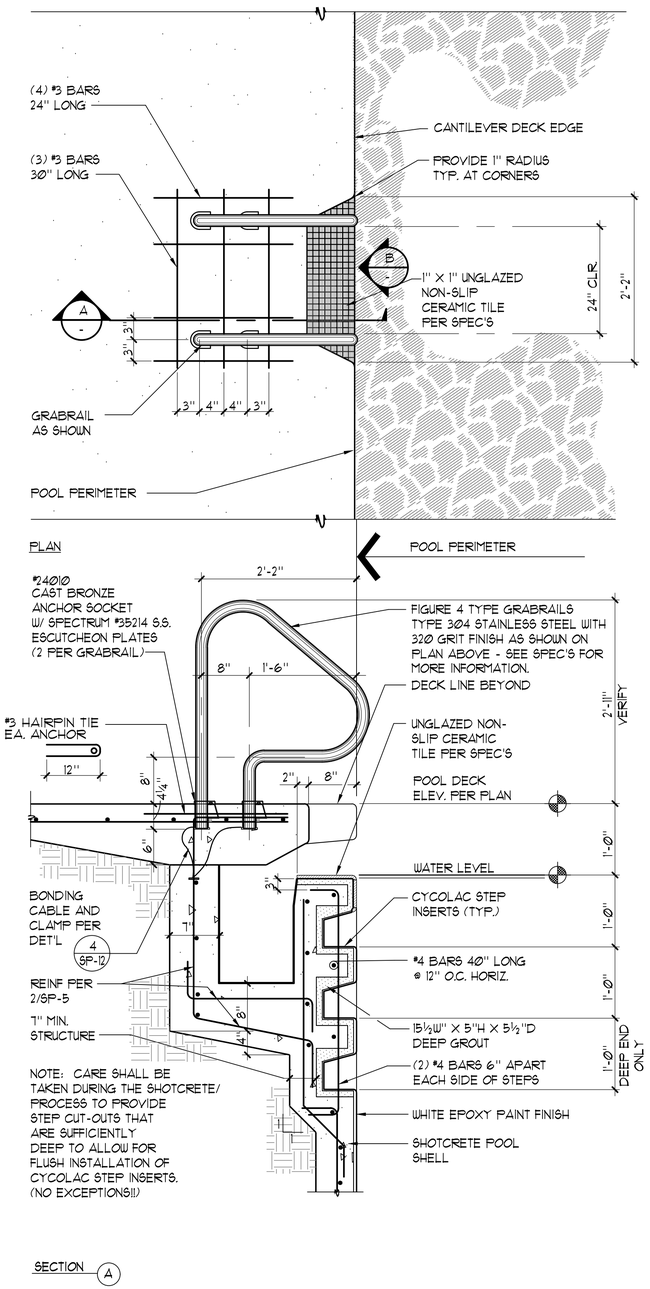

1 GRABRAIL WITH STEPS

1"=1'-0"

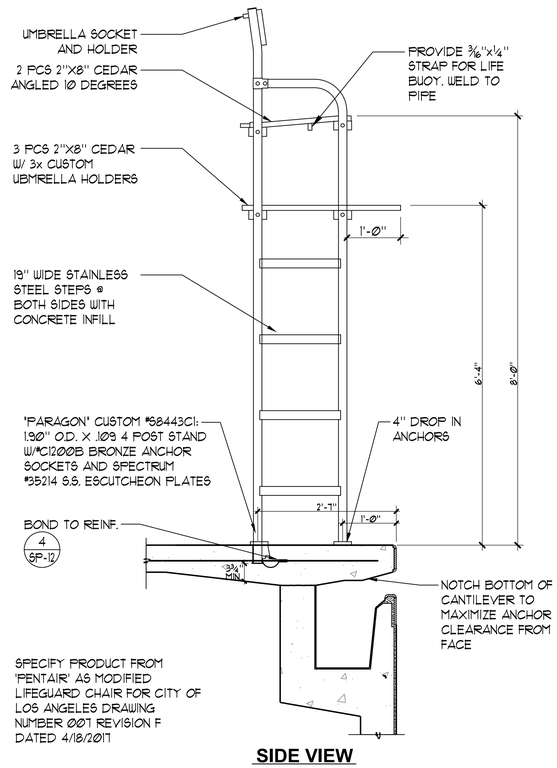

2 LIFEGUARD CHAIR

3/4"=1'-0"

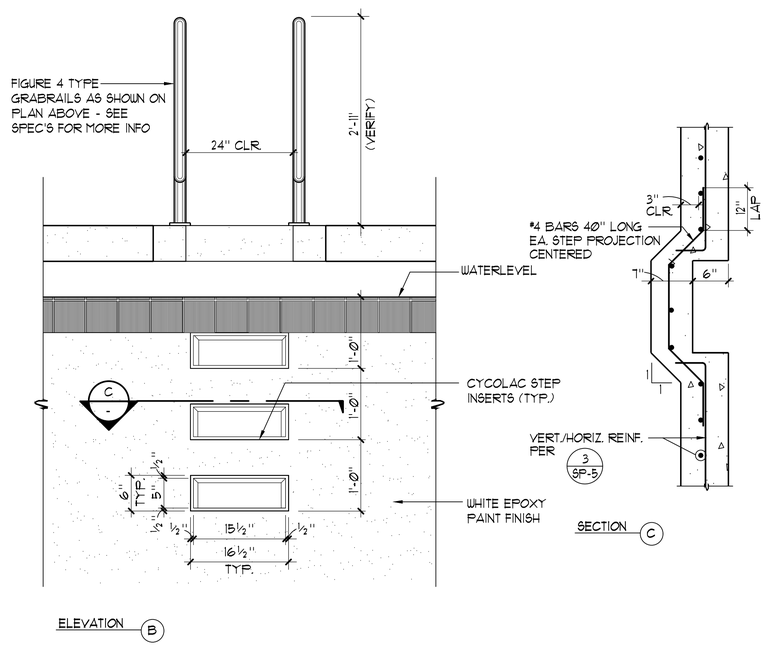

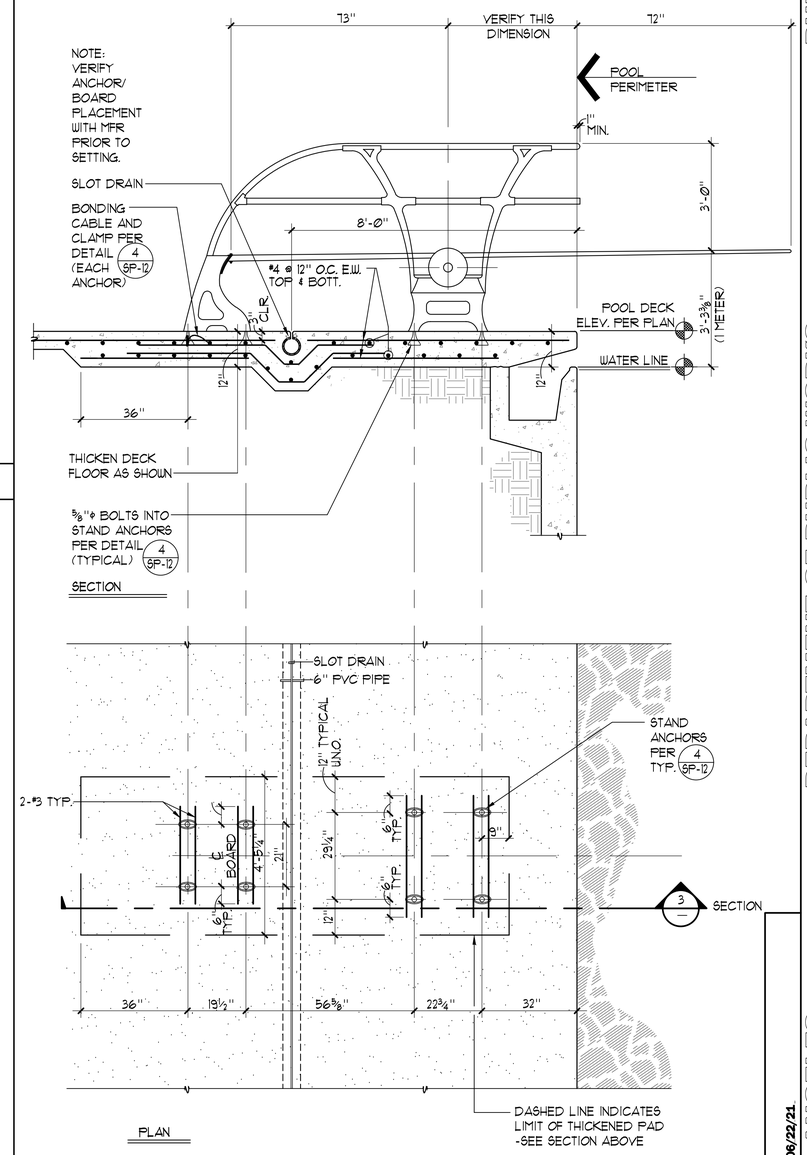

3 1 METER DIVE STAND

½"=1'-0"

AQUATIC DESIGN GROUP
2228 Faraday Ave. Carlsbad, CA 92008
AquaticDesignGroup@aol.com
760-438-2400

BUREAU OF ENGINEERING
OFFICIAL RECORD

BUREAU OF ENGINEERING

NO.	REVISION DESCRIPTION	DATE	BY

BUILDING NO. -

INDEX NO. RP-300118

ENGINEERING
CITY OF LOS ANGELES

LICENSED ARCHITECT JAMES FORREST C-26222 REG. 12/31/21 STATE OF CALIFORNIA

DEPARTMENT OF PUBLIC WORKS

CITY ENGINEER

	DATE:
	12/01/2019
	12/01/2019
	12/01/2019
	12/01/2019
	12/01/2019

GARY LEE MOORE, PE, ENV SP
ARCHITECTURAL DIVISION
LIC. NO.: C-26222

ARCHITECT/ENGINEER: SJF
DESIGNED BY: SJF
DRAWN BY: GSF
CHECKED BY: SJF
APPROVED BY: SJF

CITY OF LOS ANGELES

VERTICAL CONTROL:
HORIZONTAL CONTROL:

SHEET TITLE: DETAILS

PROJECT: GRANADA HILLS POOL AND BATHHOUSE REPLACEMENT PROJECT

ADDRESS: 16730 CHATSWORTH STREET GRANADA HILLS, CA 91344

BID SET
PROJECT ISSUE DATE:06/22/21

WORK ORDER NO. #E170517

PLAN FILE NO.

DRAWING NO. SP-9

SHEET O F SHEETS

THE CITY OF LOS ANGELES OR ITS OFFICERS OR AGENTS SHALL NOT BE RESPONSIBLE FOR THE ACCURACY OR COMPLETENESS OF ELECTRONIC COPIES OF THIS PLAN SHEET.

REVISION DATES (DESIGN STAGE ONLY)

TTLB TEMPLATE REVISION DATE: 02/2013
SHEET ISSUE DATE: 12/01/19
FILE PATH: BIM 360://Granada Hills Pool Renovation/A_Granada-Hills_2017.rvt

PLOTTED: 6/26/2018 2:53:10 PM