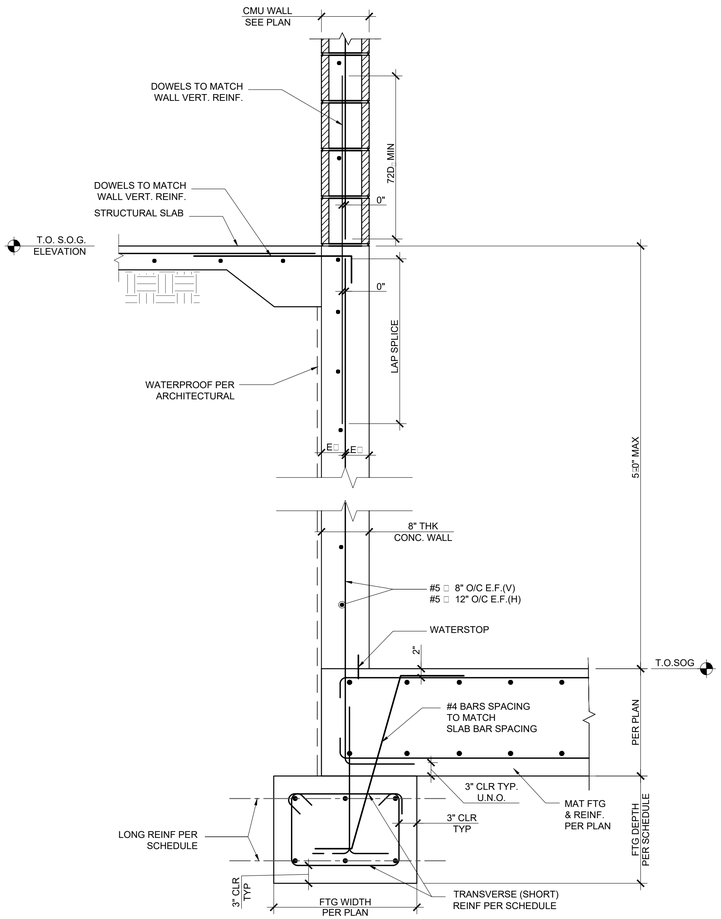

4 PIT AT STRUCTURAL SLAB
SCALE: N.T.S.

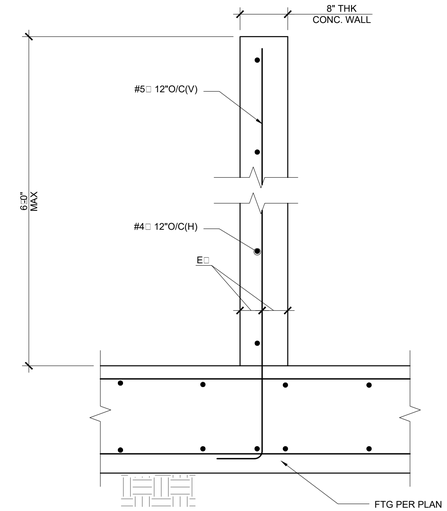

2 DETAIL
SCALE: N.T.S.

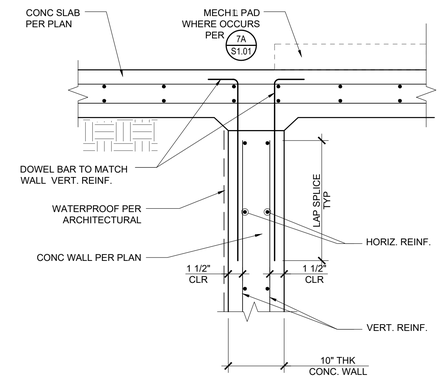

3 DETAIL
SCALE: N.T.S.

VCA ENGINEERS, INC.
CIVIL • STRUCTURAL • MECHANICAL
2151 Michelson Dr. #240
Irvine, CA 92612
Tel. 949.679.0870
Fax. 949.679.9370
Project No. D312

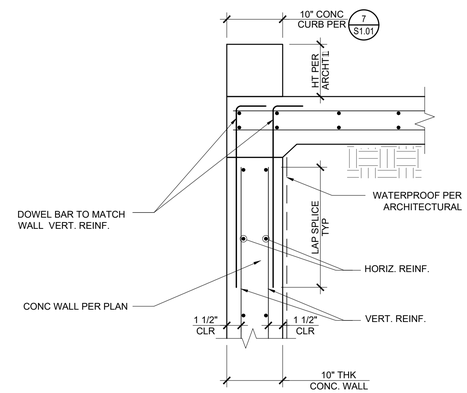

5 DETAIL
SCALE: N.T.S.

BALANCE OF INFO
SEE DET 6 S4.01

This has been reviewed by the Bureau of Engineering, Geotechnical Engineering Division and found to be in conformance with our recommendations in the reports dated August 22, 2017, October, 25 2018 and February 18, 2020

RCE/GE DATE

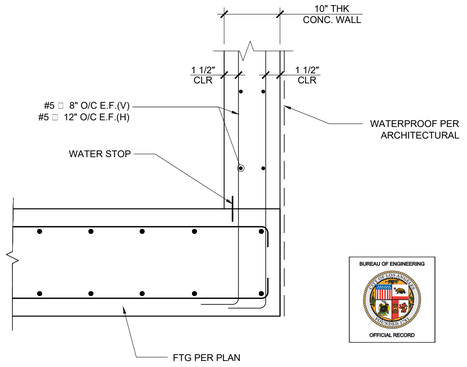

6 DETAIL
SCALE: N.T.S.

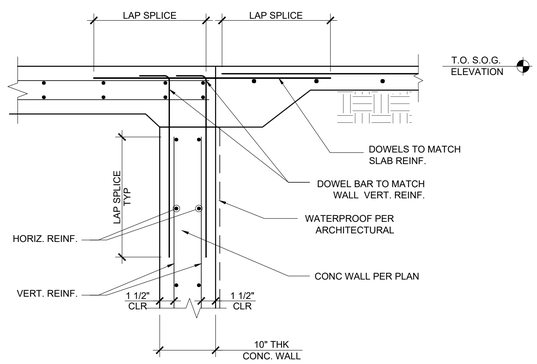

7 DETAIL
SCALE: N.T.S.

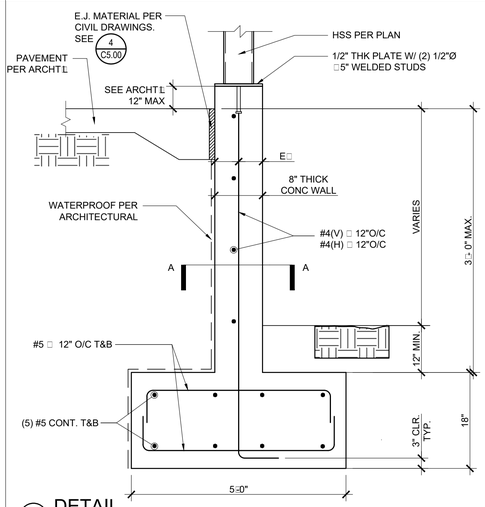

8 DETAIL
SCALE: N.T.S.

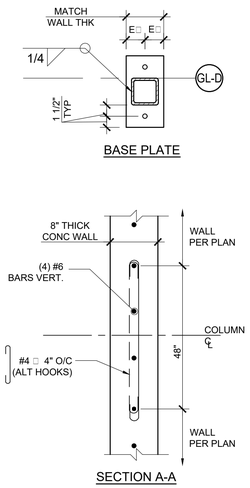

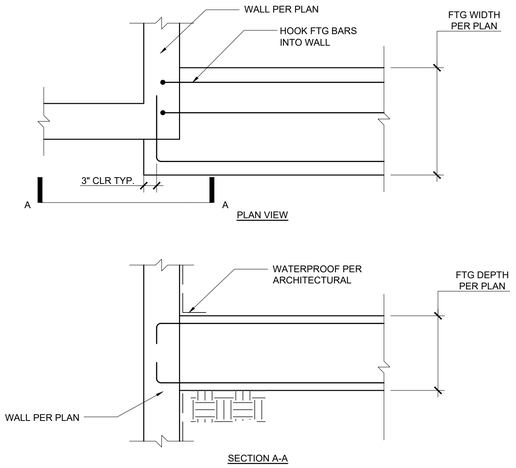

9 DETAIL
SCALE: N.T.S.

THE CITY OF LOS ANGELES OR ITS OFFICERS OR AGENTS SHALL NOT BE RESPONSIBLE FOR THE ACCURACY OR COMPLETENESS OF ELECTRONIC COPIES OF THIS PLAN SHEET.

TTLB TEMPLATE REVISION DATE: 02/2013
SHEET ISSUE DATE: 04/08/14
FILE PATH: C:\Users\Y□in\Do□□ents\S-GRANADA HILL-V17_Y□in.rvt

REVISION DATES
(DESIGN STAGE ONLY)

BUREAU OF ENGINEERING
CITY OF LOS ANGELES

NO.	REVISION DESCRIPTION	DATE	BY

BUILDING NO. -

INDEX NO. RP-300118

REGISTERED PROFESSIONAL ENGINEER
JOHN-KEON YOUNG
No. S4029
Exp. 9/30/20
STRUCTURAL
STATE OF CALIFORNIA

DEPARTMENT OF PUBLIC WORKS
CITY OF LOS ANGELES

GARY LEE MOORE, PE, ENV SP
CITY ENGINEER

ARCHITECTURAL DIVISION

		DATE:
ARCHITECT/ENGINEER:	JHON SPARANO LIC. NO.: LICENSE	11/01/18
DESIGNED BY:	SPARANO □MOONEY ARCHITECTURE	11/01/18
DRAWN BY:	ALEX. □	11/01/18
CHECKED BY:	YOUNG, NAM	11/01/18
APPROVED BY:		11/01/18

BUREAU OF ENGINEERING
OFFICIAL RECORD

BID SET
PROJECT ISSUE DATE: 06/22/21

VERTICAL CONTROL:
HORIZONTAL CONTROL:

SHEET TITLE: FOUNDATION DETAILS

PROJECT: GRANADA HILLS POOL AND BATH HOUSEREPLACEMENT PROJECT

ADDRESS: 16730 CHATSWORTH STREET GRANADA HILLS, CA 91344

WORK ORDER NO.
#E170517

PLAN FILE NO.

DRAWING NO.
S4.04
SHEET OF SHEETS