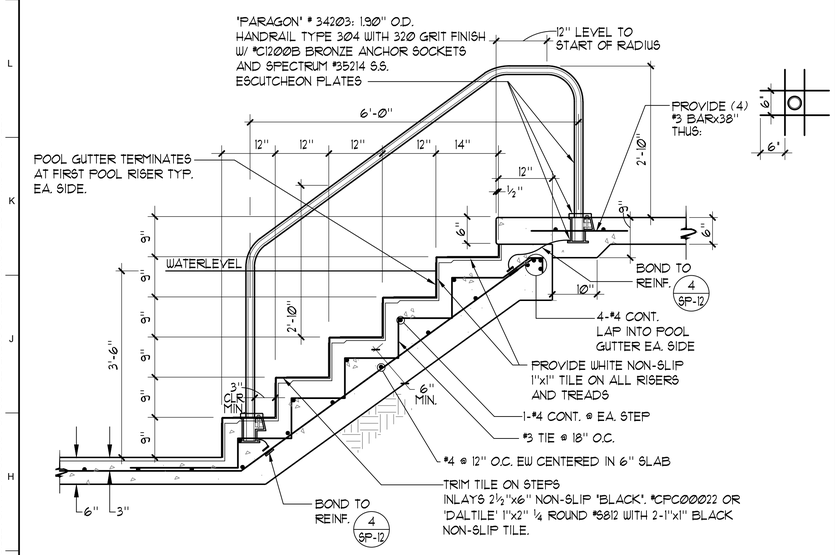

1 HANDRAIL DETAIL ¾"=1'-0"

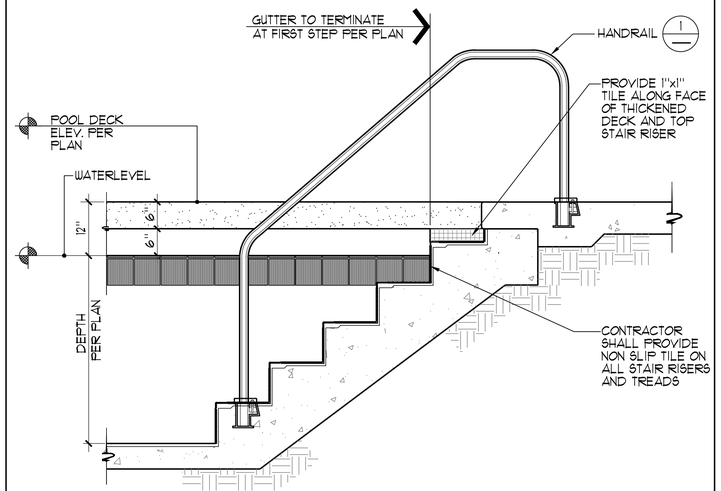

2 GUTTER EDGE AT STAIRS ¾"=1'-0"

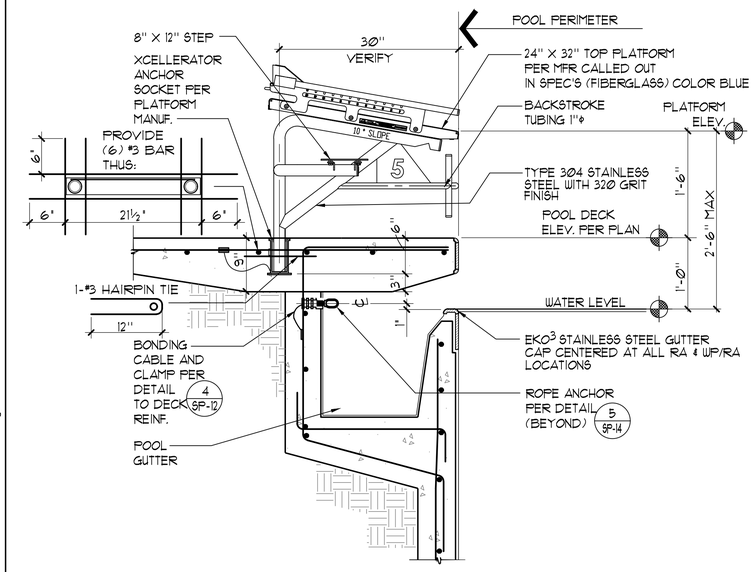

3 RACING PLATFORM 1"=1'-0"

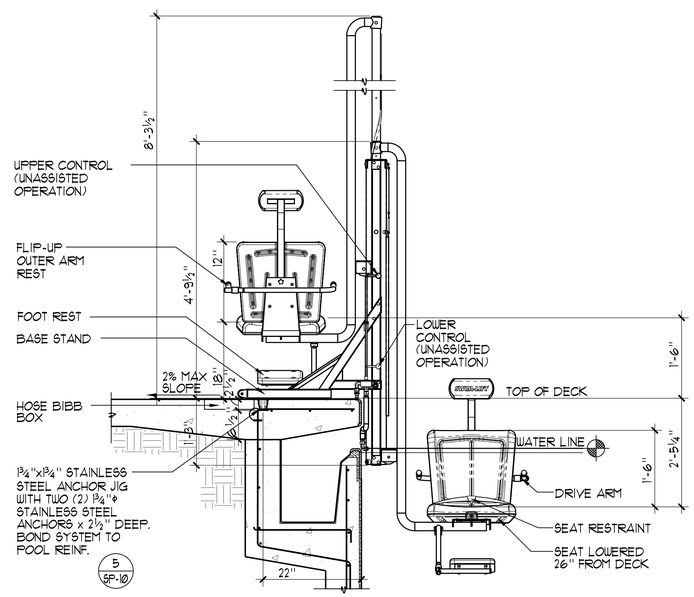

4 ACCESSIBLE LIFT ¾"=1'-0"

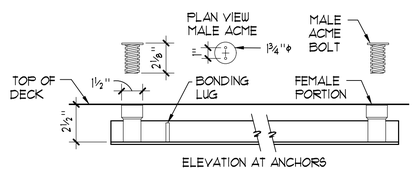

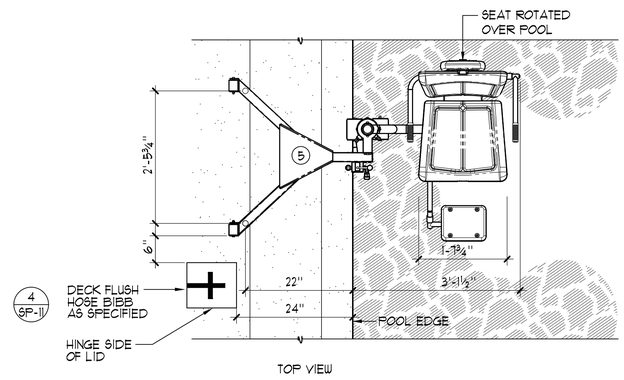

NOTES:

1. GALLATIN #71336 PROVIDE DOMESTIC WATER, SOURCE IN FLUSH MOUNTED DECK BOX ADJACENT TO LIFT. (300 lb. CAPACITY MIN.)
2. CLEAR DECK SPACE SHALL BE PROVIDED PARALLEL TO THE WATER 36" WIDE x 48" MINIMUM FROM A LINE LOCATED 2" BEHIND THE REAR EDGE OF THE SEAT.
3. ACTUATOR HOSE TO BE BRAIDED STAINLESS STEEL HOSE. LENGTH AS NEEDED.
4. ACTUATOR HOSE TO BE ATTACHED TO LIFT FRAME WITH NYLON ZIP TIES. TRIM ANY EXCESS LENGTH FROM ZIP TIES.
5. GUSSET COVER PLATE TO BE ATTACHED REQUIRING A TOOL FOR REMOVAL.
6. POOL LIFT SHALL BE LOCATED WHERE THE WATER LEVEL IS AT LEAST 36" AND DOES NOT EXCEED 48" DEEP , UNLESS ENTIRE POOL IS GREATER THAT 48" DEEP. (CBC SECTION 11B-1009.2.1)
7. ON THE RAISED POSITION, THE CENTERLINE OF THE SEAT SHALL BE LOCATED OVER THE DECK AND 16" MINIMUM FROM THE EDGE OF THE POOL. THE DECK SURFACE BETWEEN THE CENTERLINE OF THE SEAT AND THE POOL EDGE SHALL HAVE A 2% MAX. SLOPE. (CBC SECTION 11B-1009.2.2)
8. CLEAR DECK SPACE SHALL BE PROVIDED ON SIDE OF SEAT OPPOSITE THE WATER PARALLEL TO THE WATER 36" WIDE x 48" MINIMUM FROM A LINE LOCATED 12" BEHIND THE REAR EDGE OF THE SEAT. THE CLEAR SPACE SHALL HAVE A 2% MAX. SLOPE. (CBC SECTION 11B-1009.2.3)
9. THE HEIGHT OF THE LIFT SEAT SHALL BE DESIGNED TO ALLOW A STOP AT 17" MIN. TO 19" MAX. MEASURED FROM THE DECK TO THE TOP OF THE SEAT SURFACE WHEN IN THE RAISED POSITION. (CBC SECTION 11B-1009.2.4)
10. THE SEAT SHALL BE RIGID AND 17" MIN. TO 19" MAX. WIDE. THE LIFT SEAT SHALL HAVE A BACK SUPPORT 12" MIN. TALL. (CBC SECTION 11B-1009.2.4)
11. FOOTRESTS SHALL BE PROVIDED, EXCEPT FOR SPA LIFTS, AND SHALL MOVE WITH THE SEAT. LIFT SHALL HAVE TWO ARMRESTS. THE ARMREST POSITIONED OPPOSITE THE WATER SHALL BE REMOVABLE OR SHALL FOLD CLEAR OF THE SEAT WHEN THE SEAT IS IN THE RAISED POSITION. (CBC SECTION 11B-1009.2.6)
12. THE LIFT SHALL BE CAPABLE OF UNASSISTED OPERATION FROM BOTH THE DECK AND WATER LEVELS. CONTROLS AND OPERATING MECHANISMS SHALL BE OPERABLE WITH ONE HAND AND SHALL BE UNOBSTRUCTED WHEN THE LIFT IS IN USE (CBC SECTION 11B-309.4). LIFT MUST BE STABLE AND NOT PERMIT UNINTENDED MOVEMENT WHEN A PERSON IS GETTING INTO OR OUT OF THE SEAT. (CBC SECTION 11B-1009.2.7)
13. THE LIFT SHALL BE DESIGNED SO THAT THE SEAT WILL SUBMERGE TO A WATER DEPTH OF 18" MIN. BELOW THE STATIONARY WATER LEVEL. (CBC SECTION 11B-1009.2.8)
14. LIFT SEAT MUST HAVE AN OCCUPANT RESTRAINT FOR USE BY THE OCCUPANT OF THE SEAT AND THE RESTRAINT MUST MEET THE STANDARDS FOR OPERABLE CONTROLS IN COMPLIANCE WITH CBC SECTION 11B-1009.2.4 AND SECTION 11B-309.

BUREAU OF ENGINEERING OFFICIAL RECORD

AQUATIC DESIGN GROUP
2228 Faraday Ave. Carlsbad, CA 92008
AquaticDesignGroup.com
760-438-2400

ENGINEERING
CITY OF LOS ANGELES

BUREAU OF ENGINEERING

NO.	REVISION DESCRIPTION	DATE	BY

BUILDING NO. -

INDEX NO. RP-300118

LICENSED ARCHITECT FRED J. SAUER C-26222 REN. 12/31/21 STATE OF CALIFORNIA

DEPARTMENT OF PUBLIC WORKS

CITY ENGINEER	DATE:
	12/01/2019
	12/01/2019
	12/01/2019
	12/01/2019
	12/01/2019

GARY LEE MOORE, PE, ENV SP
ARCHITECTURAL DIVISION
LIC. NO.: C-26222

ARCHITECT/ENGINEER: SJF
DESIGNED BY: SJF
DRAWN BY: GSF
CHECKED BY: SJF
APPROVED BY: SJF

CITY OF LOS ANGELES

VERTICAL CONTROL:
HORIZONTAL CONTROL:

SHEET TITLE: DETAILS

PROJECT: GRANADA HILLS POOL AND BATHHOUSE REPLACEMENT PROJECT

ADDRESS: 16730 CHATSWORTH STREET GRANADA HILLS, CA 91344

BID SET
PROJECT ISSUE DATE:06/22/21

WORK ORDER NO. #E170517

PLAN FILE NO.

DRAWING NO. SP-8

SHEET O F SHEETS

THE CITY OF LOS ANGELES OR ITS OFFICERS OR AGENTS SHALL NOT BE RESPONSIBLE FOR THE ACCURACY OR COMPLETENESS OF ELECTRONIC COPIES OF THIS PLAN SHEET.

TTLB TEMPLATE REVISION DATE: 02/2013
SHEET ISSUE DATE: 12/01/19
FILE PATH: BIM 360://Granada Hills Pool Renovation/A_Granada-Hills_2017.rvt

REVISION DATES (DESIGN STAGE ONLY)

PLOTTED 6/26/2018 2:53:10 PM