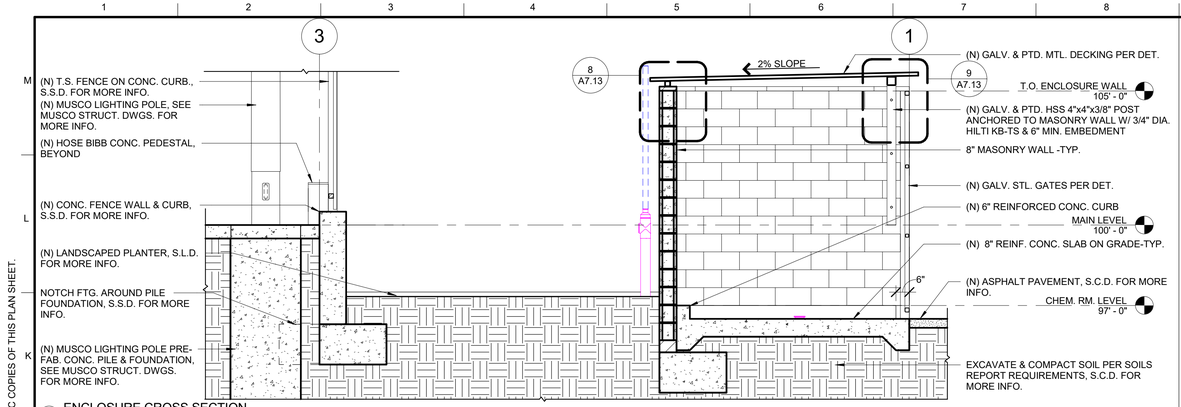

4 ENCLOSURE CROSS SECTION
3/8" = 1'-0"

FINISH:

1. MASONRY BLOCK: BL-01, SEE MASONRY FIN. DESCRIPTION ON SHEET A8.50.
2. PROVIDE ANTI-GRAFFITI COATING OVER MASONRY WALLS, LAMC 91.6306

NOTES:

1. G.C. SHALL PROVIDE SHOP DRAWINGS FOR REVIEW AND APPROVAL PRIOR TO FABRICATION AND INSTALLATION.
2. ALL METAL WORK SHALL COMPLY WITH THE SSPWC "GREENBOOK" & ALL PAINTING AND WELDING SHALL FOLLOW REQUIREMENTS OF BCA FOR SHOP AND FIELD INSPECTION.
3. ALL CONNECTIONS SHALL BE FULLY WELDED & ALL WELDS SHALL BE A MIN. OF 1/8" THICK W/ COMPLETE PENETRATION TENSILE STRENGTH IN CONFORMANCE WITH SSPWC SECTION 304-1.9
4. GRIND ALL WELDS SMOOTH & REMOVE ALL LOOSE MILL, SCALE, RUST, OIL, & GREASE PRIOR TO PAINTING.
5. ALL METAL COMPONENTS SHALL BE SHOP PRIMED WITH ONE 2 MIL. COAT ALKYD CORROSION INHIBITING PRIMER AND TWO 1.5 MIL. COATS OF SEMI-GLOSS ACRYLIC LATEX ENAMEL; COLOR TO BE CHOSEN BY ARCHITECT.
6. ANY PAINTED SURFACE DAMAGED DURING DELIVERY OR INSTALLATION SHALL BE SANDED SMOOTH, PRIMED & REPAINTED WITH TWO COATS OF THE SPECIFIED ACRYLIC LATEX ENAMEL.
7. FOR ADDITIONAL DETAILS SEE STRUCTURAL DRAWINGS.

BUREAU OF ENGINEERING
OFFICIAL RECORD

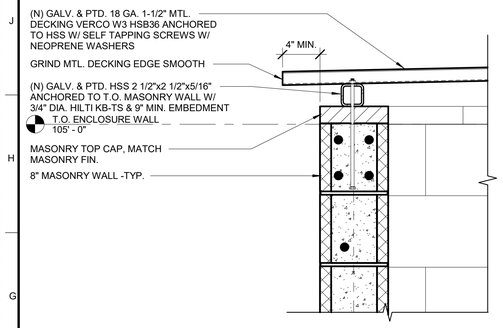

8 ROOF EAVE DETAIL 2
1 1/2" = 1'-0"

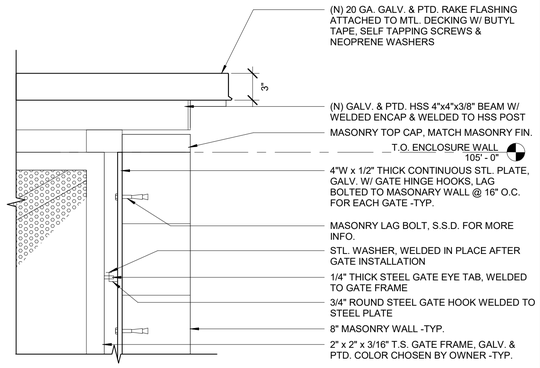

5 HINGE ELEVATION DETAIL
1 1/2" = 1'-0"

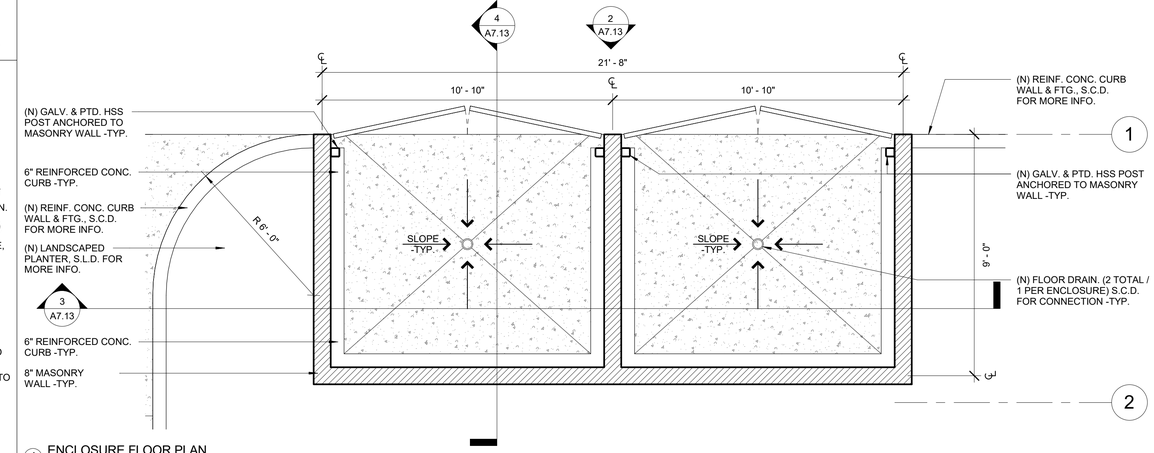

1 ENCLOSURE FLOOR PLAN
3/8" = 1'-0"

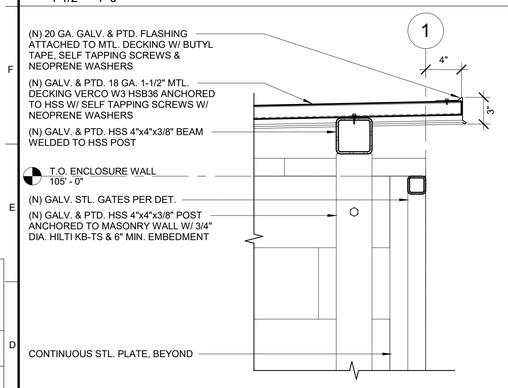

9 ROOF EAVE DETAIL 3
1 1/2" = 1'-0"

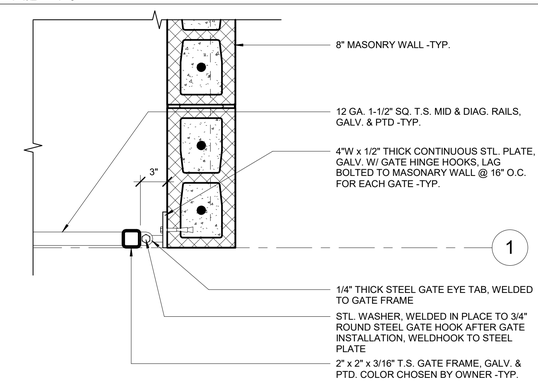

6 HINGE PLAN DETAIL
1 1/2" = 1'-0"

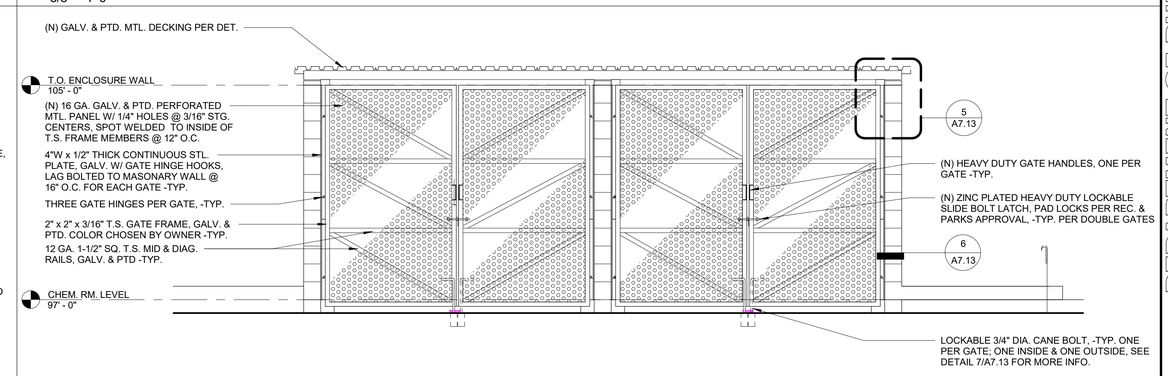

2 ENCLOSURE ELEVATION
3/8" = 1'-0"

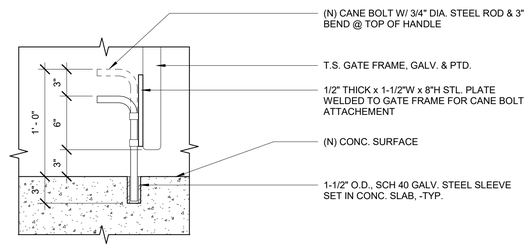

7 CANE BOLT DETAIL
1 1/2" = 1'-0"

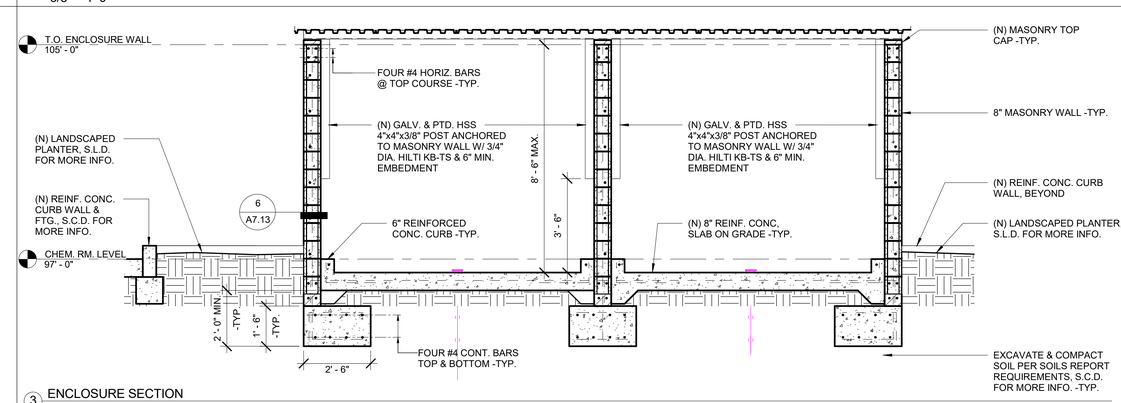

3 ENCLOSURE SECTION
3/8" = 1'-0"

THE CITY OF LOS ANGELES OR ITS OFFICERS OR AGENTS SHALL NOT BE RESPONSIBLE FOR THE ACCURACY OR COMPLETENESS OF ELECTRONIC COPIES OF THIS PLAN SHEET.

TTLB TEMPLATE REVISION DATE: 02/2013
SHEET ISSUE DATE: 02/23/20
FILE PATH: BIM 360://Granada Hills Pool Renovation/A_Granada-Hills_2017.rvt

REVISION DATES (DESIGN STAGE ONLY)

CITY OF LOS ANGELES
DEPARTMENT OF PUBLIC WORKS
BUREAU OF ENGINEERING
ENGINEERING
CITY OF LOS ANGELES

NO.	REVISION DESCRIPTION	DATE	BY

BUILDING NO. -
INDEX NO. RP-300118

LICENSED ARCHITECT JOHN P. SPARANO C-26244 EXP. 1-30-21 STATE OF CALIFORNIA

GARY LEE MOORE, PE, ENV SP
CITY ENGINEER

		DATE:
ARCHITECT/ENGINEER:	JOHN SPARANO LIC. NO.: C-26244	03/03/20
	ARCHITECTURAL DIVISION	03/03/20
DESIGNED BY:	SPARANO + MOONEY ARCHITECTURE	03/03/20
DRAWN BY:	JORGE BELTRAN	03/03/20
CHECKED BY:	LUDWING JUAREZ	03/03/20
APPROVED BY:	JOHN SPARANO	03/03/20

VERTICAL CONTROL:
HORIZONTAL CONTROL:

SHEET TITLE: TRASH AND RECYCLING ENCLOSURE PLANS & DETAILS

PROJECT: GRANADA HILLS POOL AND BATHHOUSE REPLACEMENT PROJECT

ADDRESS: 16730 CHATSWORTH STREET GRANADA HILLS, CA 91344

BID SET
PROJECT ISSUE DATE: 06/22/21

WORK ORDER NO. #E170517
PLAN FILE NO.
DRAWING NO. A7.13
SHEET OF SHEETS

PLOTTED:8/18/2020 1:23:05 PM