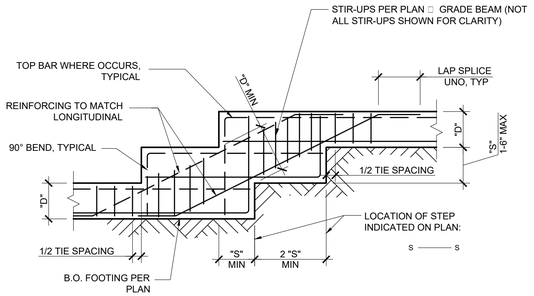

NOTES:
1. FOR FTG REINFORCING SEE PLANS AND DETAILS.
2. VERTICAL WALL DOWELS SHALL EXTEND TO BOTTOM OF FOOTING.
3. TRANSVERSE STEEL NOT SHOWN FOR CLARITY.
4. TWO STEPS ARE SHOWN, DETAIL FOR SINGLE STEP OR ADDITIONAL STEPS IS SIMILAR.

1 TYPICAL STEPPED FOOTING/GRADE BEAM
SCALE: N.T.S.

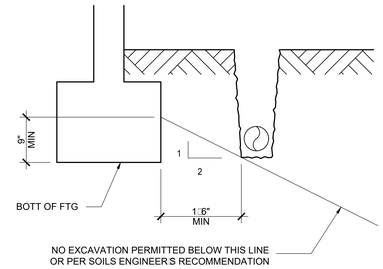

NOTE:
THE CONTRACTOR SHALL BE RESPONSIBLE FOR SHORING OR OTHERWISE MAINTAINING THE SIDES OF THE EXCAVATION FROM CAVE-INS UNTIL ALL BACKFILL IS COMPLETED PER SPECIFICATIONS AND GEOTECHNICAL REPORT.

2 TYPICAL EXCAVATION PARALLEL TO FOOTING
SCALE: N.T.S.

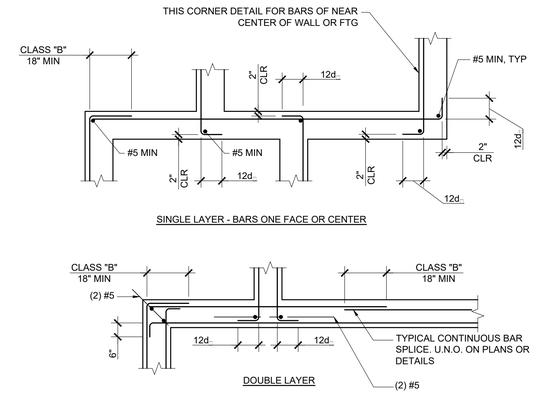

3 REINF BAR SPLICES AT CONT WALL FTGS INTERSECTIONS
SCALE: N.T.S.

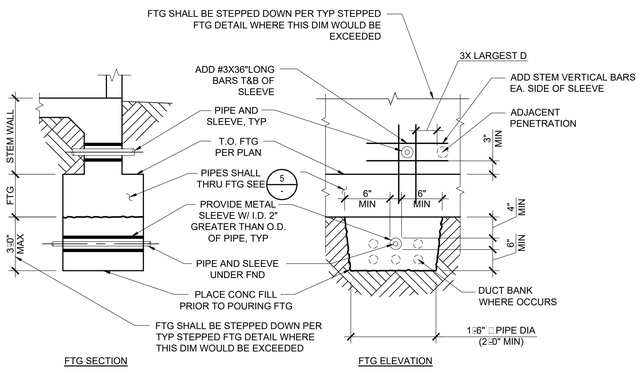

NOTE:
PIPES GREATER THAN 8" IN SIZE, BUNDLES OR BANKS NOT SPECIFICALLY SHOWN ON THE STRUCTURAL PLANS ARE NOT ALLOWED TO BE PLACED WITHOUT OBTAINING EOR APPROVAL.

4 PIPE TRENCH FOOTING DETAIL
SCALE: N.T.S.

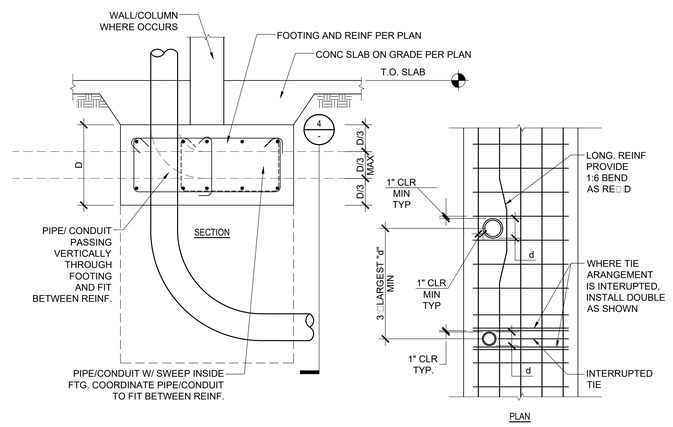

SEE MEP DRAWINGS FOR ADDITIONAL INFORMATION

5 PIPE/ CONDUIT SWEEP THRU FOOTING
SCALE: N.T.S.

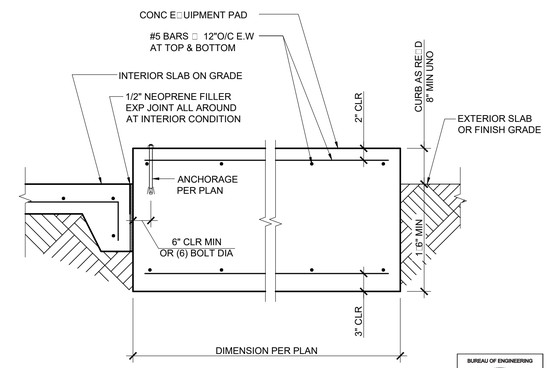

BUREAU OF ENGINEERING
OFFICIAL RECORD

6 TYPICAL ISOLATED E□UIPMENT PAD
SCALE: N.T.S.

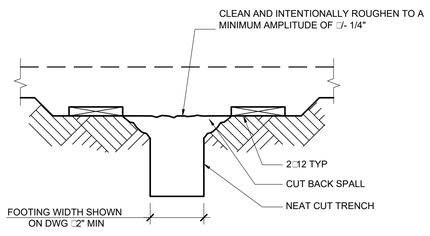

NOTES:
1. FOOTINGS POURED AGAINST EARTH ARE SUBJECT TO APPROVAL OF GEOTECHNICAL ENGINEER.
2. FOOTING WIDTHS SHALL NOT BE MORE THAN 4" WIDER THAN SHOWN ON PLAN.
3. FORMWORK NOT PERMITTED BELOW GRADE.
4. FOUNDATION CONCRETE MAY BE PLACED DIRECTLY INTO NEAT EXCAVATIONS PROVIDED THE FOUNDATION TRENCH WALLS ARE STABLE AS DETERMINED BY THE GEOTECHNICAL ENGINEER. THE 2□12 SHOWN IS MANDATORY TO ENSURE CLEAN EXCAVATIONS IMMEDIATELY PRIOR TO AND DURING THE PLACING OF CONCRETE.
5. STAKES NOT PERMITTED IN THE FOOTING AREA.

7 FOOTING POURED AGAINST EARTH
SCALE: N.T.S.

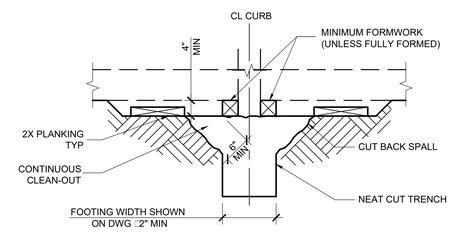

NOTES:
1. FOOTINGS POURED AGAINST EARTH ARE SUBJECT TO APPROVAL OF GEOTECH. ENGR.
2. FOOTING WIDTHS SHALL NOT BE MORE THAN 4" WIDER THAN SHOWN ON PLAN.
3. FORMWORK NOT PERMITTED BELOW GRADE UNLESS FULLY FORMED.
4. FOUNDATION CONCRETE MAY BE PLACED DIRECTLY INTO NEAT EXCAVATIONS PROVIDED THE FOUNDATION TRENCH WALLS ARE STABLE AS DETERMINED BY THE GEOTECHNICAL ENGINEER. THE MINIMUM FORMWORK SHOWN ON THE DRAWINGS IS MANDATORY TO ENSURE CLEAN EXCAVATIONS IMMEDIATELY PRIOR TO AND DURING THE PLACING OF CONCRETE.
5. CONT CLEAN-OUT STAKES NOT PERMITTED IN THE FTG AREA.
6. AFTER CONCRETE HAS SET, REMOVE LAITANCE AND SCUM.

8 FOOTING POURED AGAINST EARTH
SCALE: N.T.S.

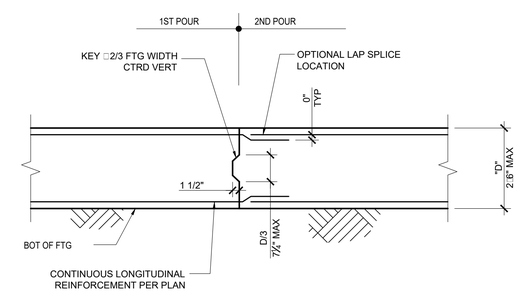

NOTES:
1. PROVIDE ADE□UATE SUPPORT FOR LONGITUDINAL REINF WITHIN 6" OF JT USING FTG TIES, VERT DOWELS OR OTHER MEANS.
2. SECTIONS SHOWN ARE AT CENTER OF FTG IN LONGITUDINAL DIRECTION.

9 CONSTRUCTION JOINT AT FOOTING/GRADE BEAM
SCALE: N.T.S.

MCA ENGINEERS, INC.
CIVIL • STRUCTURAL • MECHANICAL • ELECTRICAL
2151 Michelson Dr. #240
Irvine, CA 92612
Tel. 949.679.0870
Fax. 949.679.9370
Project No. D312

NO.	REVISION DESCRIPTION	DATE	BY

INDEX NO. RP-300118
BUILDING NO. -

BUREAU OF ENGINEERING
ENGINEERING
CITY OF LOS ANGELES

REGISTERED PROFESSIONAL ENGINEER
DONALD KEUN WU
No. S4029
Exp. 9/30/20
CIVIL
STATE OF CALIFORNIA

DEPARTMENT OF PUBLIC WORKS
CITY OF LOS ANGELES

GARY LEE MOORE, PE, ENV SP
ARCHITECTURAL DIVISION

CITY ENGINEER		DATE:	
ARCHITECT/ENGINEER:	JHON SPARANO LIC. NO.: LICENSE	11/01/18	
DESIGNED BY:	SPARANO □ MOONEY ARCHITECTURE	11/01/18	
DRAWN BY:	ALEX, □	11/01/18	
CHECKED BY:	YOUNG, NAM	11/01/18	
APPROVED BY:		11/01/18	

VERTICAL CONTROL:
HORIZONTAL CONTROL:

SHEET TITLE: TYPICAL DETAILS

PROJECT: GRANADA HILLS POOL AND BATH HOUSEREPLACEMENT PROJECT

ADDRESS: 16730 CHATSWORTH STREETGRANADA HILLS, CA 91344

BID SET
PROJECT ISSUE DATE: 06/22/21

WORK ORDER NO. #E170517
PLAN FILE NO.
DRAWING NO. S1.02
SHEET OF SHEETS

THE CITY OF LOS ANGELES OFFICERS OR AGENTS SHALL NOT BE RESPONSIBLE FOR THE ACCURACY OR COMPLETENESS OF ELECTRONIC COPIES OF THIS PLAN SHEET.

TTLB TEMPLATE REVISION DATE: 02/2013
SHEET ISSUE DATE: 04/08/14
FILE PATH: C:\Users\Y□in\Do□□ents\S-GRANADA HILL-V17_Y□in.rvt

REVISION DATES (DESIGN STAGE ONLY)