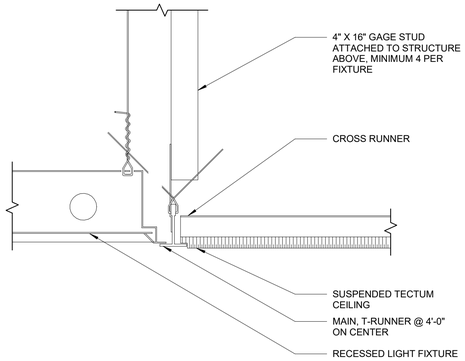

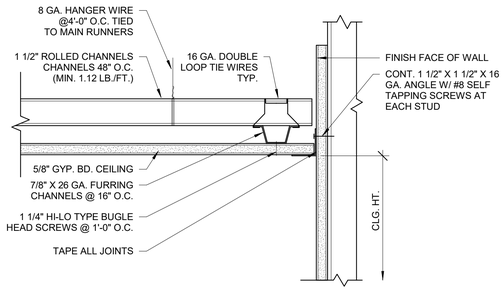

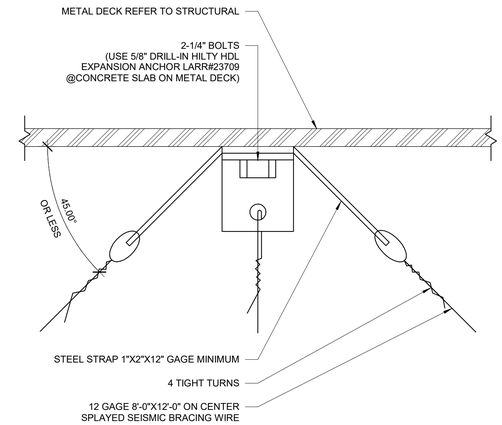

NOTE:

1. TEST 1 OUT OF 2 DRILL-IN EXP. ANCHOR FOR 440 OUNDS IN TENSON

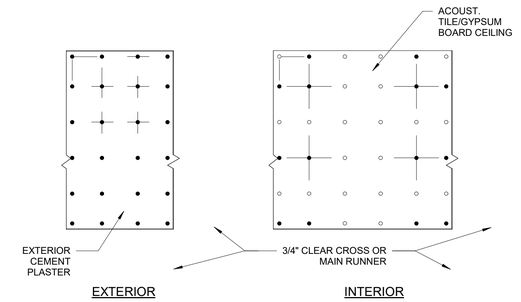

REFLECTED CEILING PLANS

NOTES:

1. TIE TWO ADJACENT WALLS TO CEILING MAIN AND CROSS RUNNER.
2. INSTALL CEILING GRID USING NO. 12 GA. SPLAY WIRE HANGERS AT 45 DEG., 90 DEG. TO EACH OTHER (4 WIRES) BEGINNING 4'-0" FROM STARTING POINT OF GRID AND TILE LAYOUT AND IN ONE DIECTIONS AT 12 FEET O.C. & 8'-0" O.C. OTHER DIRECTION THEREAFTER.
3. CEILING THAT EXCEEDS 25 FEET ON BOTH DIRECTIONS MUST HAVE A MINIMUM WALL ANGLE SIZE OF AT LEAST A 2" HORIZONTAL LEG SHALL BE USED AT PERIMETER WALLS AND INTERIOR FULL HEIGHT PARTITIONS. THE FIRST CEILING TILE SHALL MAINTAIN 3/4" CLEAR FROM THE FINISH WALL SURFACE. AN EQUIVALENT ALTERNATIVE DETAIL THAT WILL PROVIDE SUFFICIENT MOVEMENT DUE TO THE ANTICIPATED LATERAL BUILDING DISPLACEMENT MAY BE USED IN LIEU OF THE LONG LEG ANGLE SUBJECT TO THE APPROVAL OF THE SUPPERINTENDENT OF BUILDING.
4. CEILING SUSPENSION SYSTEMS SHALL BE CONNECTED AND BRACED DIRECTLY TO THE STRUCTURE AT THE MEANS OF EGRESS SERVING AN OCCUPANT LOAD OF 30 OR MORE AND AT LOBBIES ACCESSORY TO GROUP OCCUPANCIES. SPACING OF VERTICAL HANGERS SHALL NOT EXCEED 2 FEET ON CENTER ALONG THE ENTIRE LENGTH OF THE MEANS OF EGRESS OR LOBBY. THESE PROVISIONS SHALL ONLY BE REQUIRED WHEN THE DISTANCE BETWEEN THE STRUCTURAL DECK AND THE SUSPENDED CEILING EXCEEDS 4 FEET.

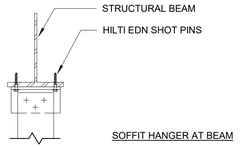

SOFFIT HANGER AT BEAM

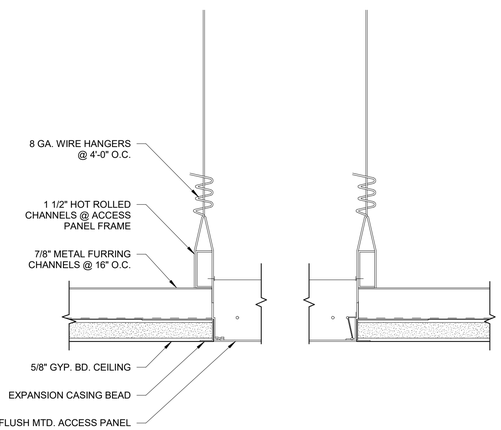

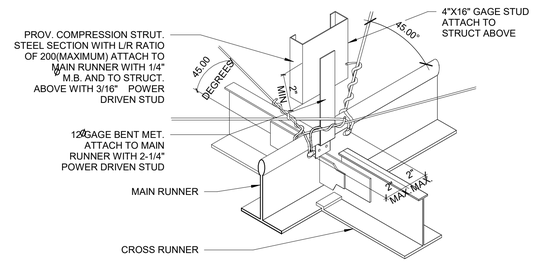

NOTES:

1. #12 GAGE SPLAY WIRE BRACING IN PLANE OF EACH RUNNER VERTICAL ANGLE -45 AT EVERY 44 SQ.FT. OF SUSPENDED ACOUSTICAL CEILING. PERIMETER END BRACING STARTS 4'-0" FROM WALL AND 12'-0" ON CENTER TO ROOMS.
2. PROVIDE UNISTRUT HORIZONTAL MEMBERS TO SUPPORT SPLAY WIRES WHENEVER THERE IS A CONFLICT WITH DUCT LOCATION AND/OR FLEXIBLE PIPING.
3. AT PLASTER SOFFIT @ ROOF PROVIDE THE FLOOWING:
   a) COMPRESSION STRUTS @ 4'-0" X 4'-0"
   b) P1001 UNISTRUT CEILING MAIN RUNNERS @ 4'-0" ON CENTER
   c) 12 GAGE WIRE BRACINGS (4'-0" X 4'-0" MODULE)

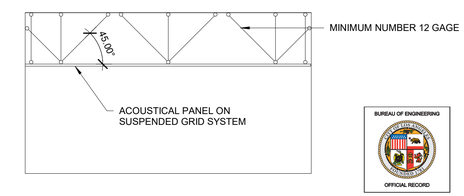

SECTION

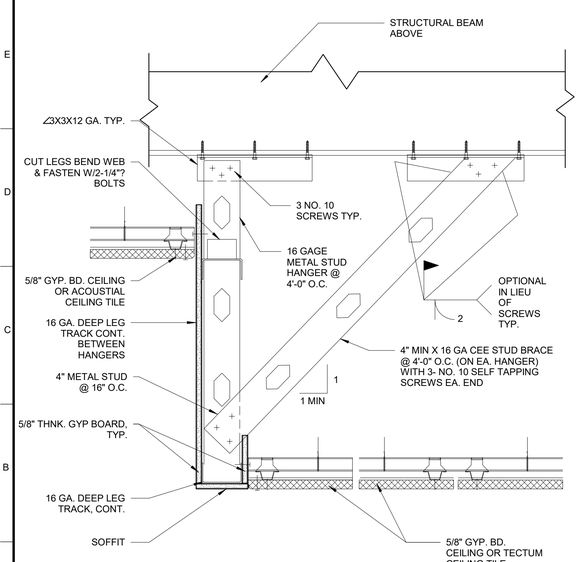

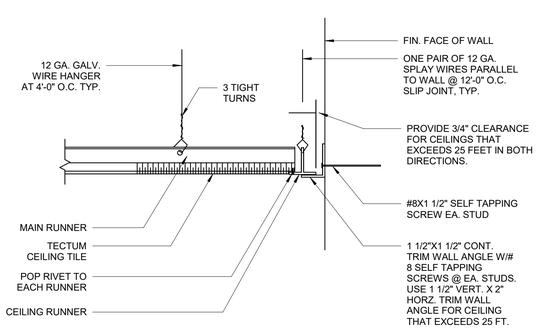

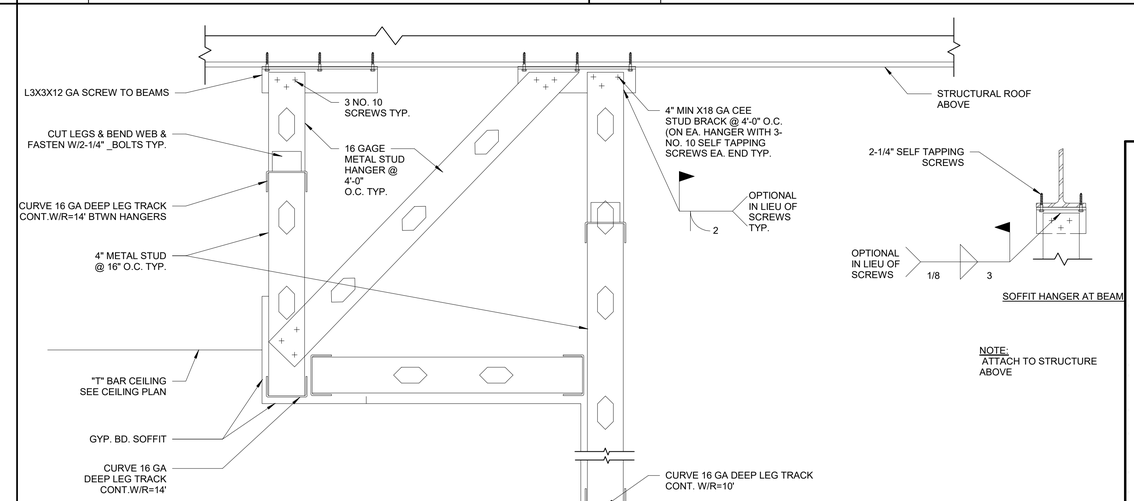

SOFFIT HANGER AT BEAM

NOTE:
ATTACH TO STRUCTURE ABOVE

THE CITY OF LOS ANGELES OR ITS OFFICERS OR AGENTS SHALL NOT BE RESPONSIBLE FOR THE ACCURACY OR COMPLETENESS OF ELECTRONIC COPIES OF THIS PLAN SHEET.

REVISION DATES: (DESIGN STAGE ONLY)

TTLB TEMPLATE REVISION DATE: 02/2013
SHEET ISSUE DATE: 02/17/09
FILE PATH: BIM 360://Granada Hills Pool Renovation/A_Granada-Hills_2017.rvt

BUREAU OF ENGINEERING
CITY OF LOS ANGELES

NO.	REVISION DESCRIPTION	DATE	BY

BUILDING NO. -
INDEX NO. RP-300118

LICENSED ARCHITECT GARY P. SPARANO C-26244 EXP. 1-30-21 STATE OF CALIFORNIA

DEPARTMENT OF PUBLIC WORKS
GARY LEE MOORE, PE, ENV SP
CITY ENGINEER

		DATE:
ARCHITECTURAL DIVISION		03/03/20
ARCHITECT/ENGINEER:	JOHN SPARANO LIC. NO.: C-26244	03/03/20
DESIGNED BY:	SPARANO + MOONEY ARCHITECTURE	03/03/20
DRAWN BY:	JORGE BELTRAN	03/03/20
CHECKED BY:	LUDWING JUAREZ	03/03/20
APPROVED BY:		03/03/20

CITY OF LOS ANGELES
VERTICAL CONTROL:
HORIZONTAL CONTROL:
SHEET TITLE: TYPICAL CEILING DETAILS
PROJECT: GRANADA HILLS POOL AND BATHHOUSE REPLACEMENT PROJECT
ADDRESS: 16730 CHATSWORTH STREET GRANADA HILLS, CA 91344

BID SET
PROJECT ISSUE DATE: 06/22/21

WORK ORDER NO. #E170517
PLAN FILE NO.
DRAWING NO. A7.60
SHEET OF SHEETS

PLOTTED:8/18/2020 1:24:06 PM