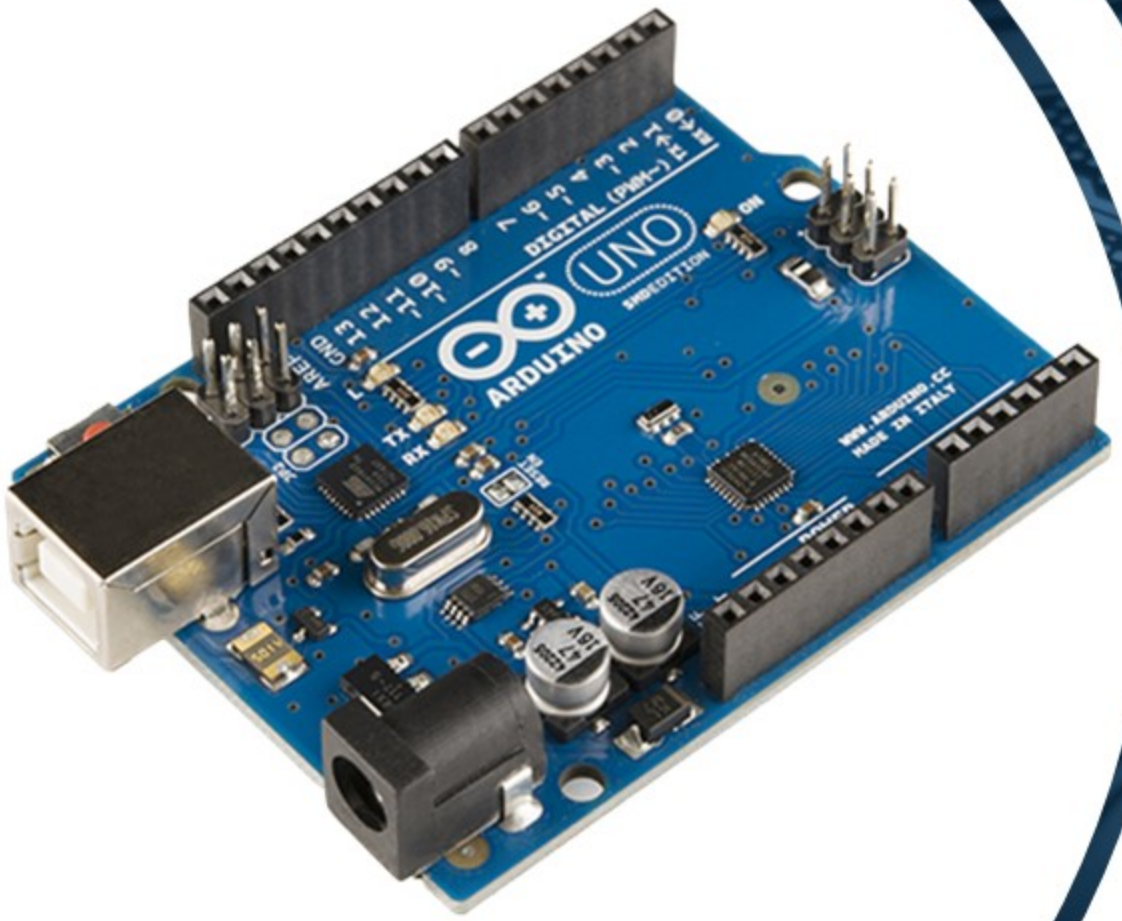

ADT

Arduino Day

Follow ADT on Instagram

Send your projects videos to ADT on Instagram

ARDUINO_DAY_TEAM

ADT

Keep Moving Forward

Follow ADT on Facebook

ADT

Keep Moving Forward

CONTENT

- Introduction
- What is a micro-controller?
- Input and Output
- What is Arduino?
- Arduino boards
- Arduino UNO (Pins)
- Analog VS. Digital
- Dealing with solderless breadboard
- Dealing with different components
- Practical exercise on connection
- Coding with Arduino Software
- What is Arduino Software (IDE)?
- Traffic lights Project
- Police Siren lights Project

Introduction

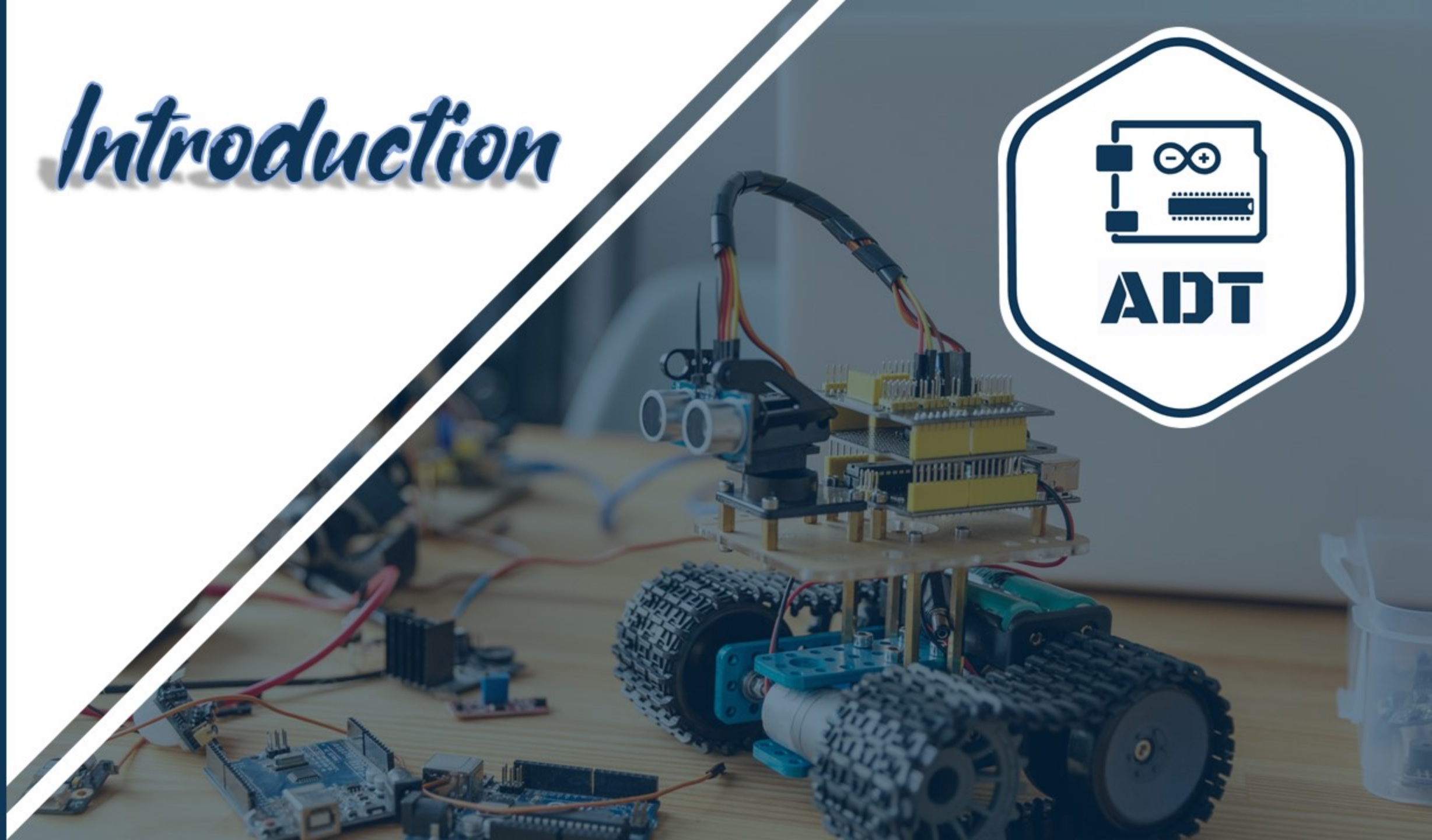

What is a micro-controller?

The interface keys for the embedded microcontroller

ROM: the fixed program you want to do.

RAM: the variable parameters.

Input and Output

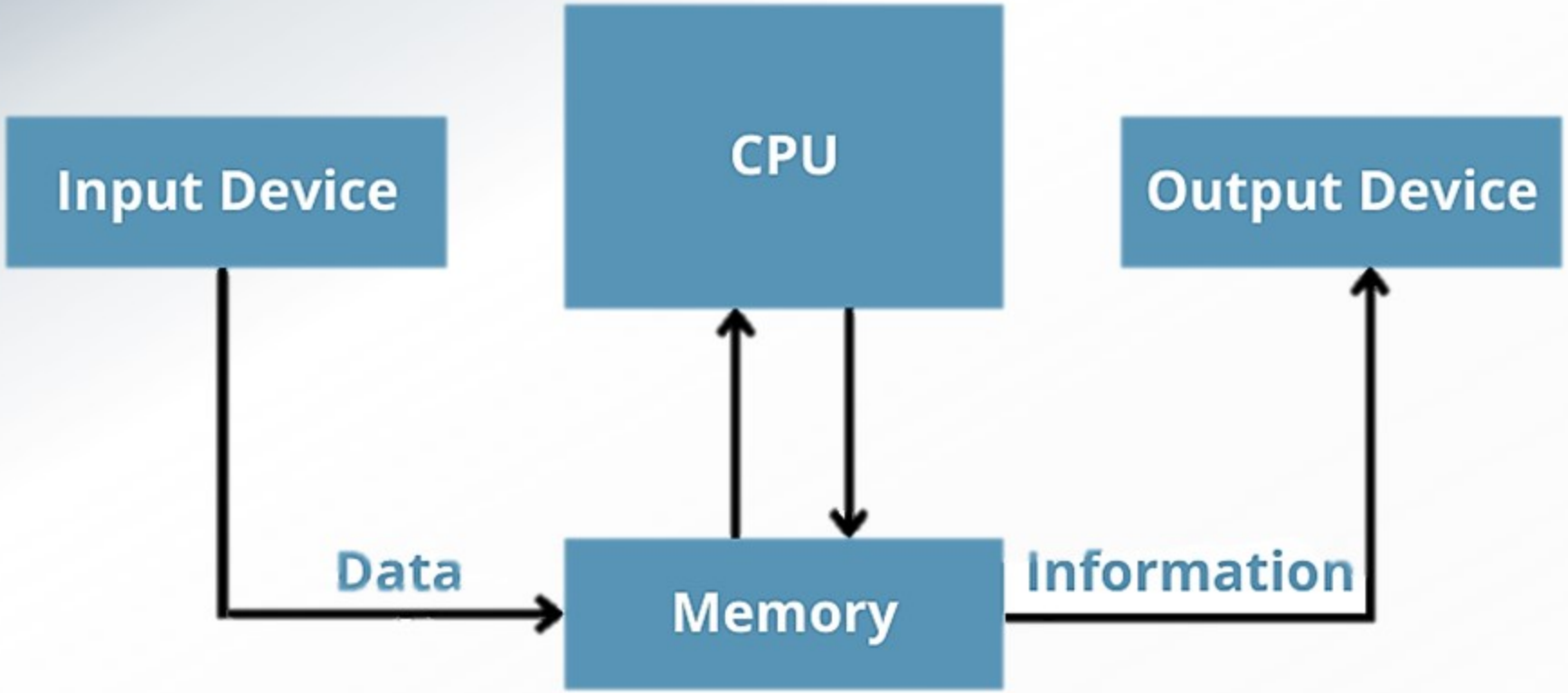

Input and Output

→ Sensors and Actuators

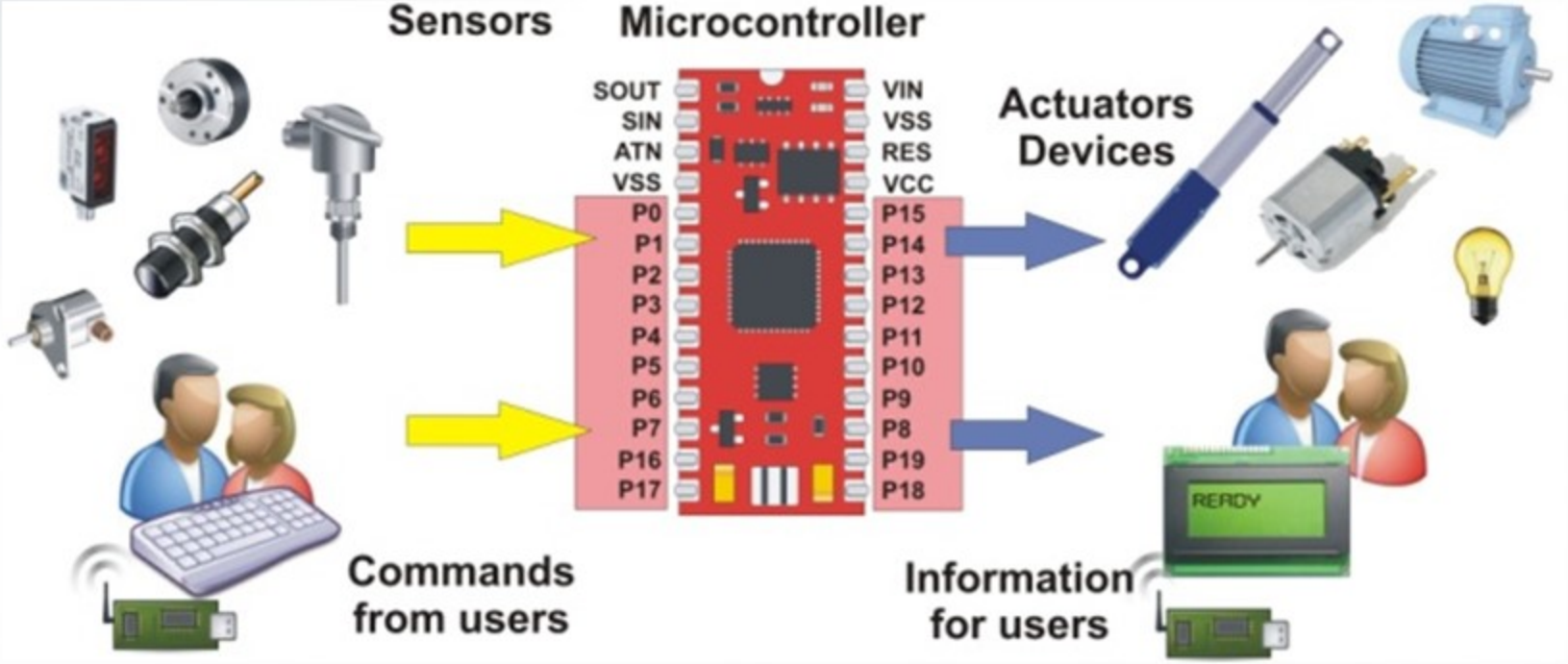

Arduino Boards

ADT

Keep Moving Forward

Arduino UNO

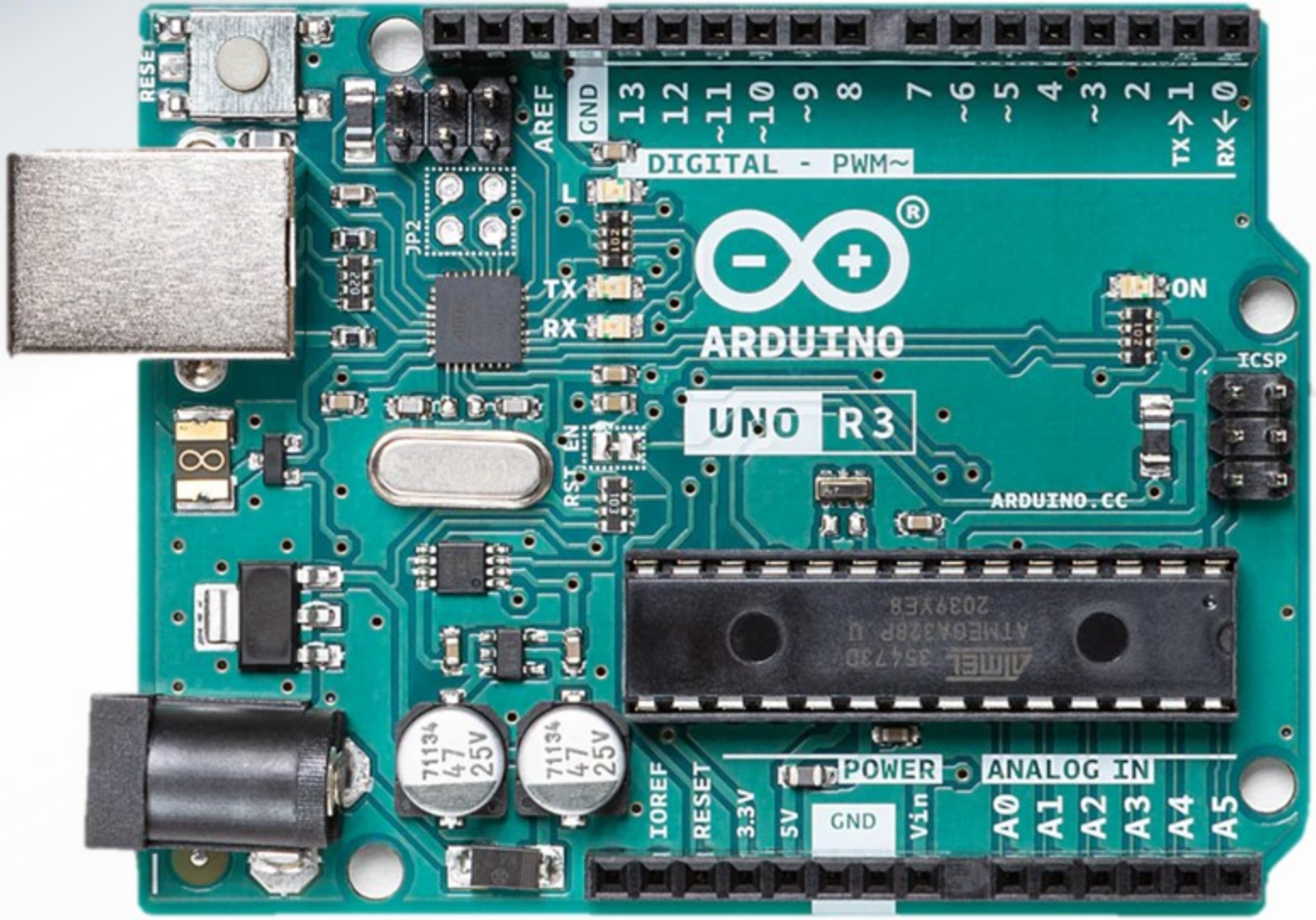

Keep Moving Forward

Arduino Nano

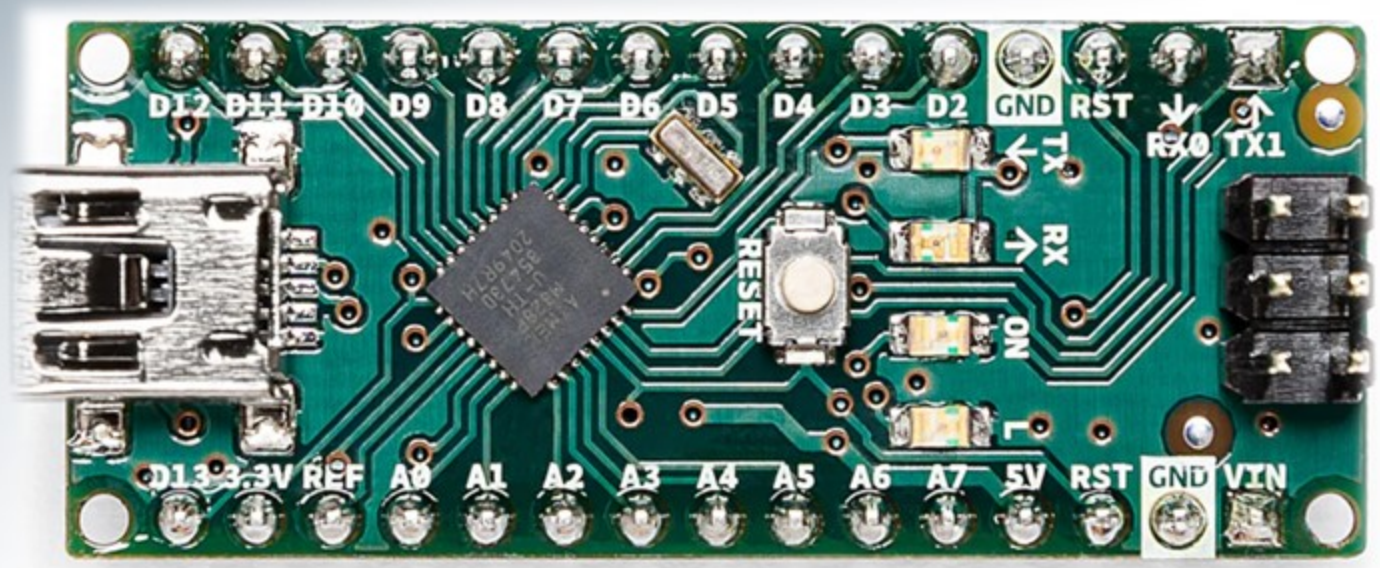

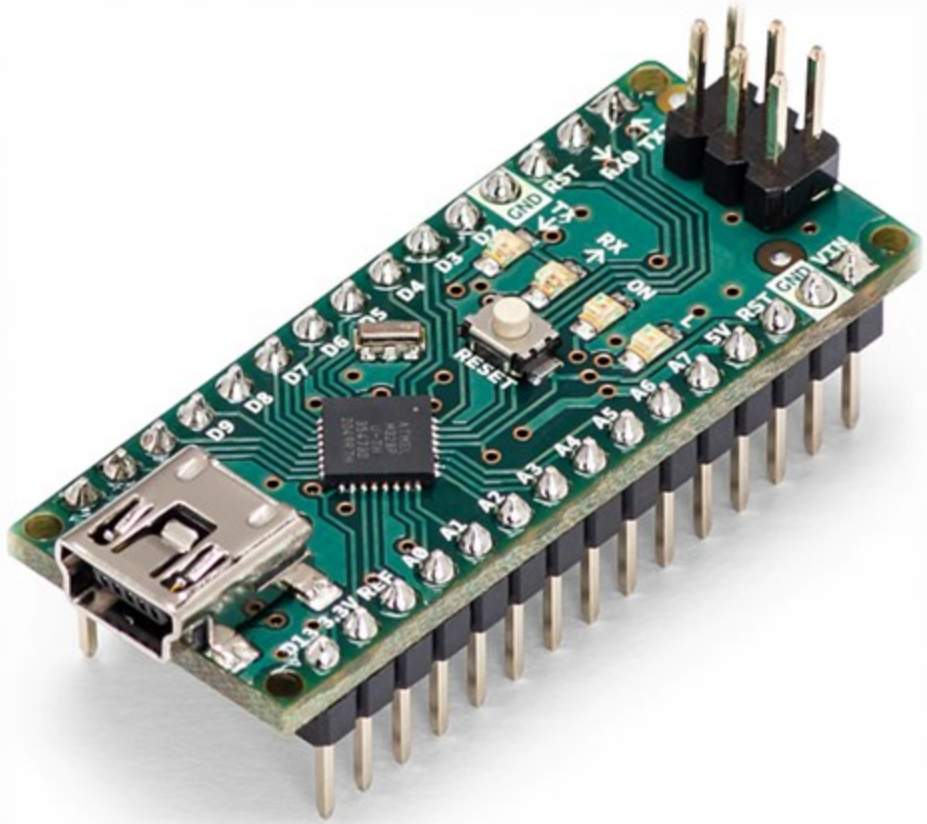

Arduino Micro

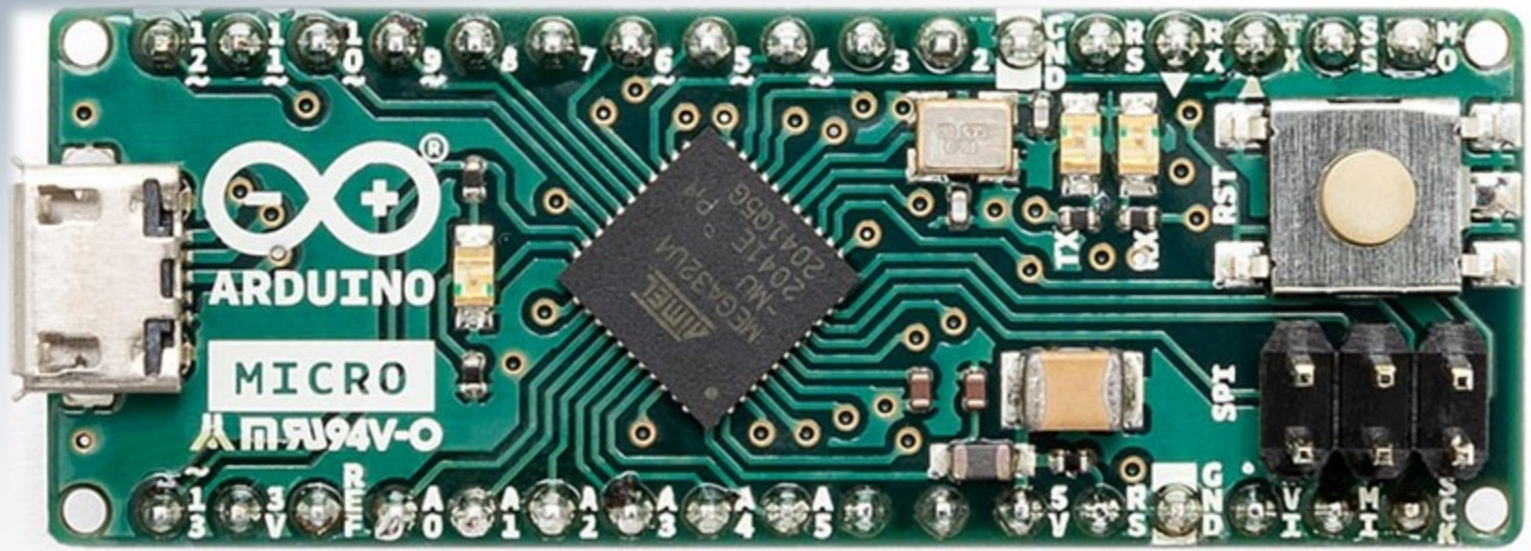

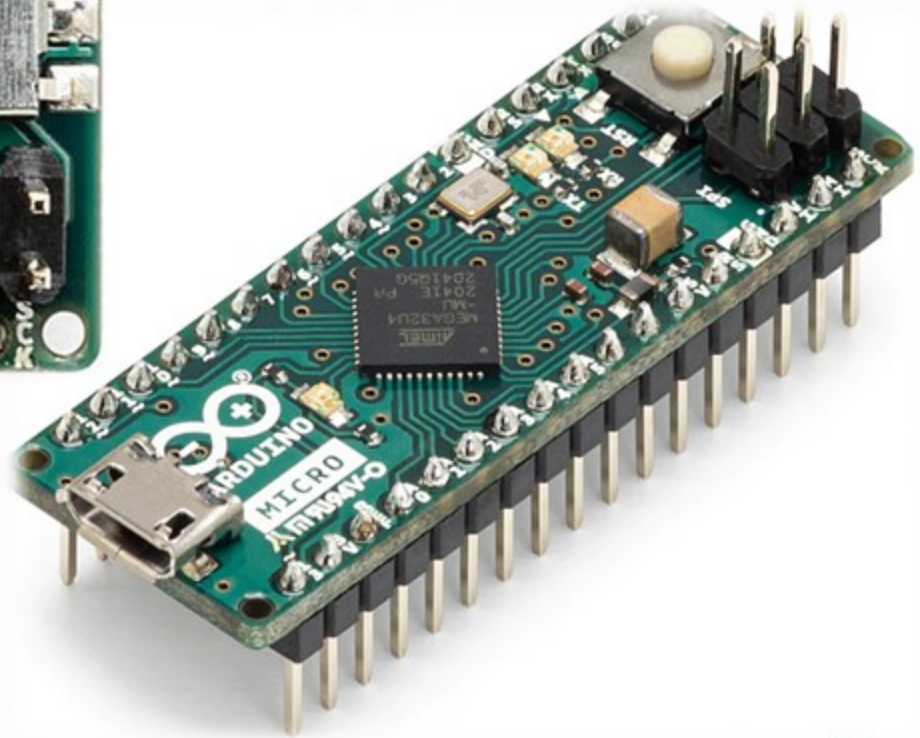

Arduino LEONARDO

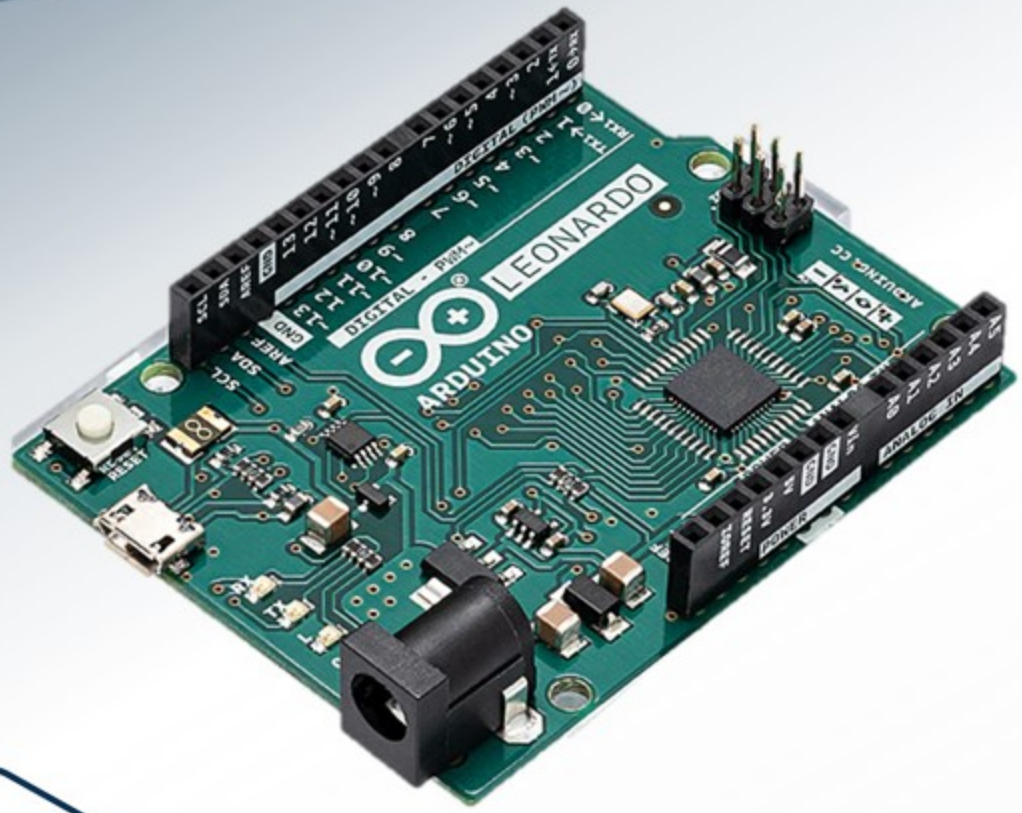

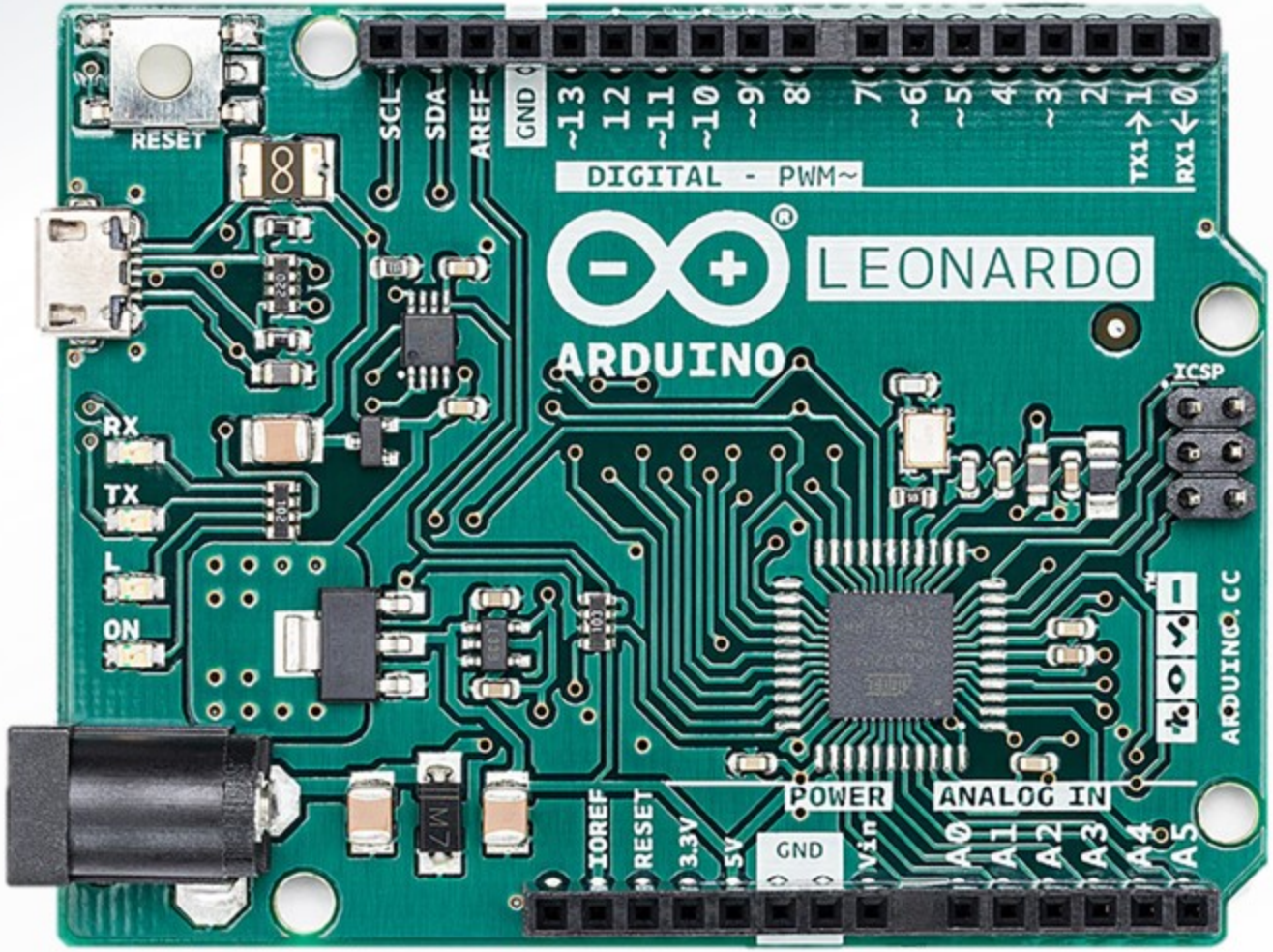

ADT

Keep Moving Forward

Arduino MEGA

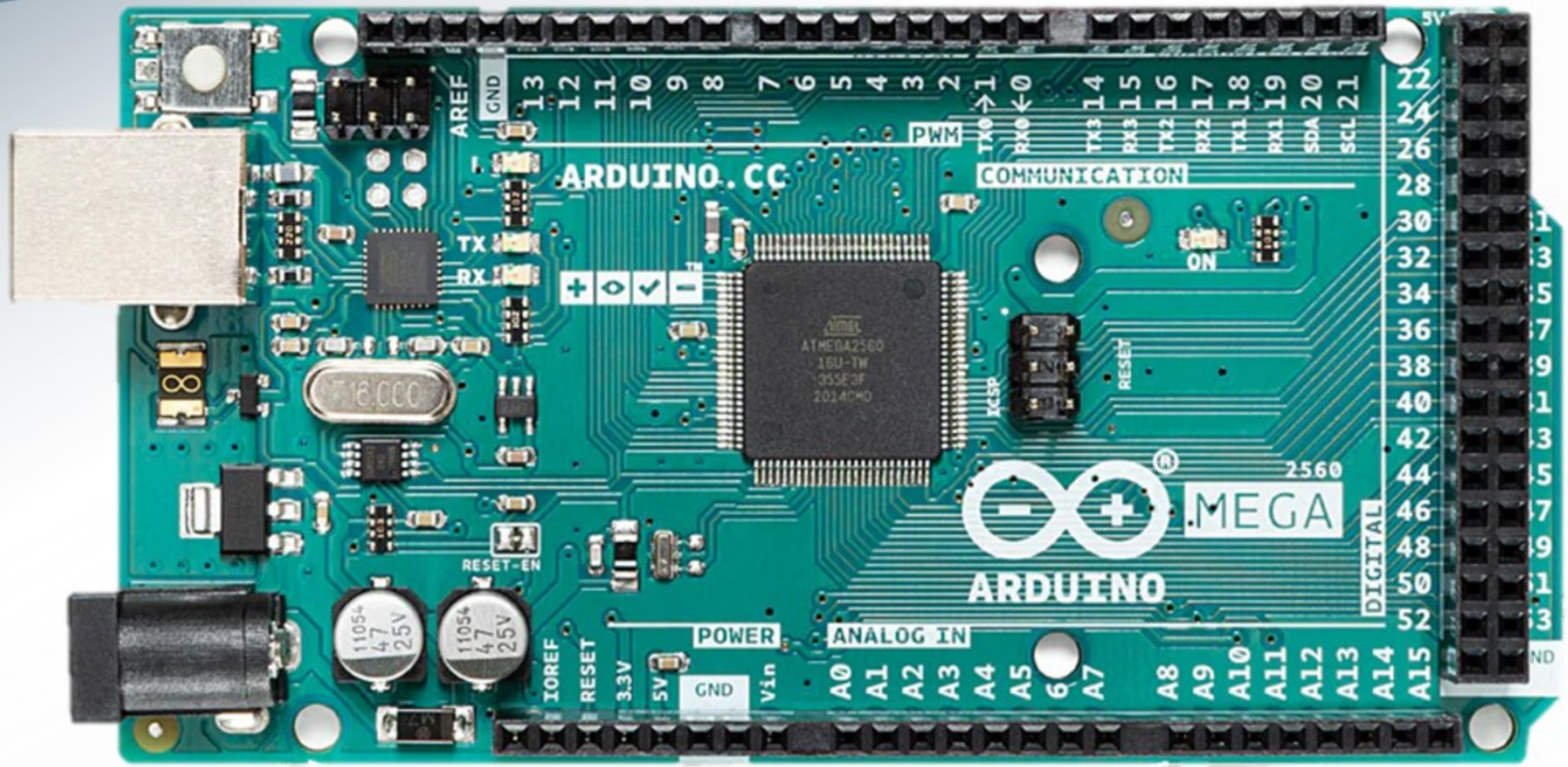

ADT

Keep Moving Forward

PCB: Printed Circuit Board

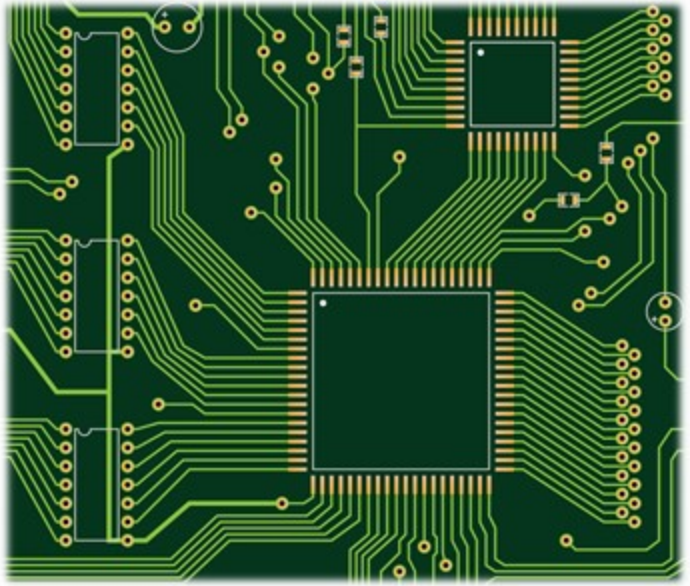

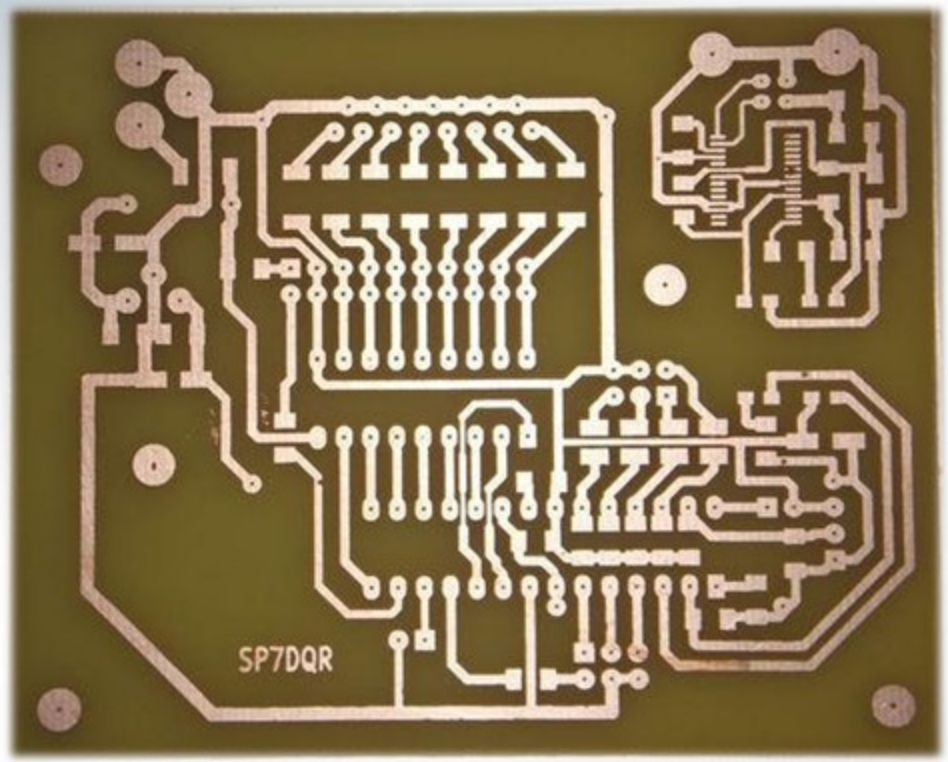

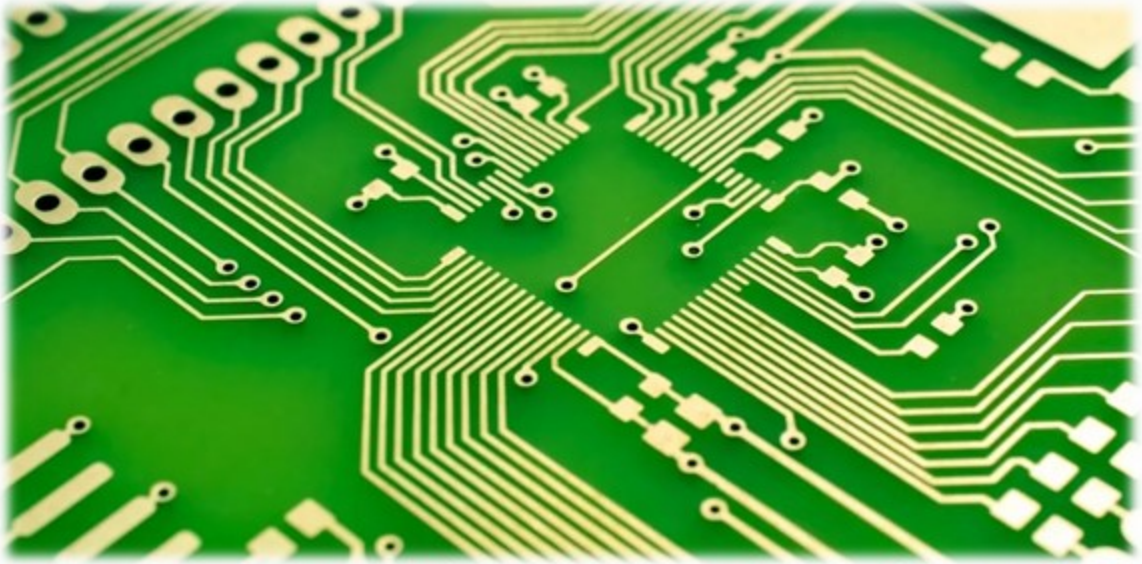

Arduino UNO Pins

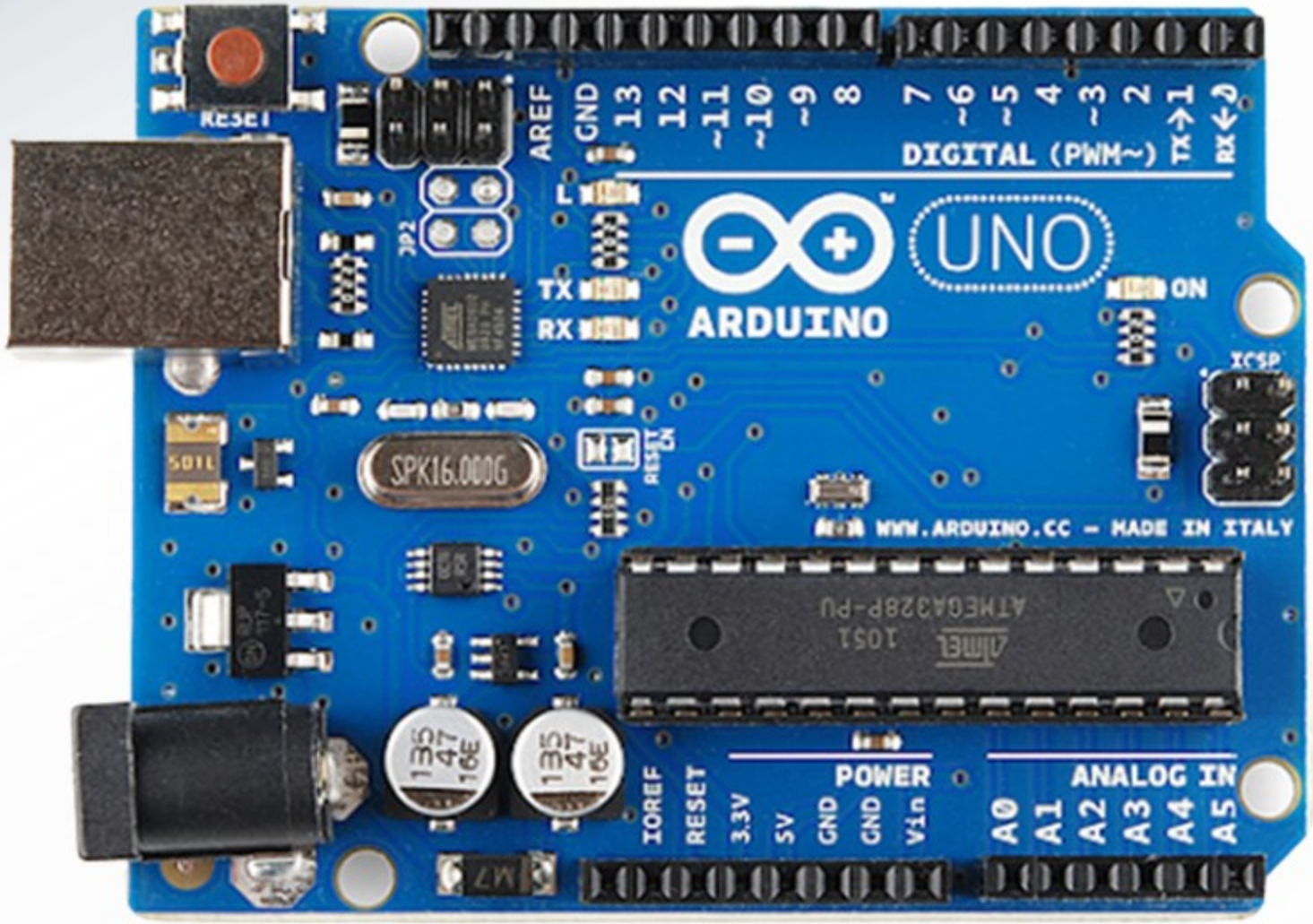

ADT

Keep Moving Forward

Arduino NANO Pins

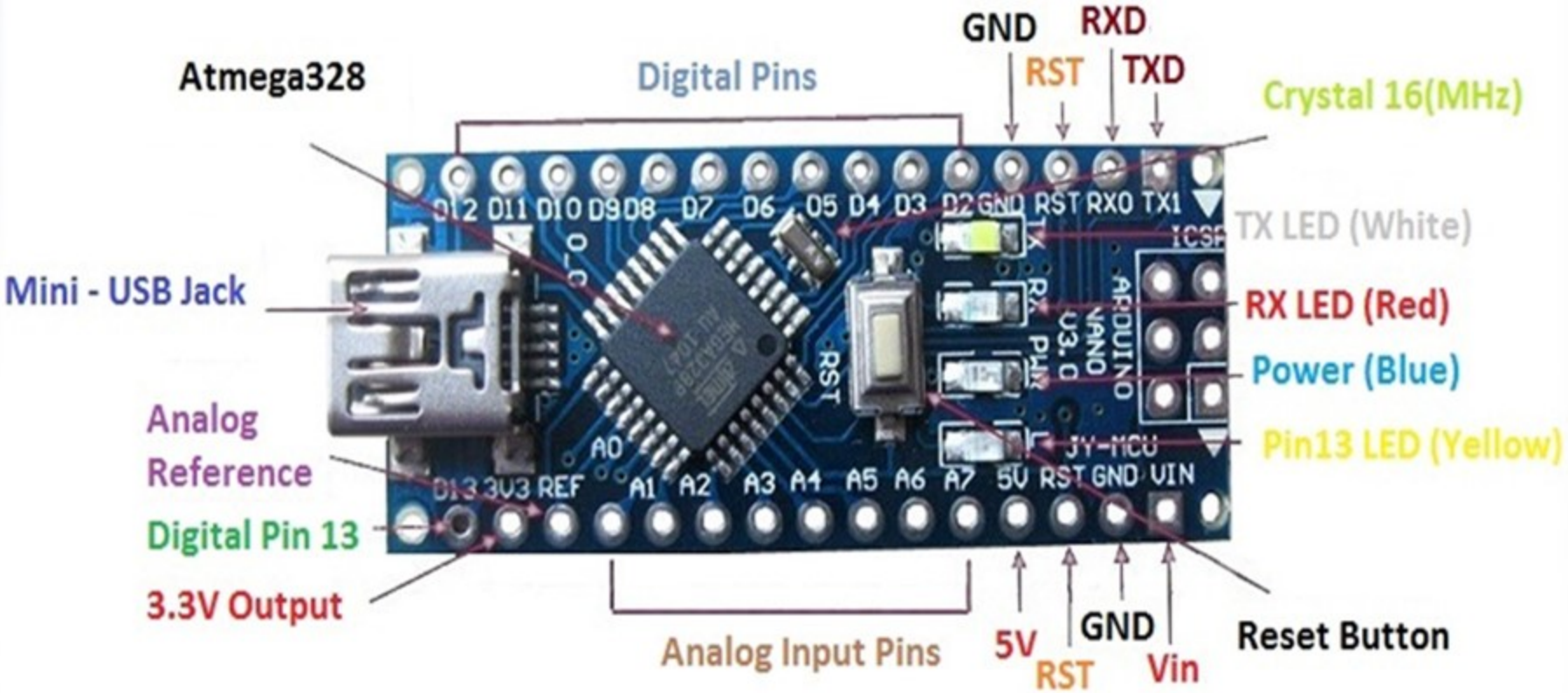

Arduino Nano

Breadboard & Components

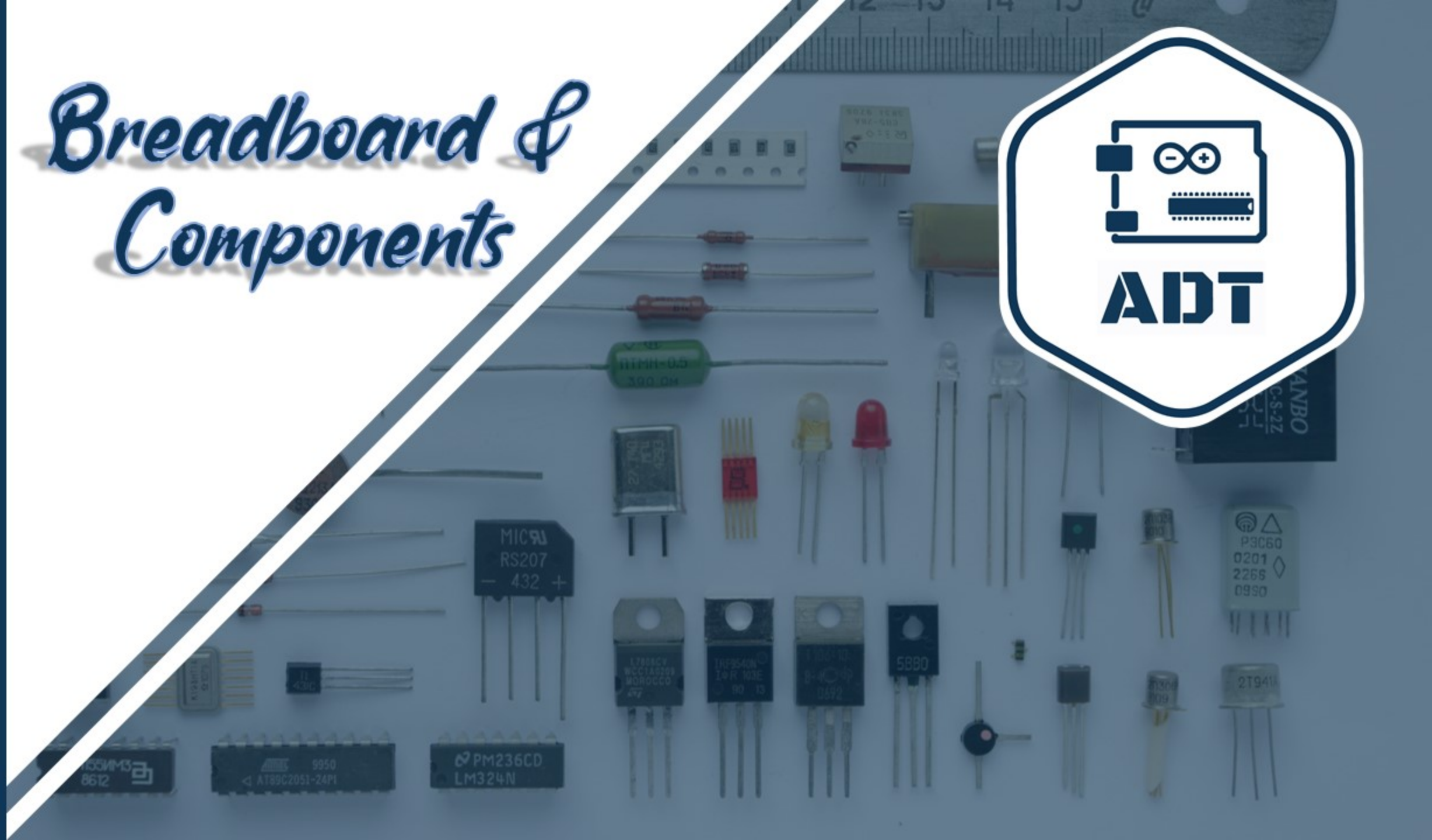

ADT

Components

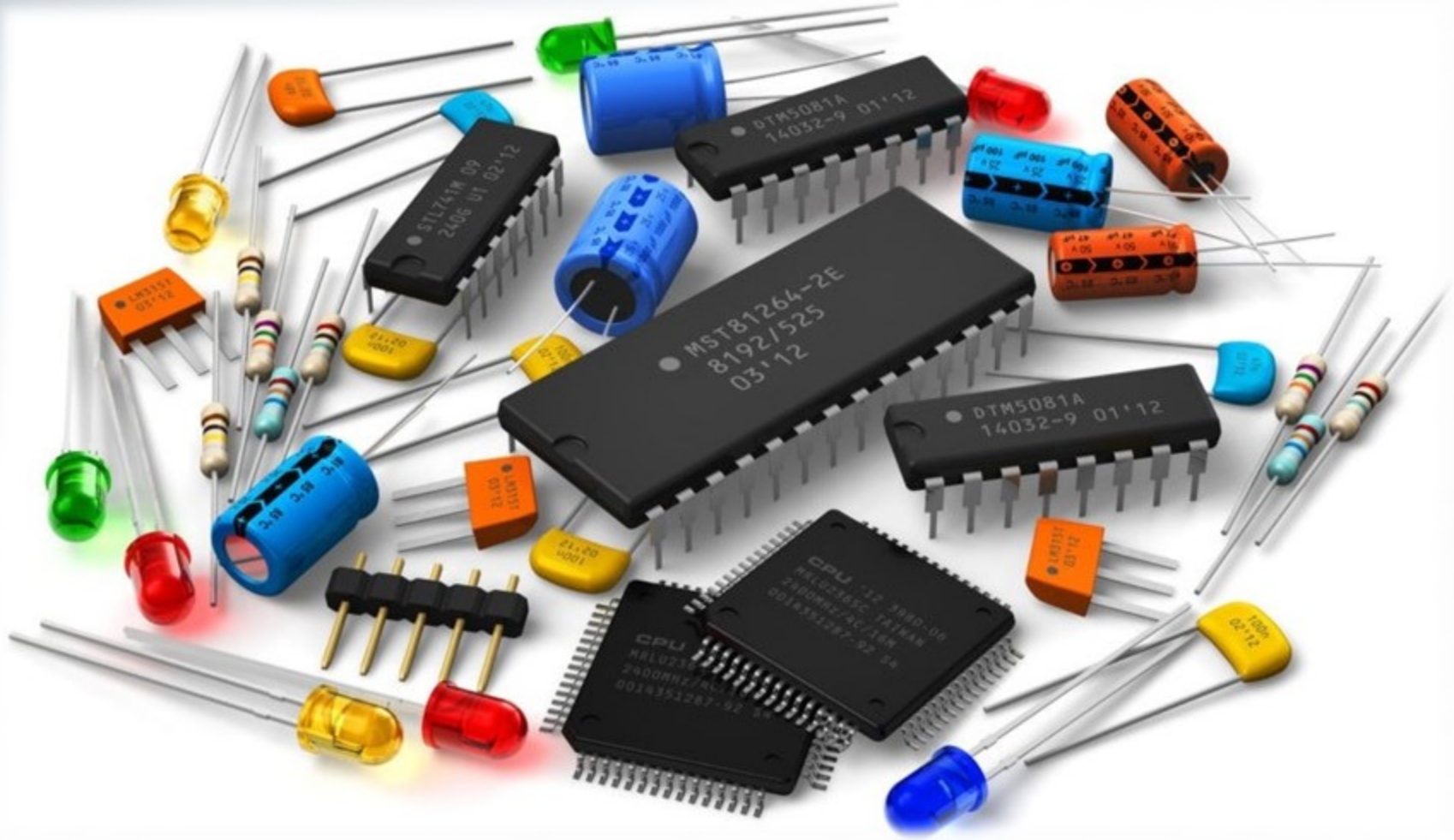
DTM5081A
14032-9 01'12
MST81264-2E
8192/525
03'12
DTM5081A
14032-9 01'12

Solderless breadboard

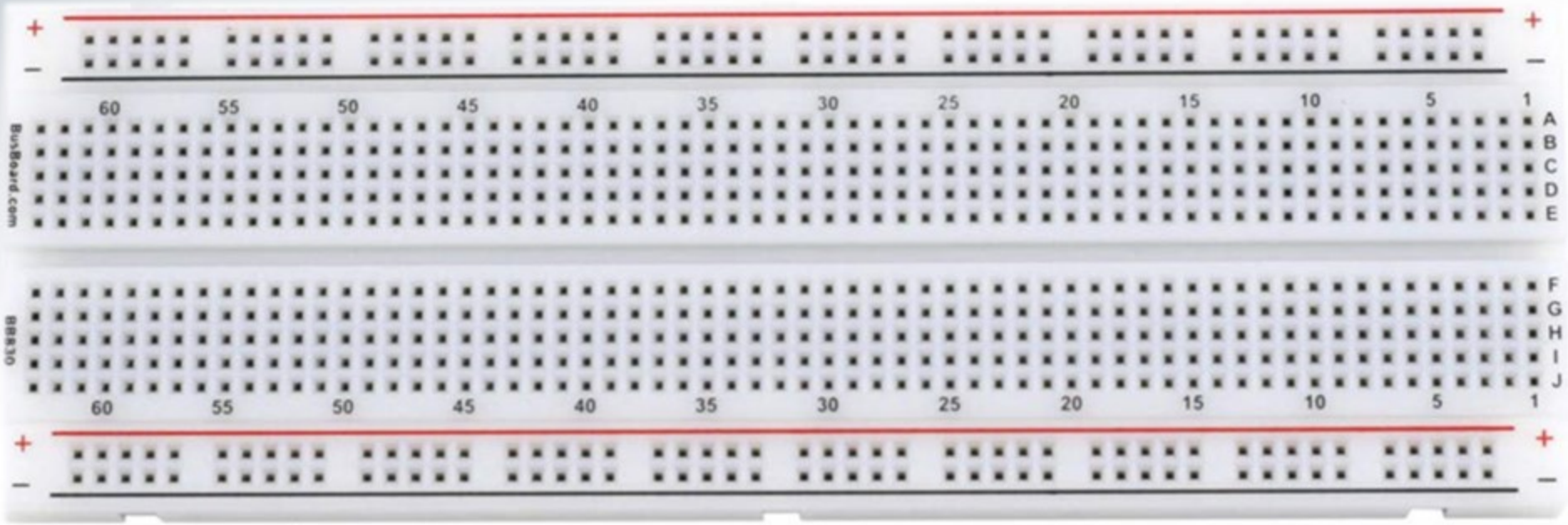

Keep Moving Forward

Solderless breadboard

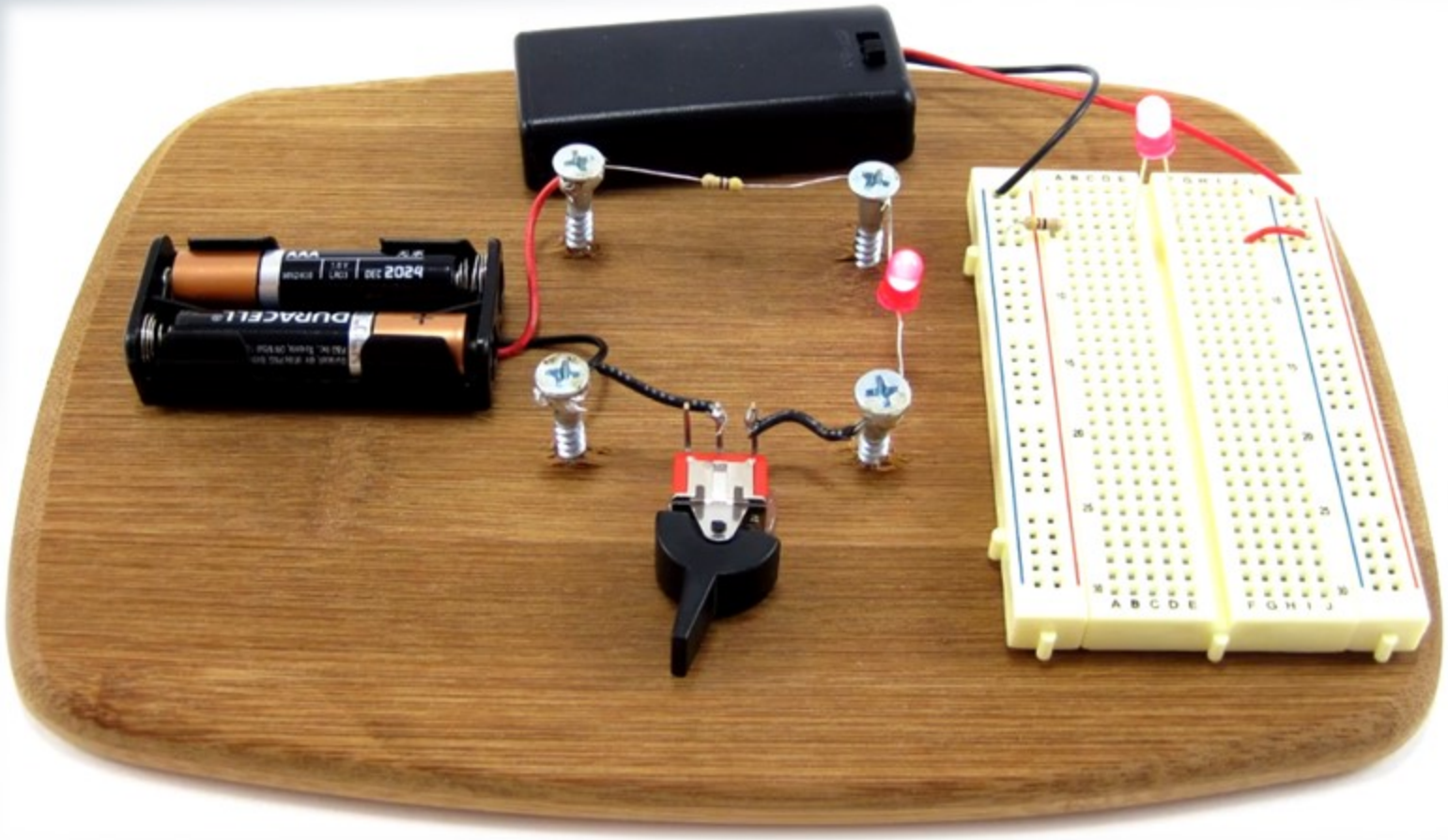

Solderless breadboard

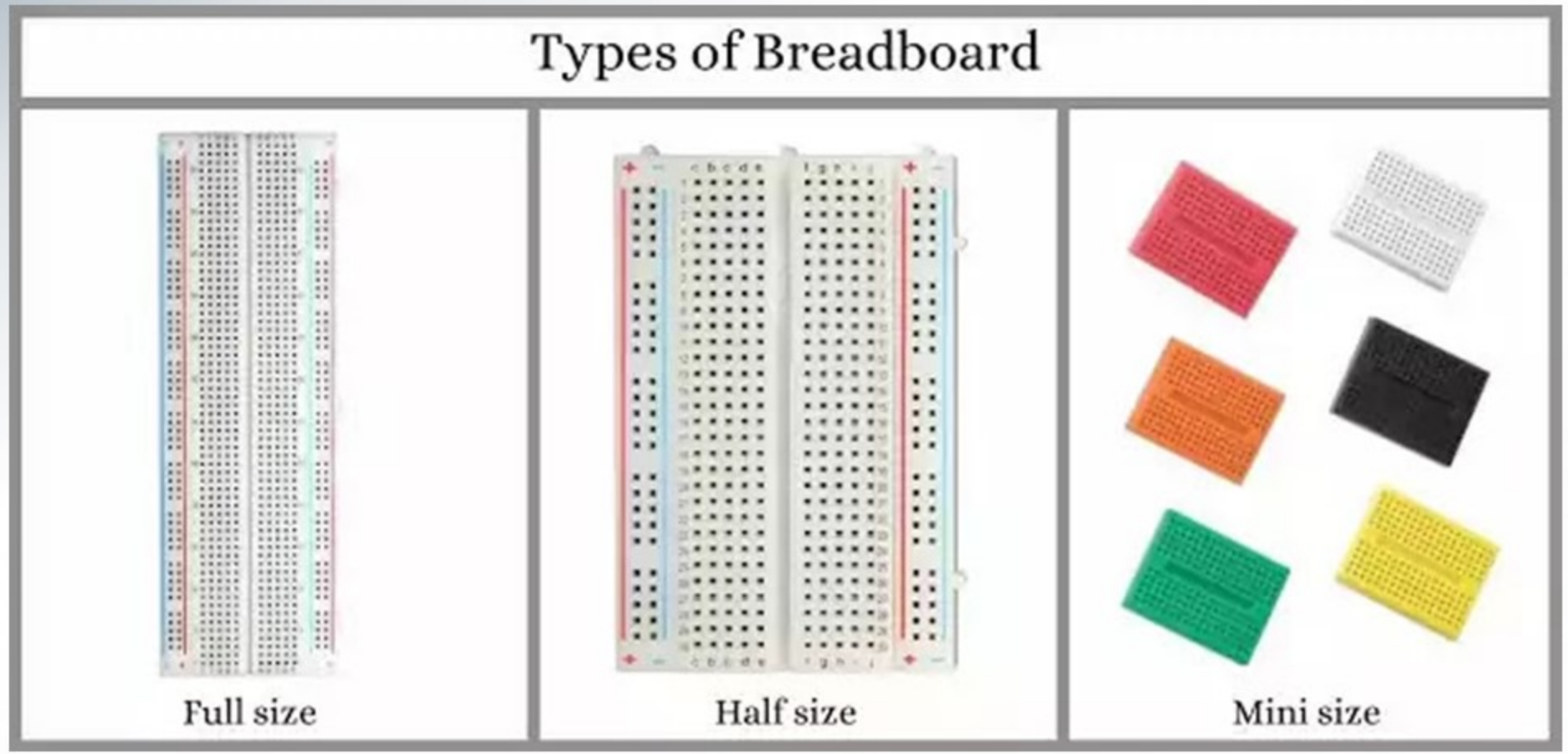

Solderless breadboard

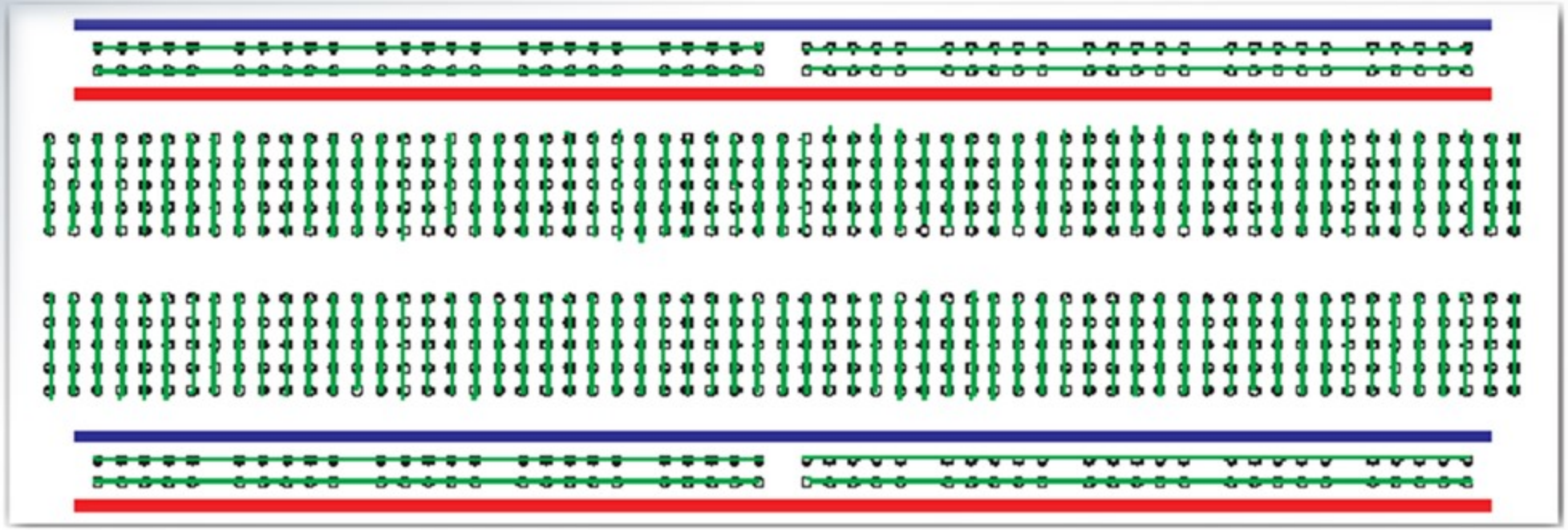

Solderless breadboard

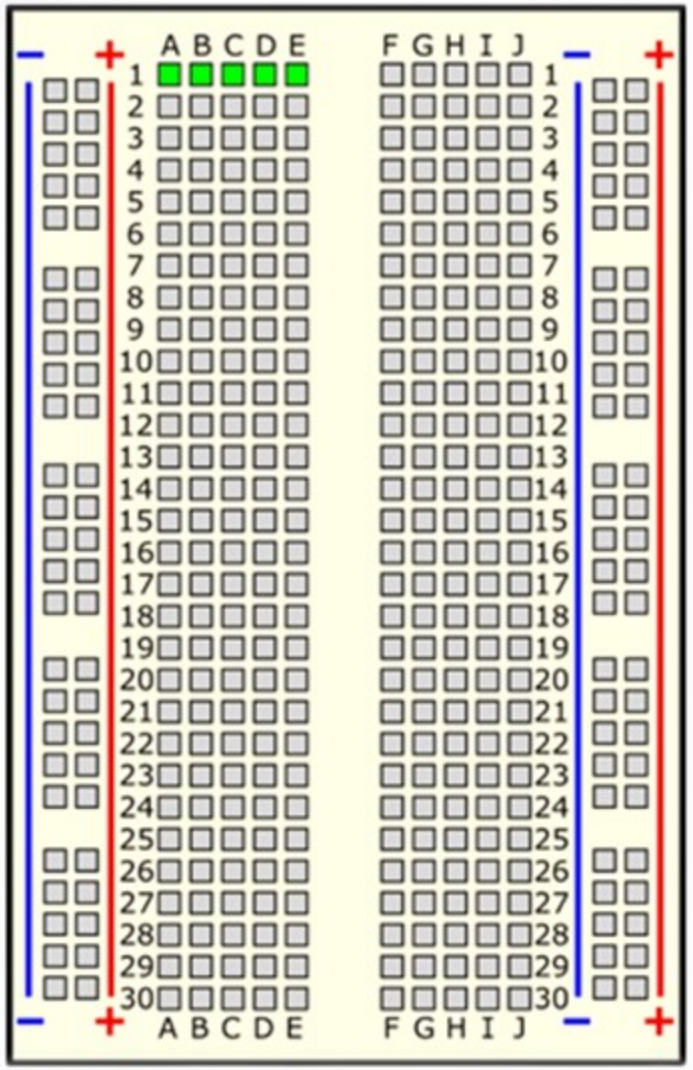

Solderless breadboard

Breadboard front	Uncover Breadboard back	Breadboard metal strip
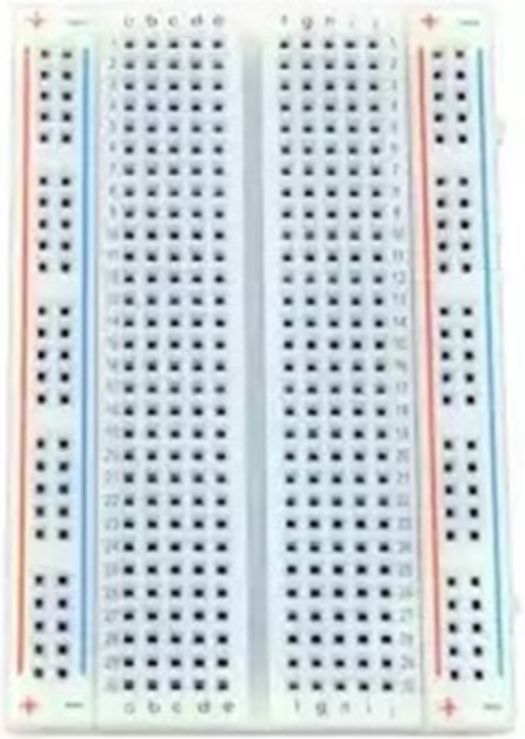		

Solderless breadboard

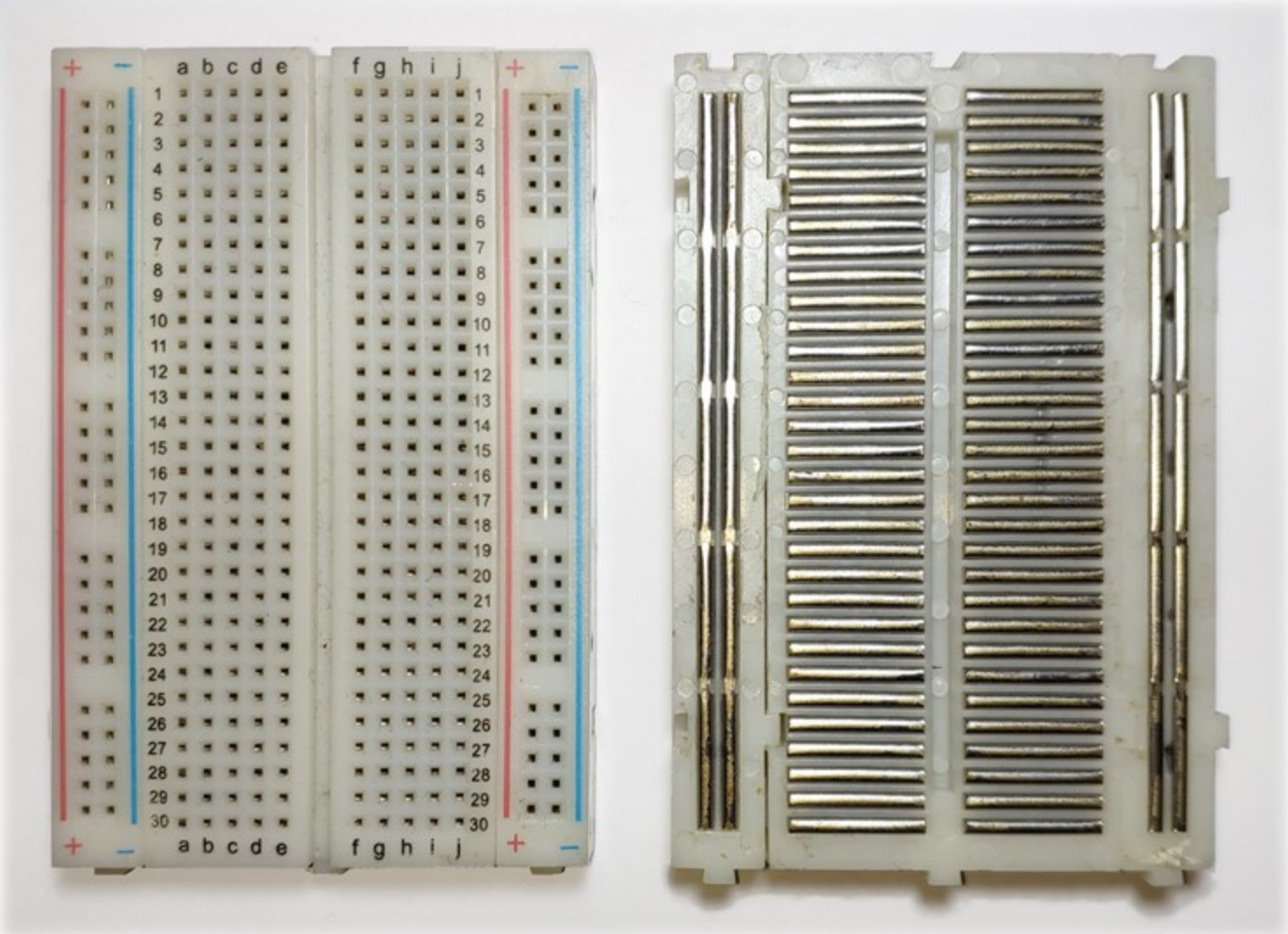

Solderless breadboard

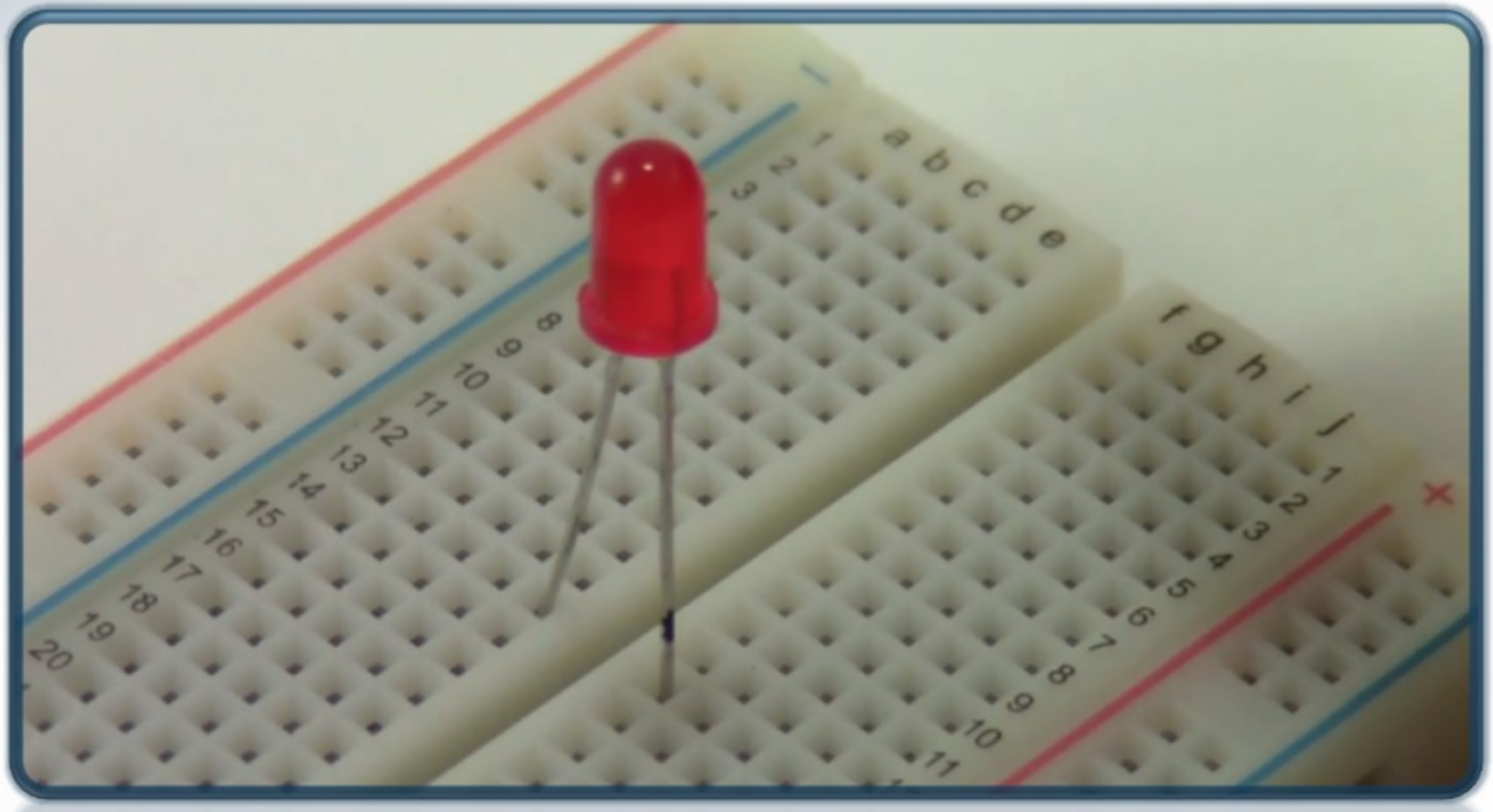

Solderless breadboard

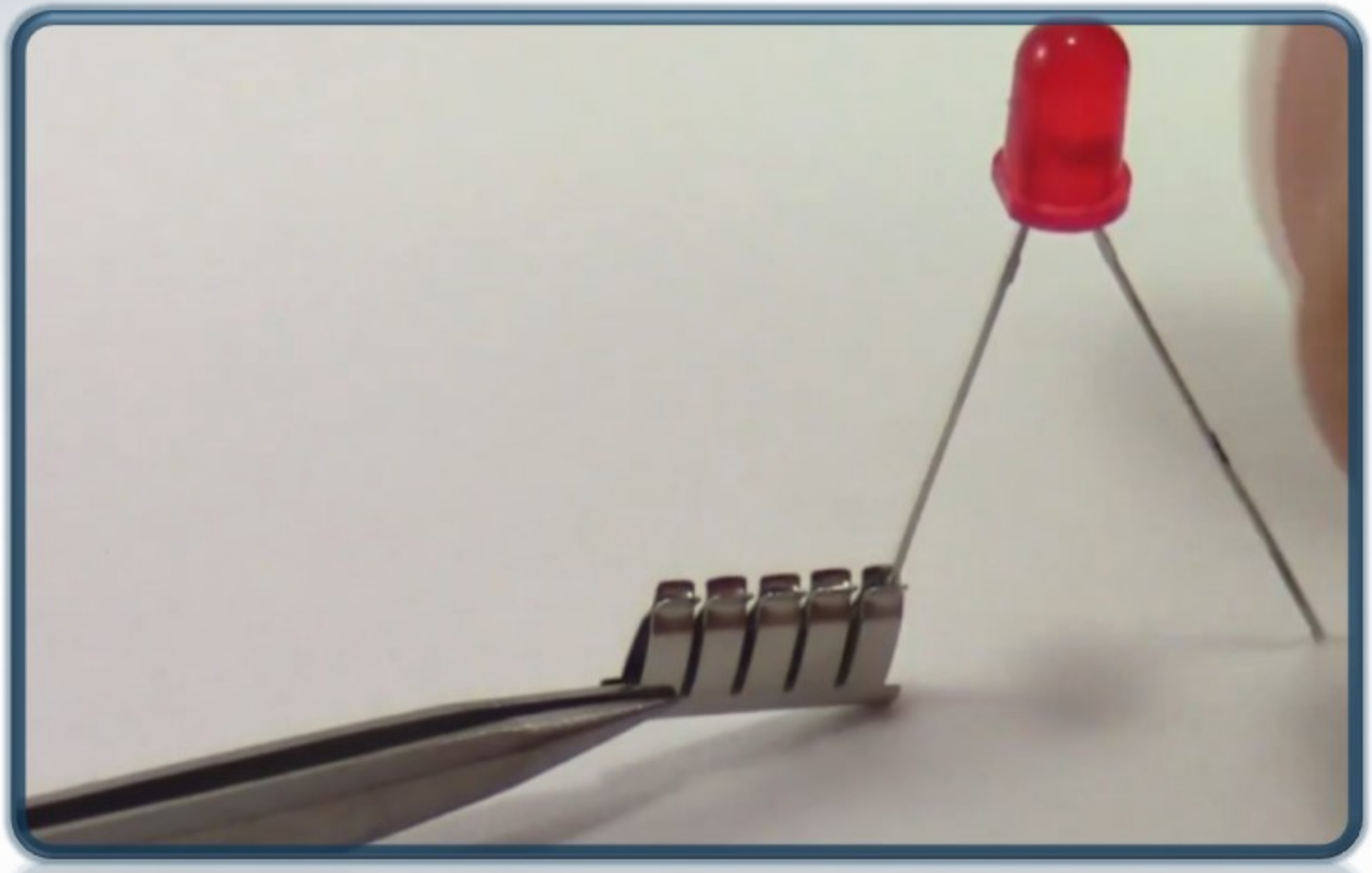

LEDs

(Light Emitting Diodes)

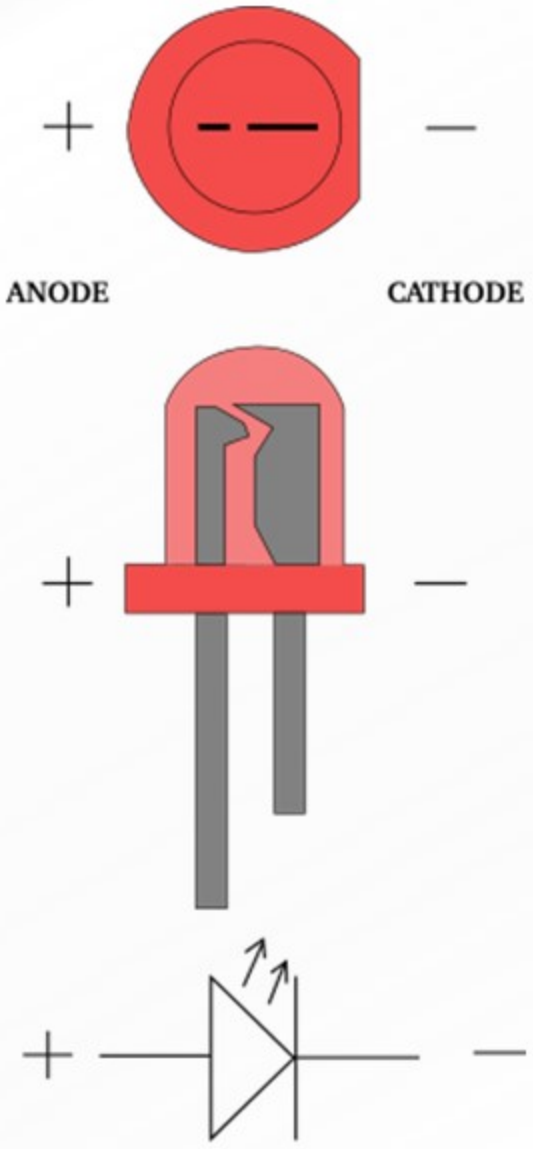

LEDs

Connection

Current limiting resistor

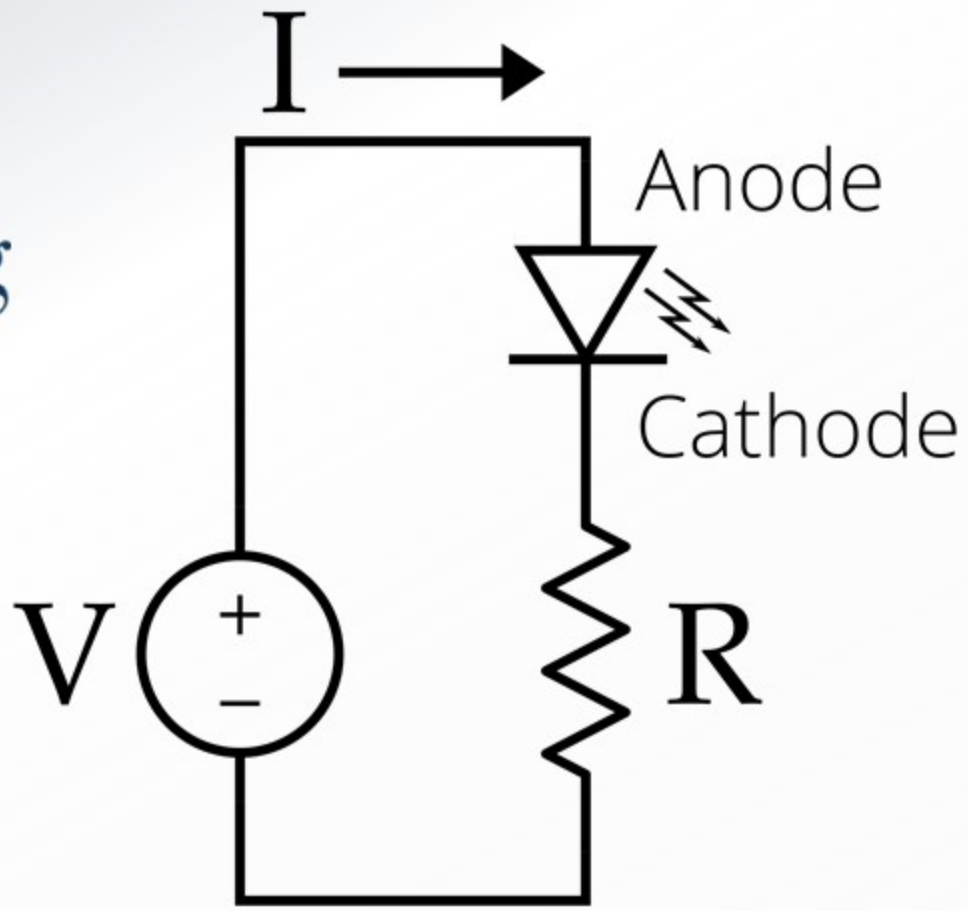

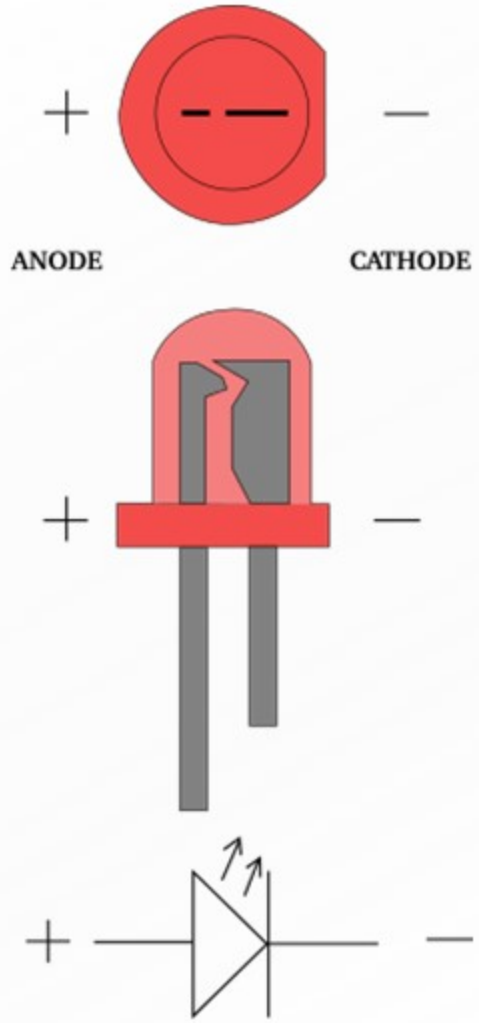

Resistance

Resistor

Resistor Symbol

Resistance

Reading resistor value

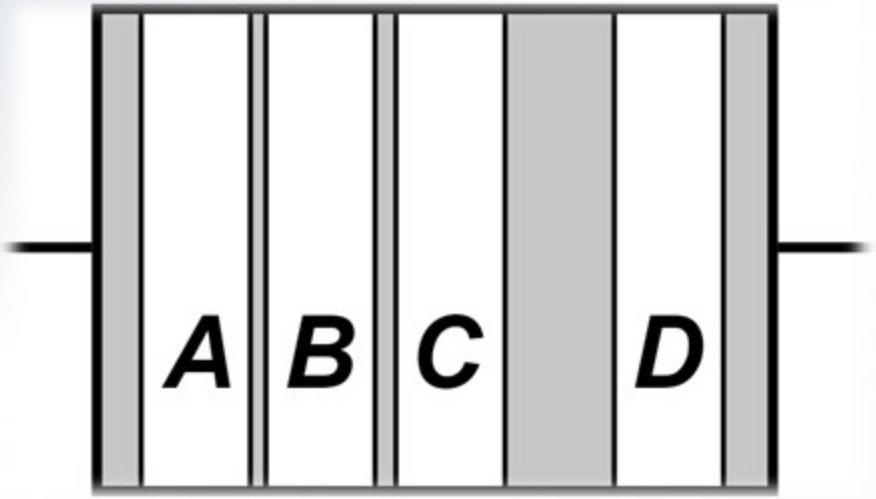

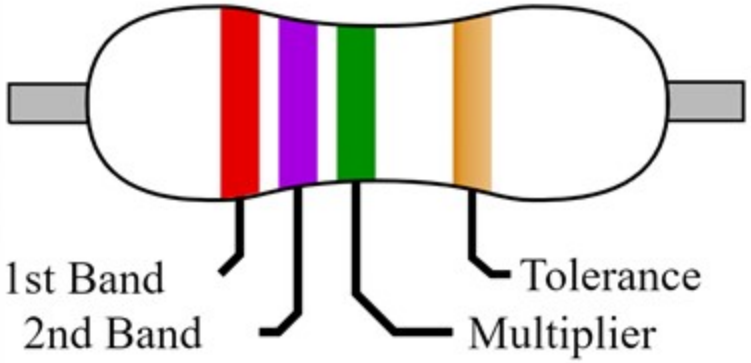

Resistance

Reading resistor value

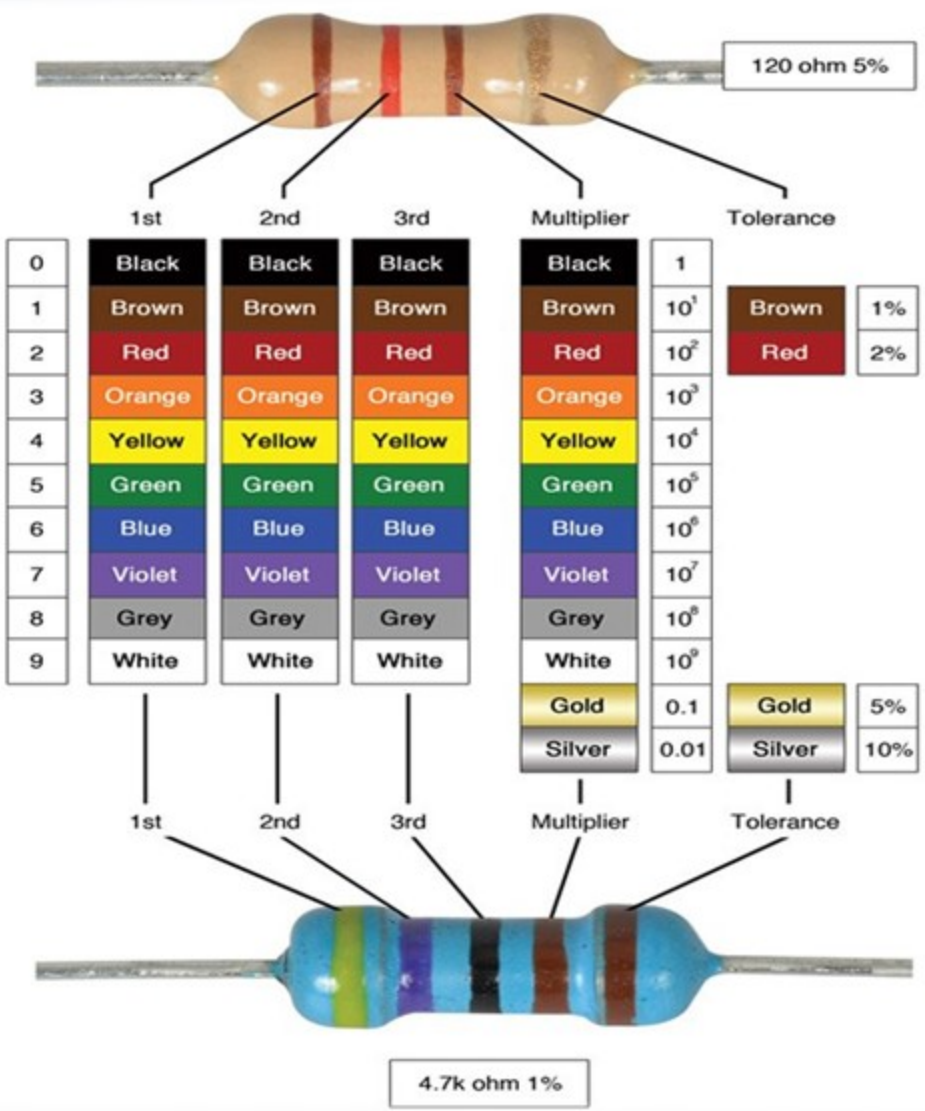

ADT

Keep Moving Forward

Resistance

Reading resistor value

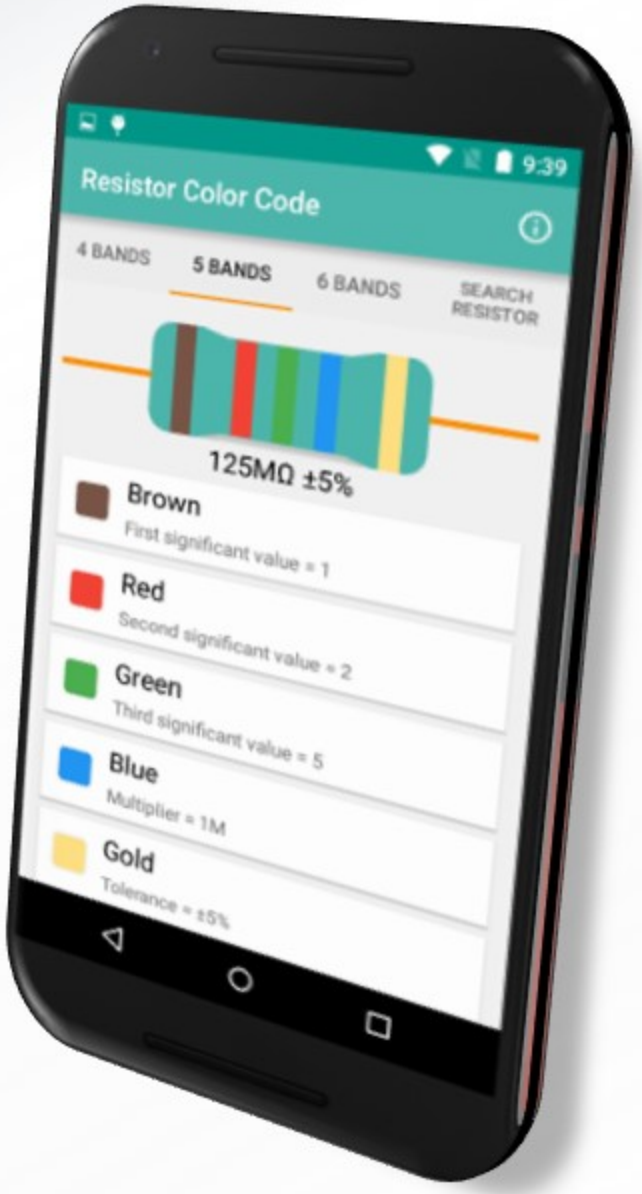

Capacitor

nichicon
35V 4700μF 35V 470
CAPACITOR

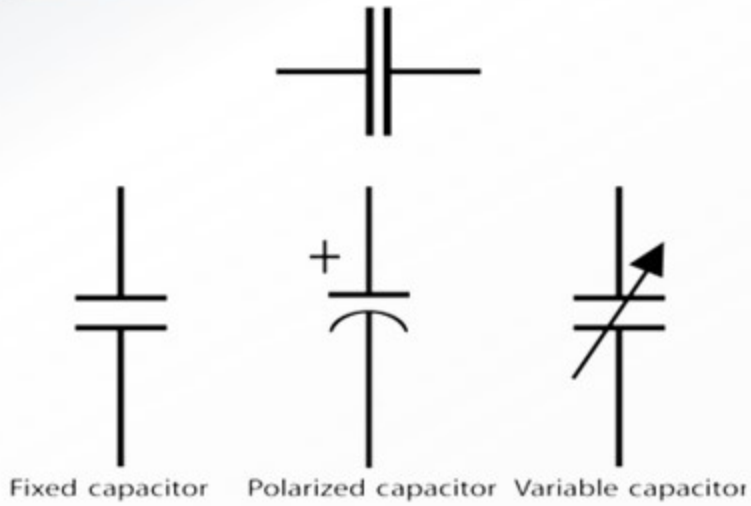
+
Fixed capacitor
Polarized capacitor
Variable capacitor

RXIN
RXIN

47 μF
450 V

109

Jumper Wires

Male to Male

Male to Female

Female to Female

Jumper Wires

Connection using Jumper Wires

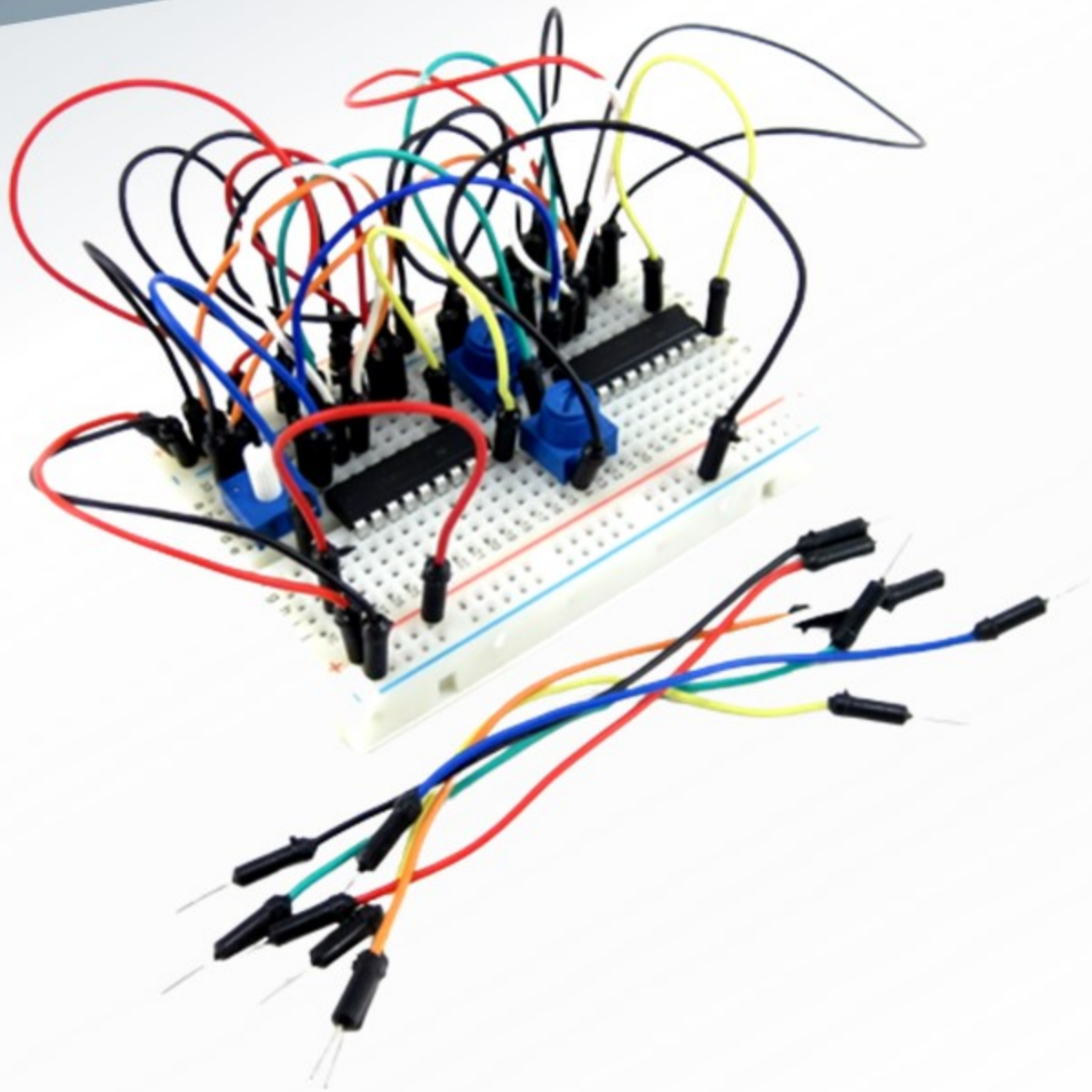

Jumper Wires

U-Shaped Jumper Wires Kit

Jumper Wires

Connection using U-Shaped Jumper Wires Kit

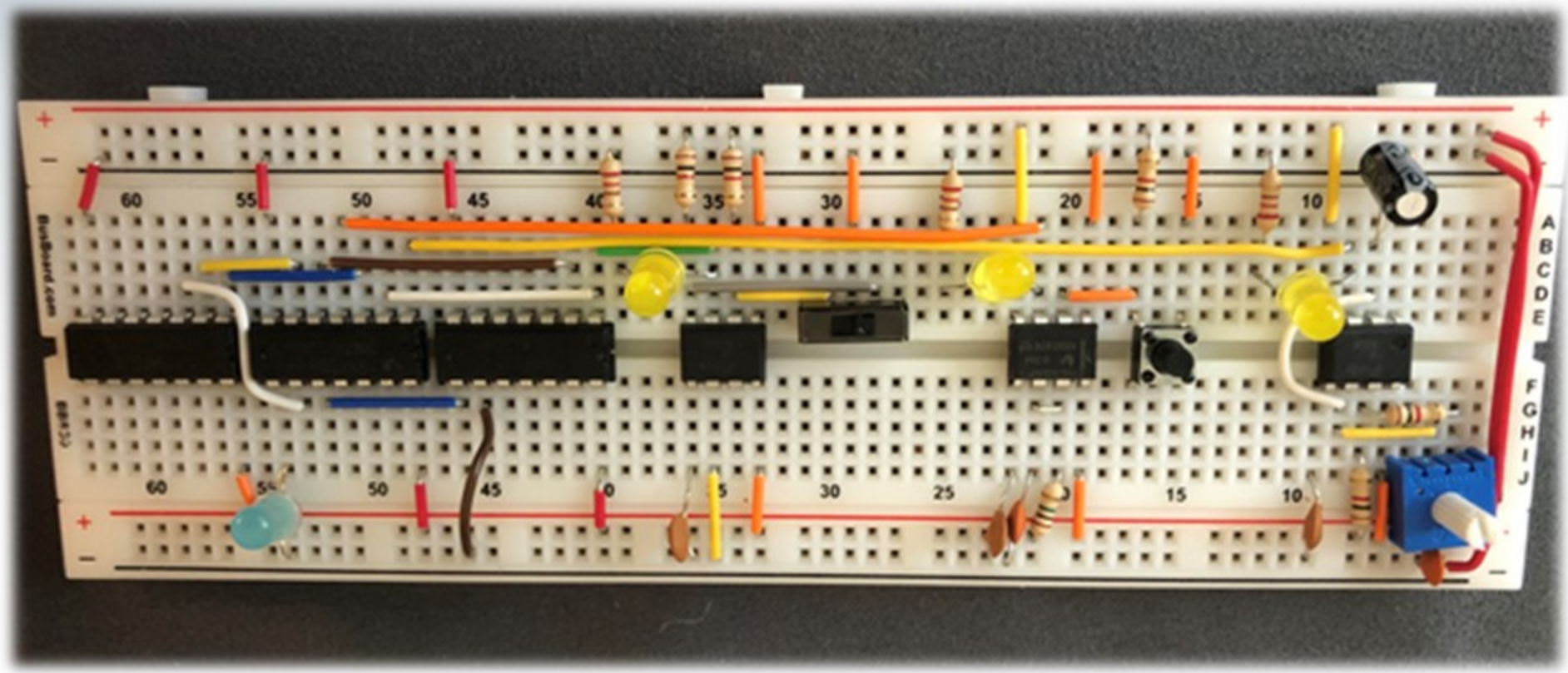

Jumper Wires

Connection using U-Shaped Jumper Wires Kit

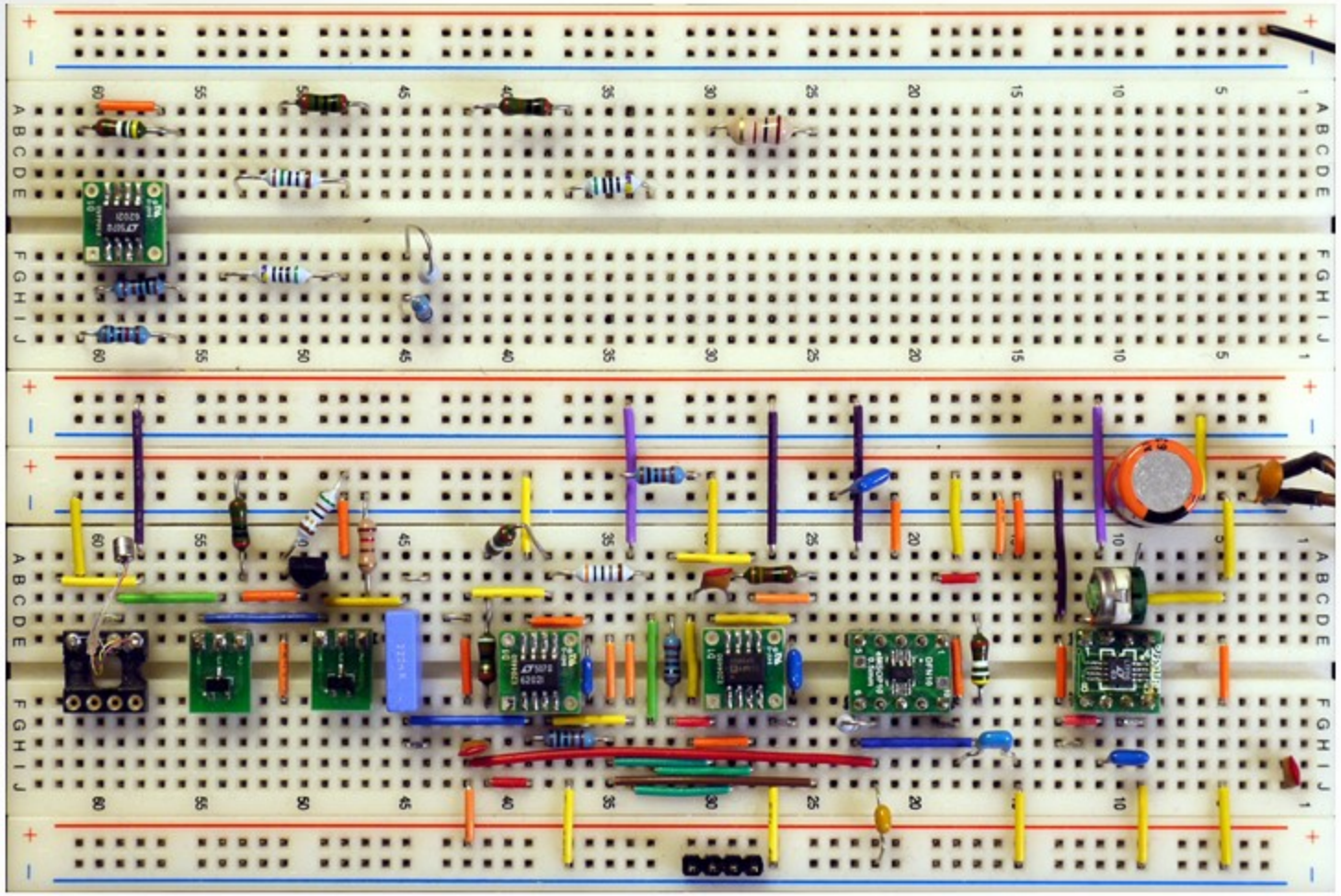

Jumper Wires

Wire Wrapping

Jumper Wires

Connection using Wire Wrapping

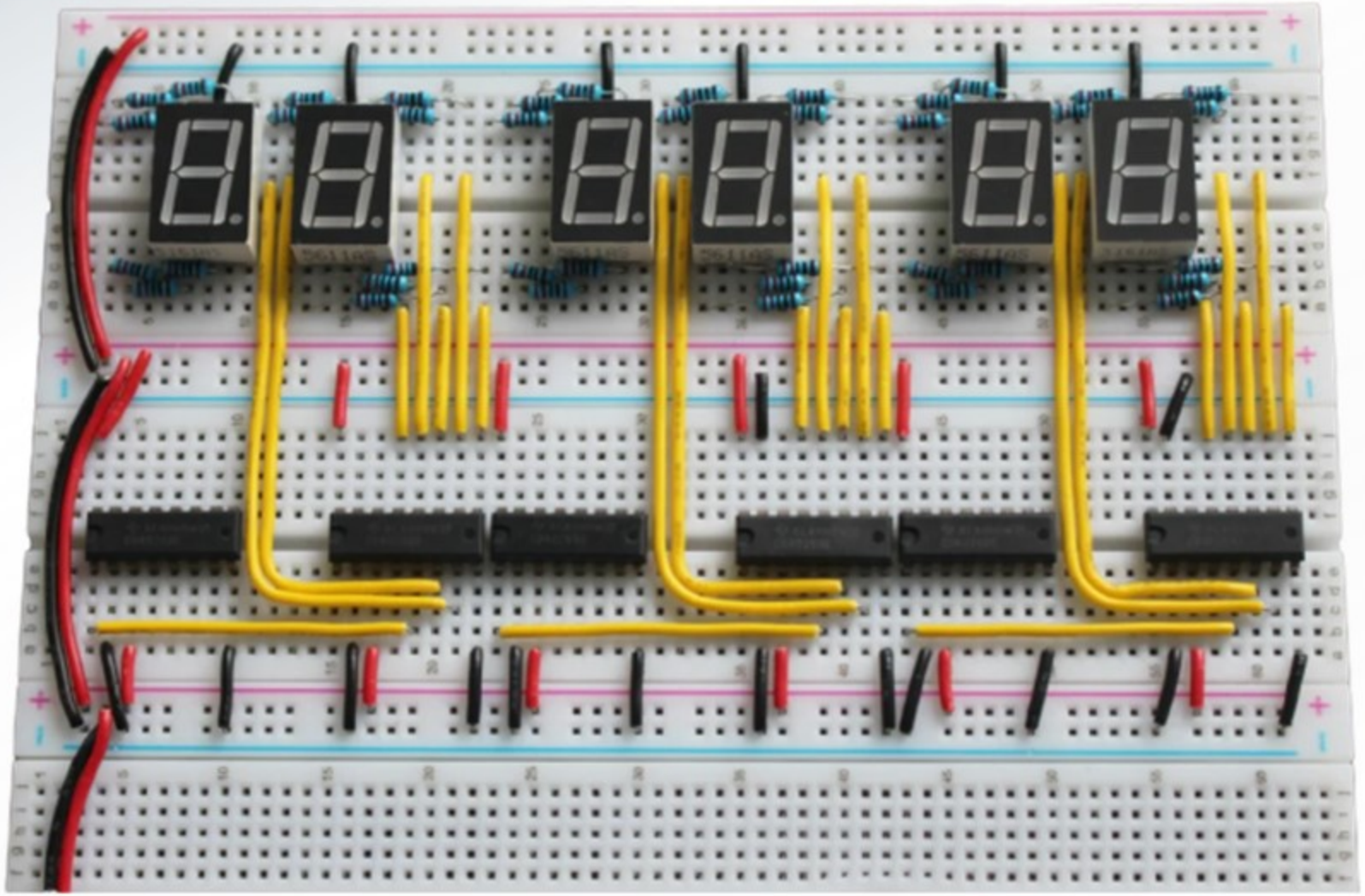

Power Supply

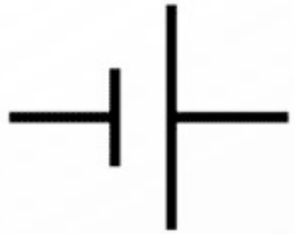

9V Battery

Power Supply

Rechargeable 9V Battery

Power Supply

Modern problems require modern solution ;)

Note: check the USB wire color code

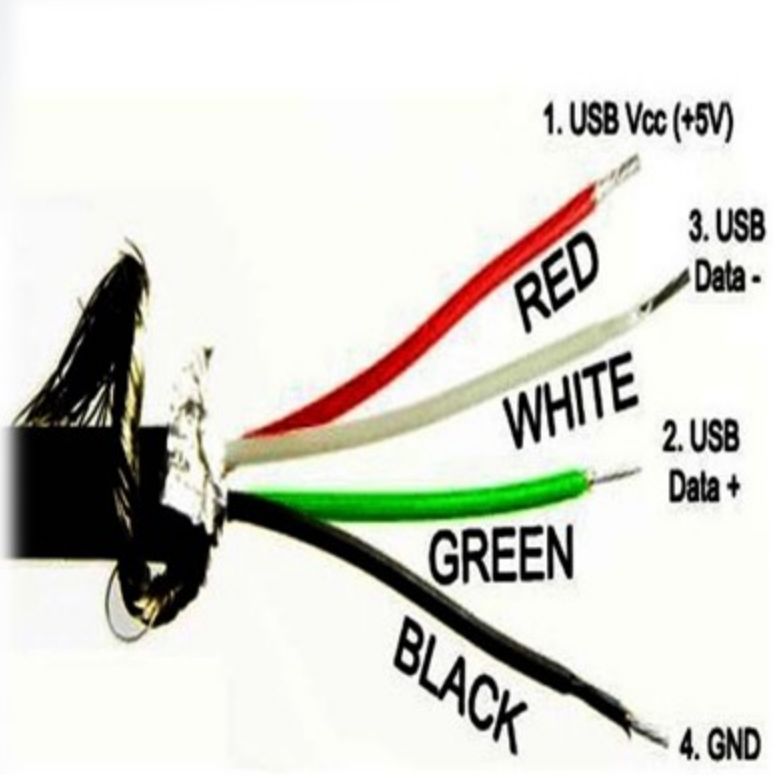

ICs

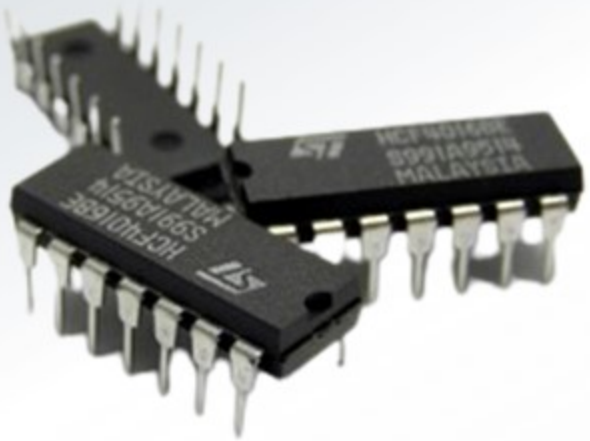

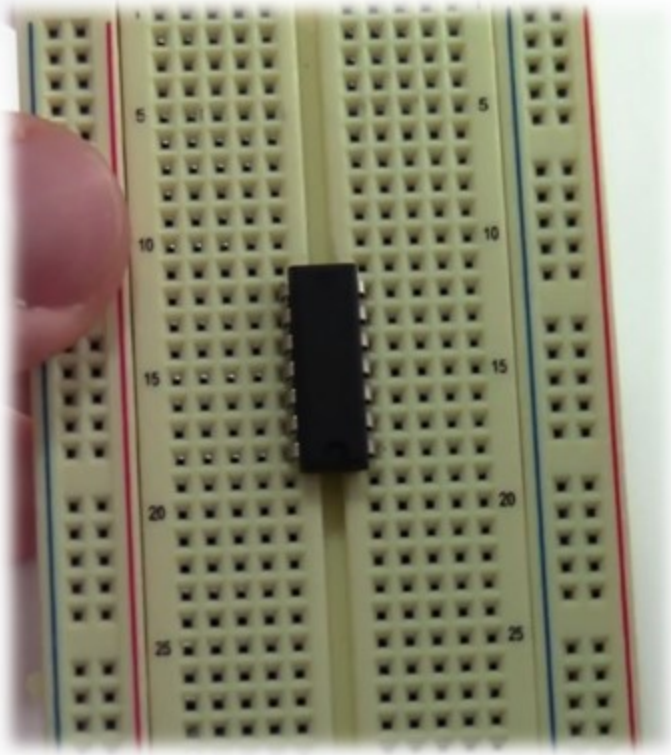

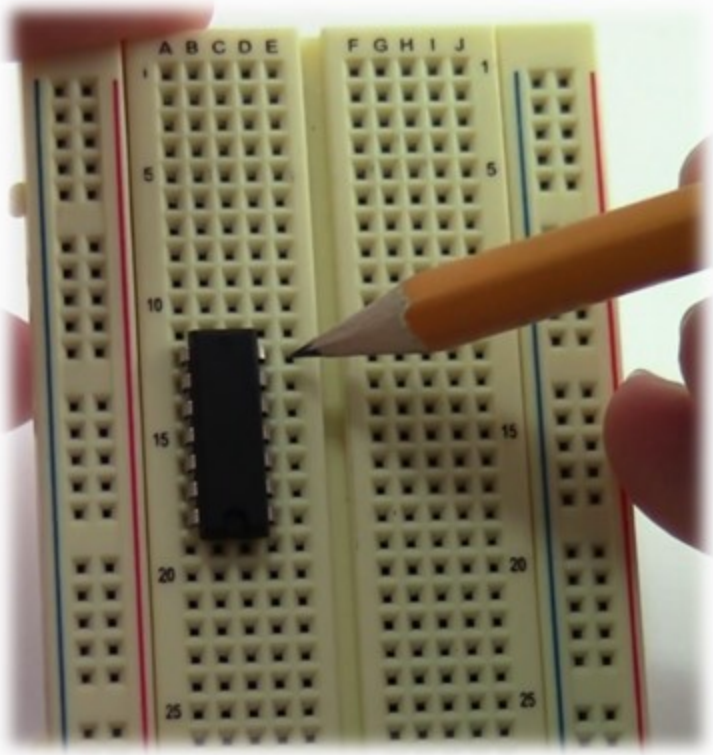

Solderless breadboard

(Power Rails)

Full Power Rails

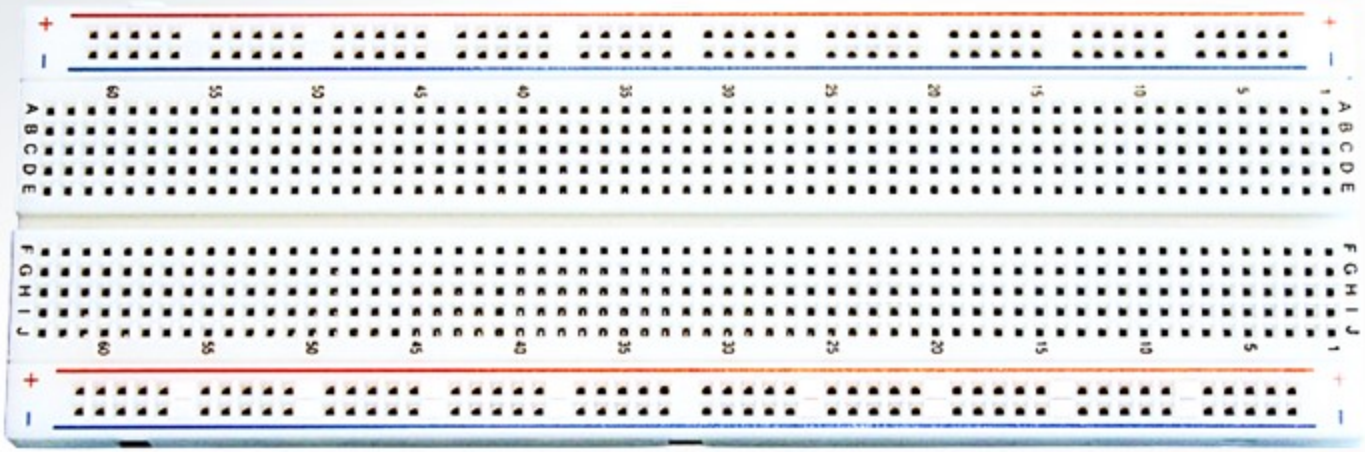

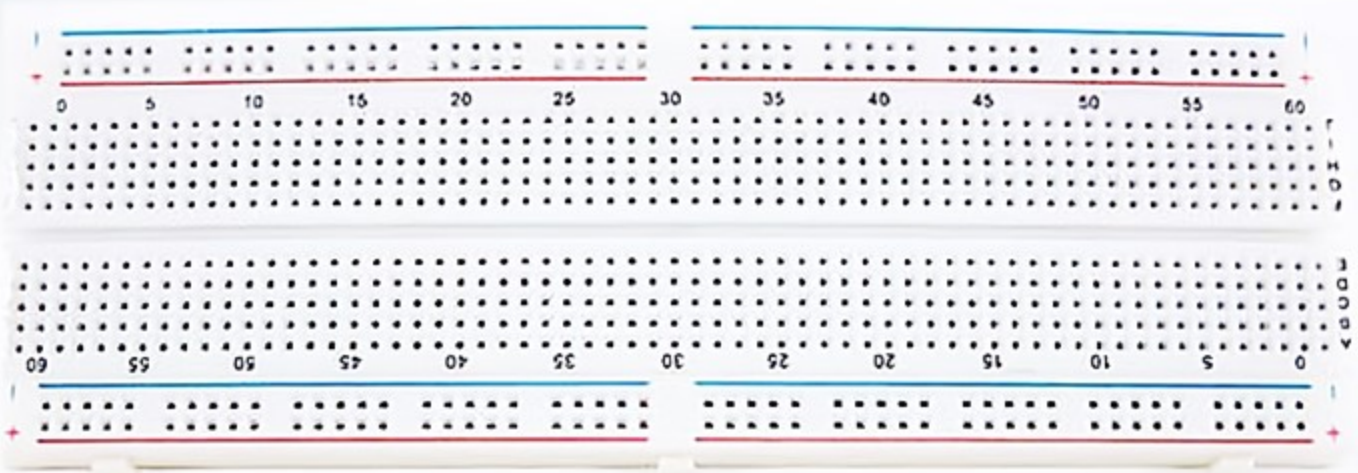

Split Power Rails

Solderless breadboard

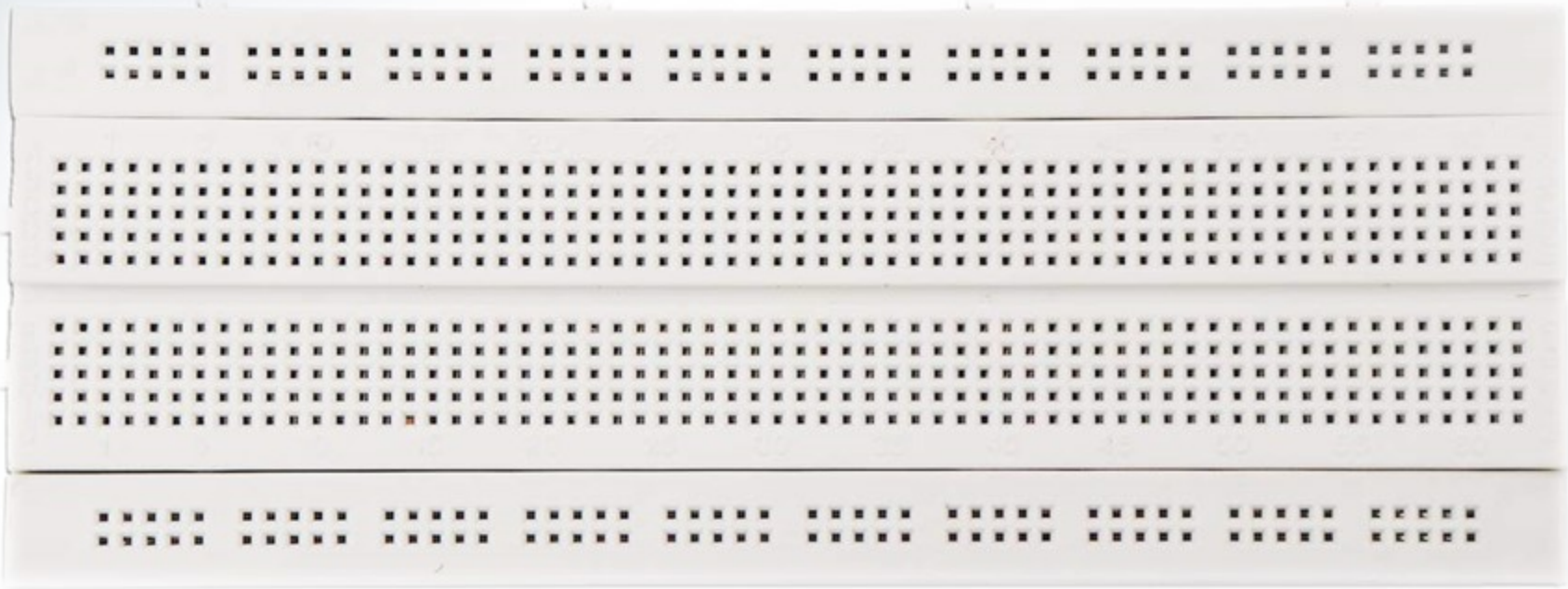

Connection

Connection

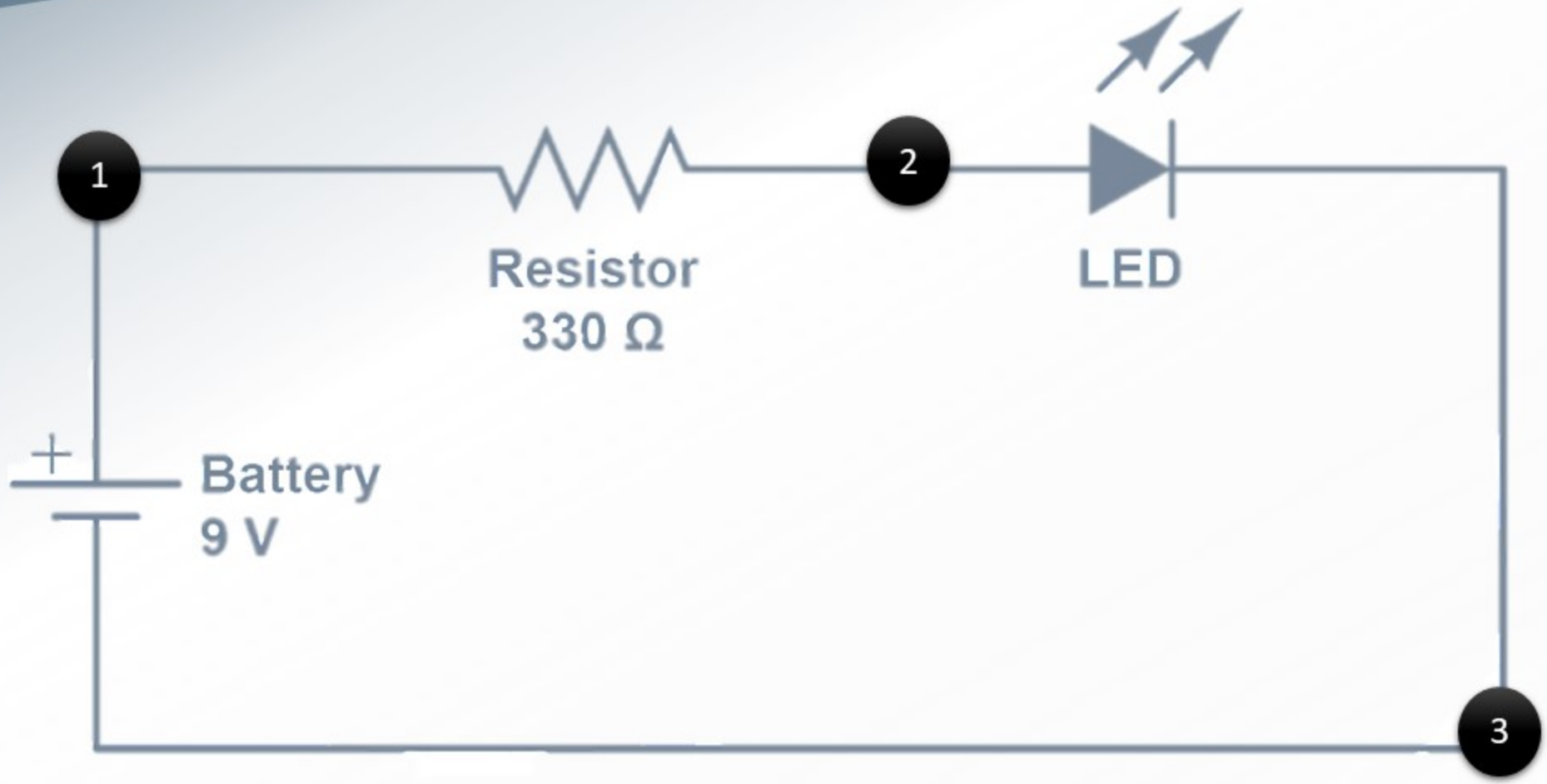

Connection

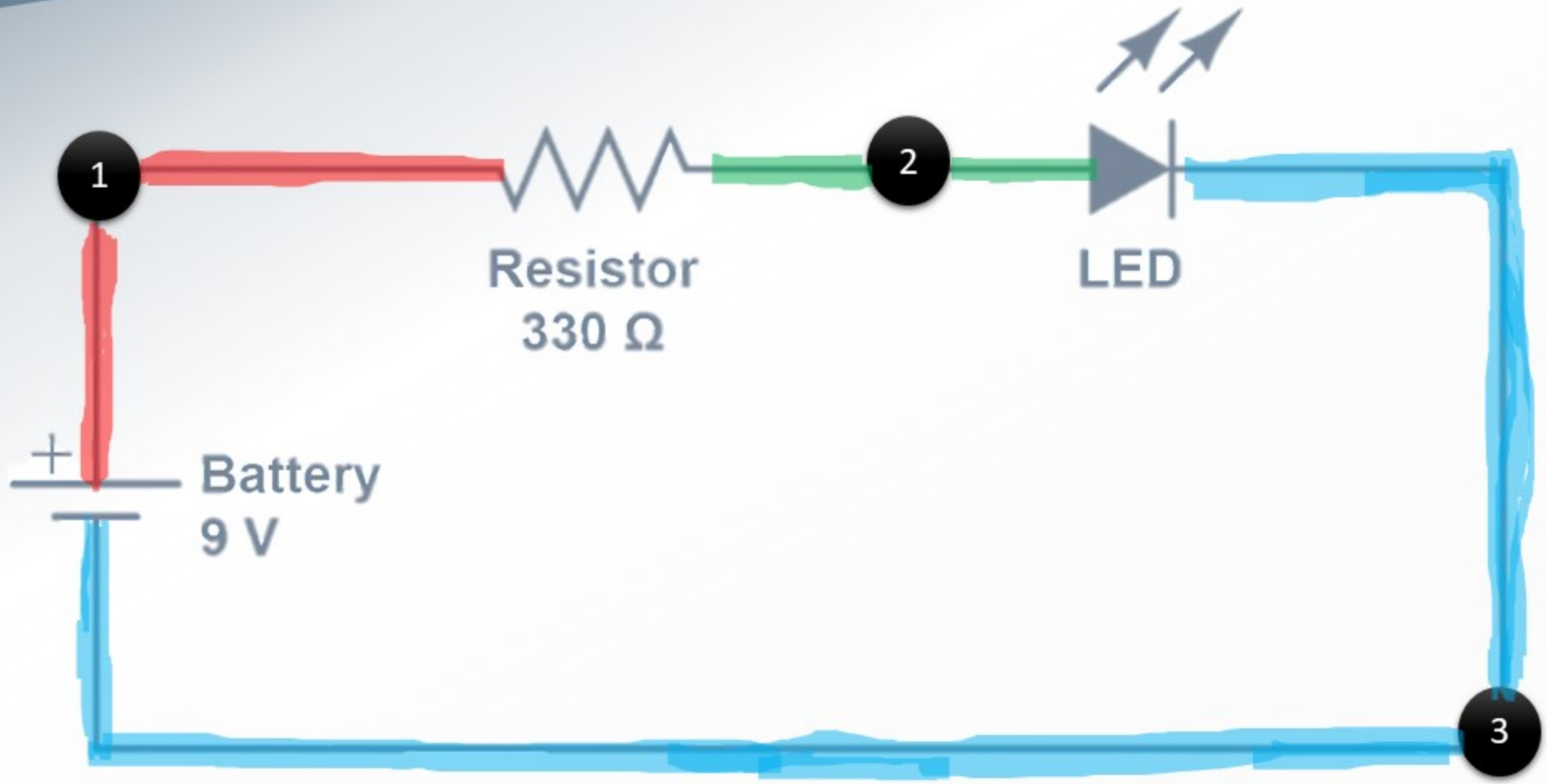

Connection

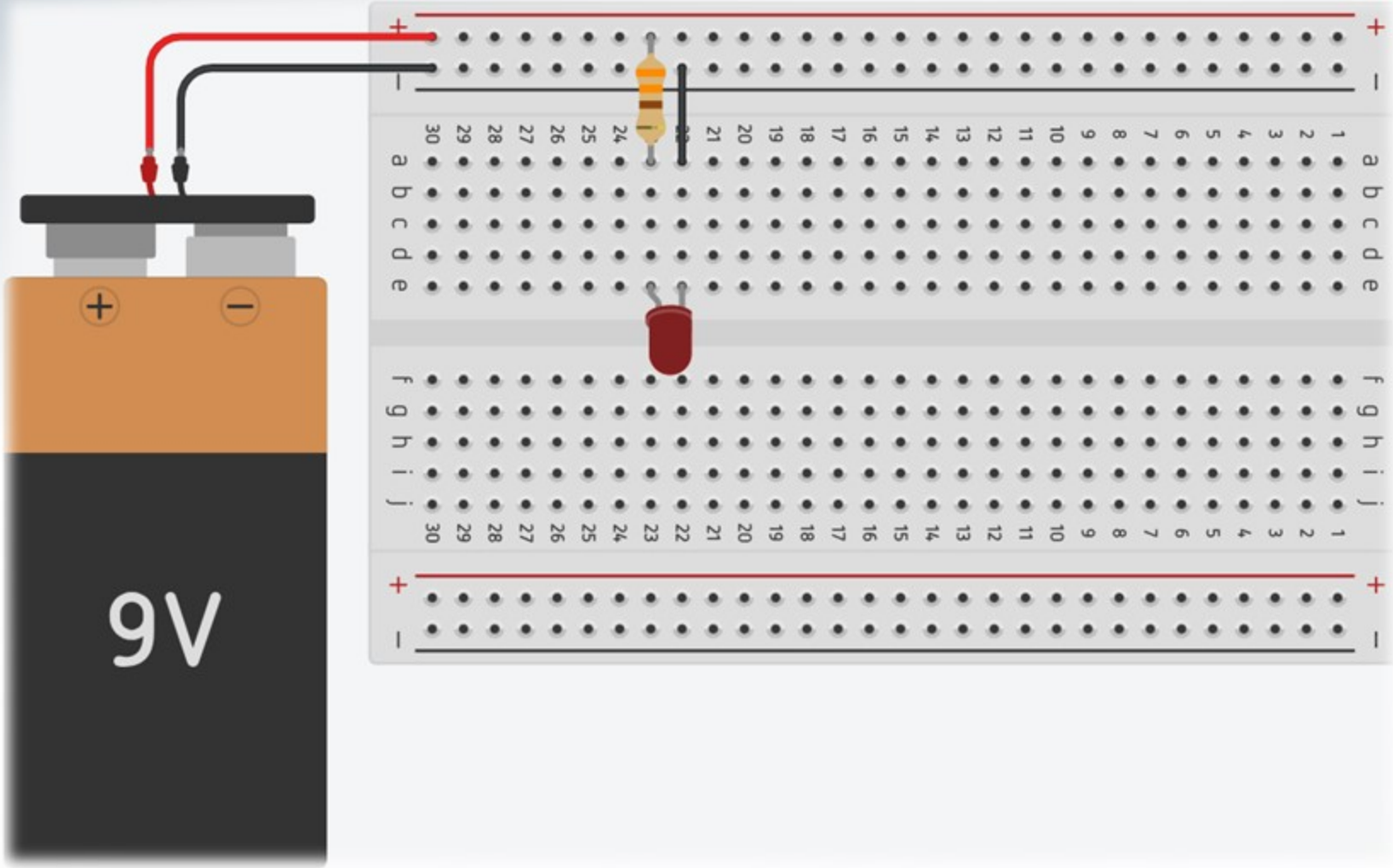

Connection

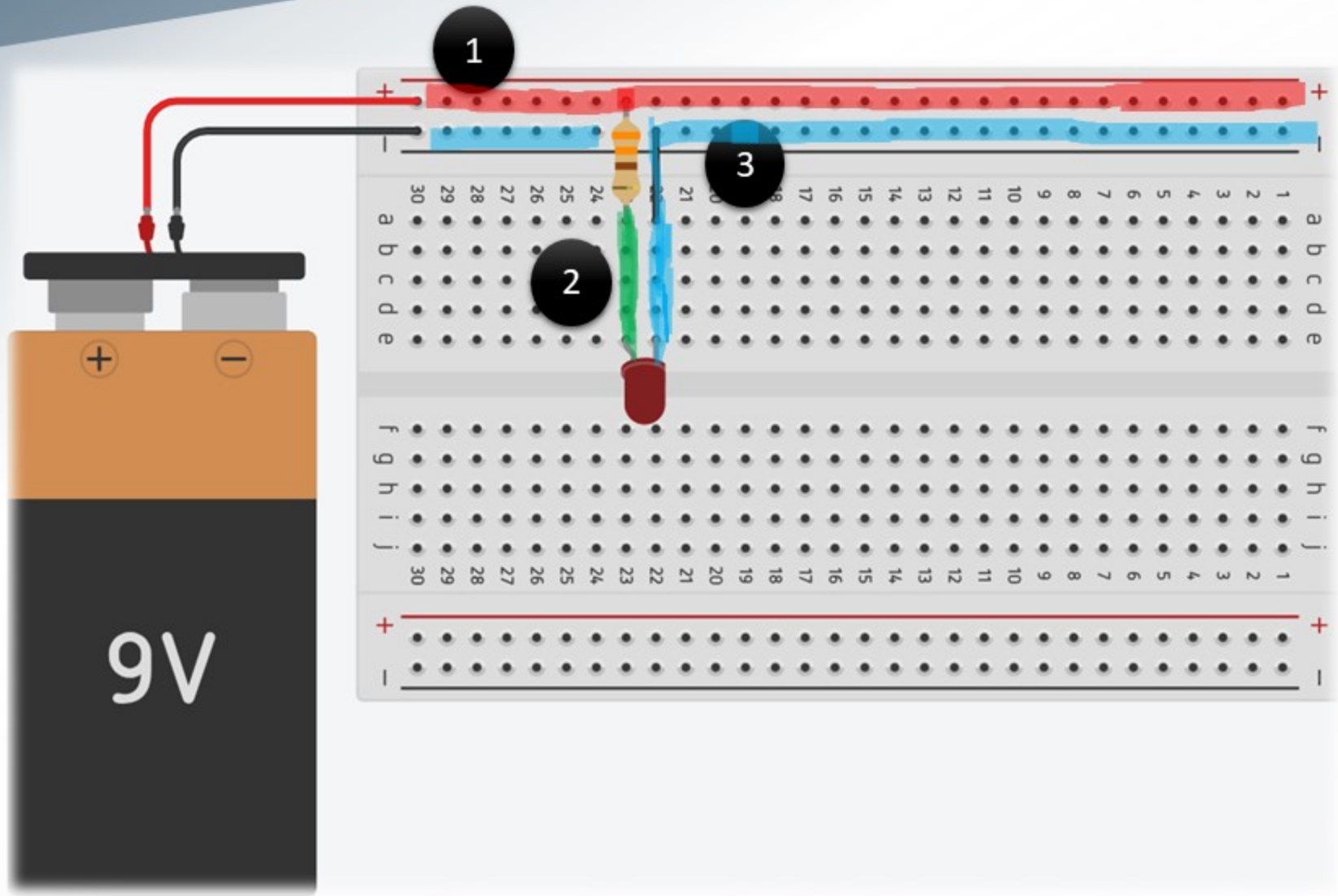

Connection

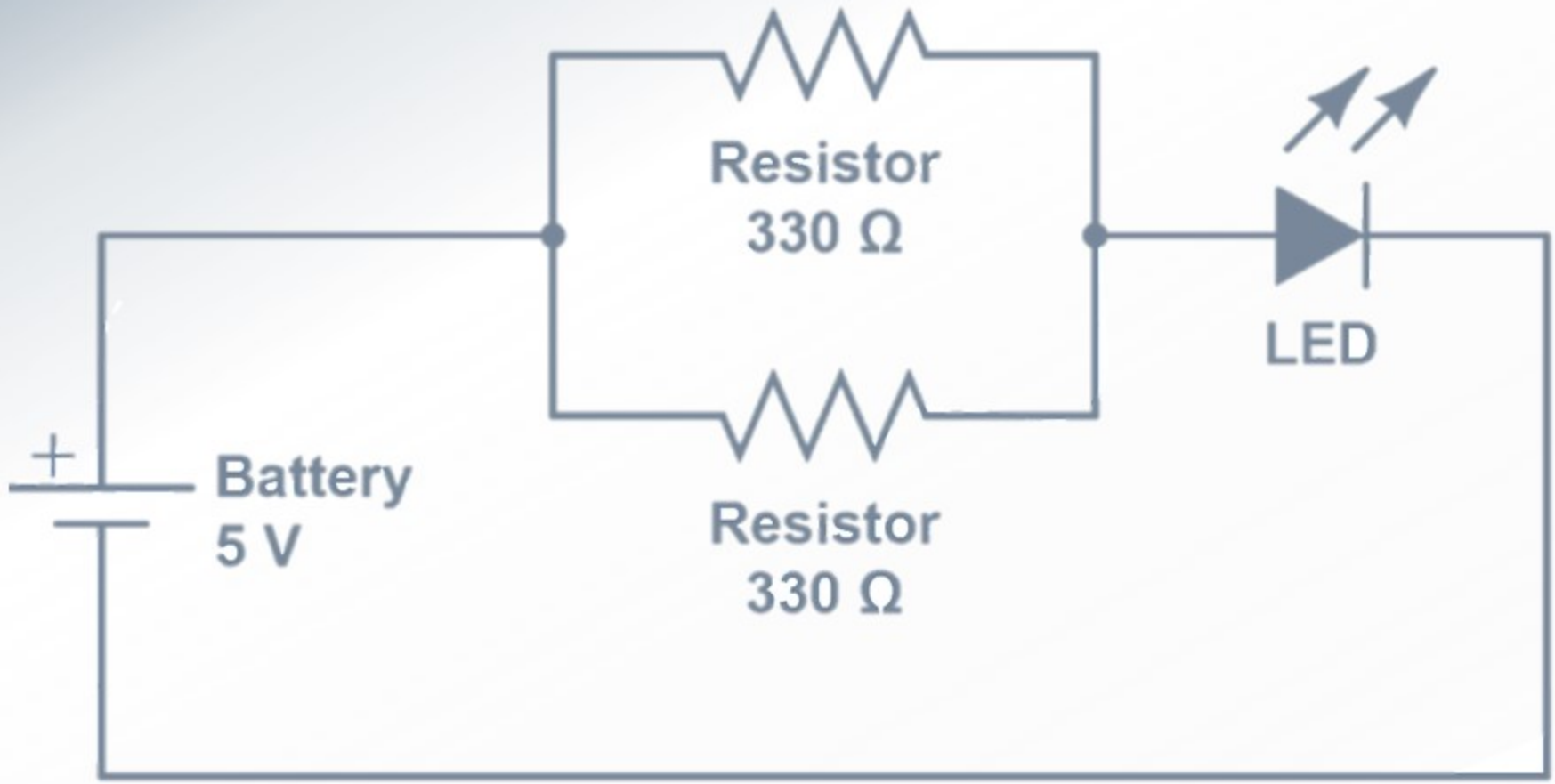

Connection

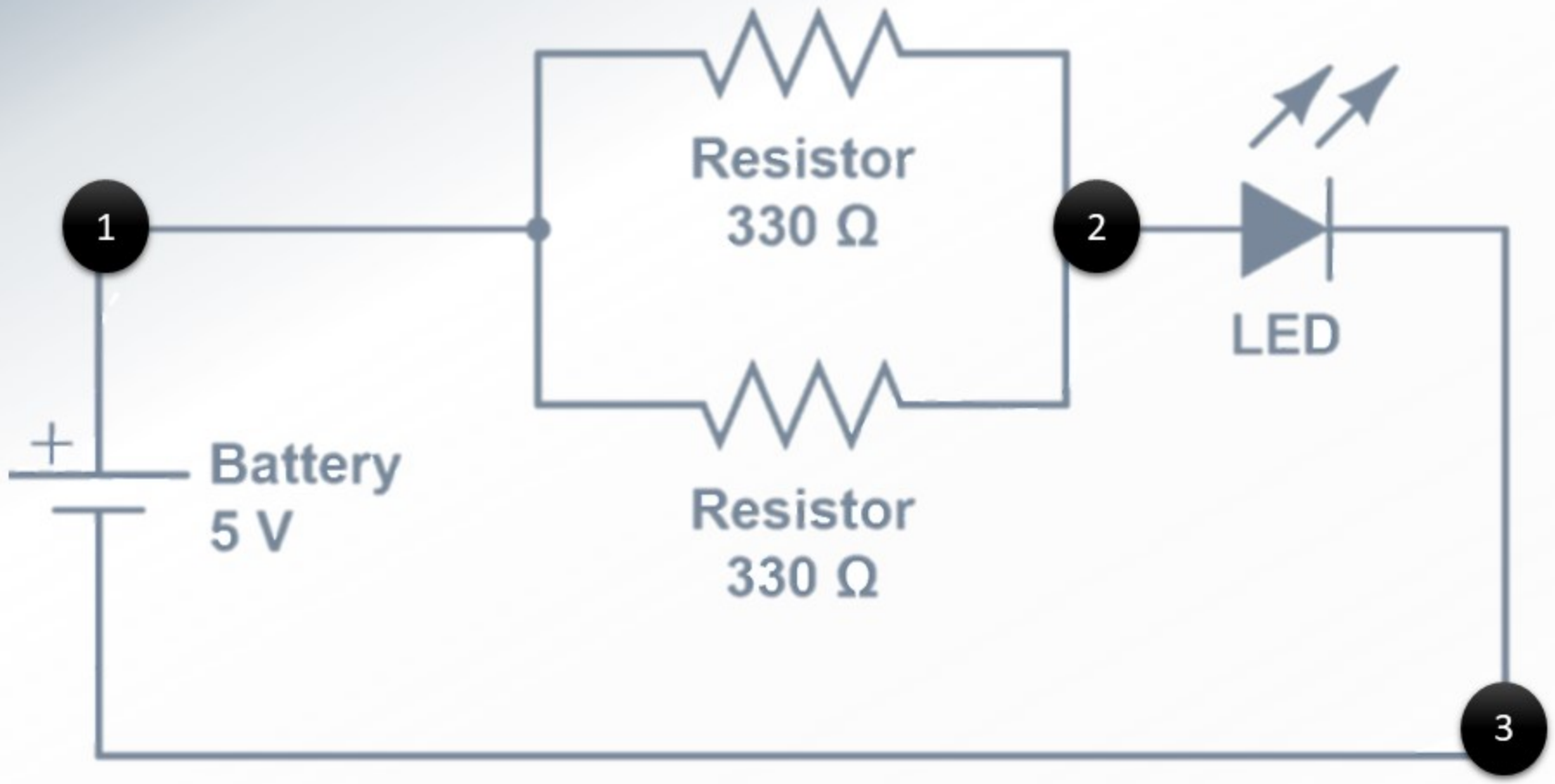

Connection

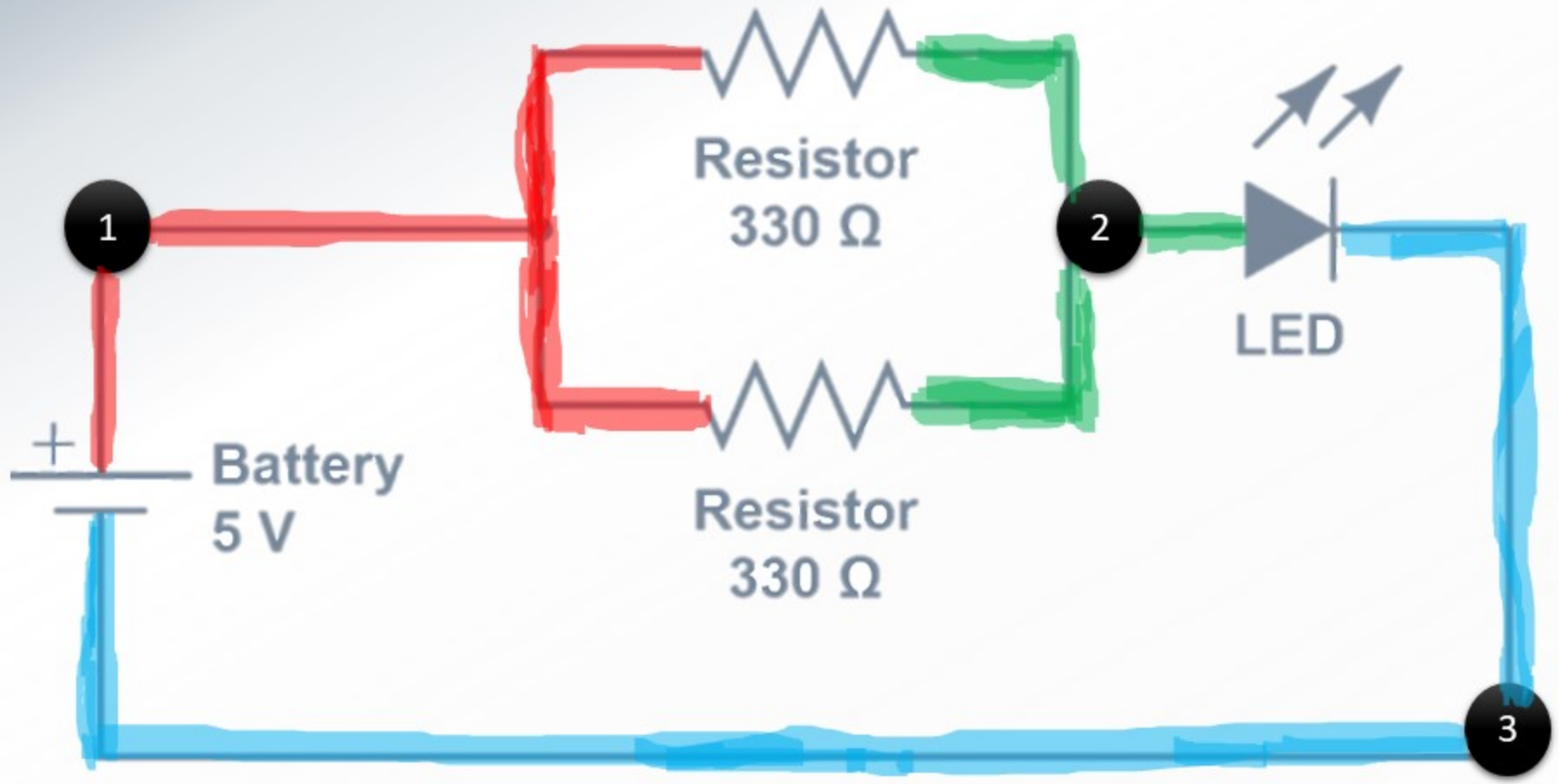

Connection

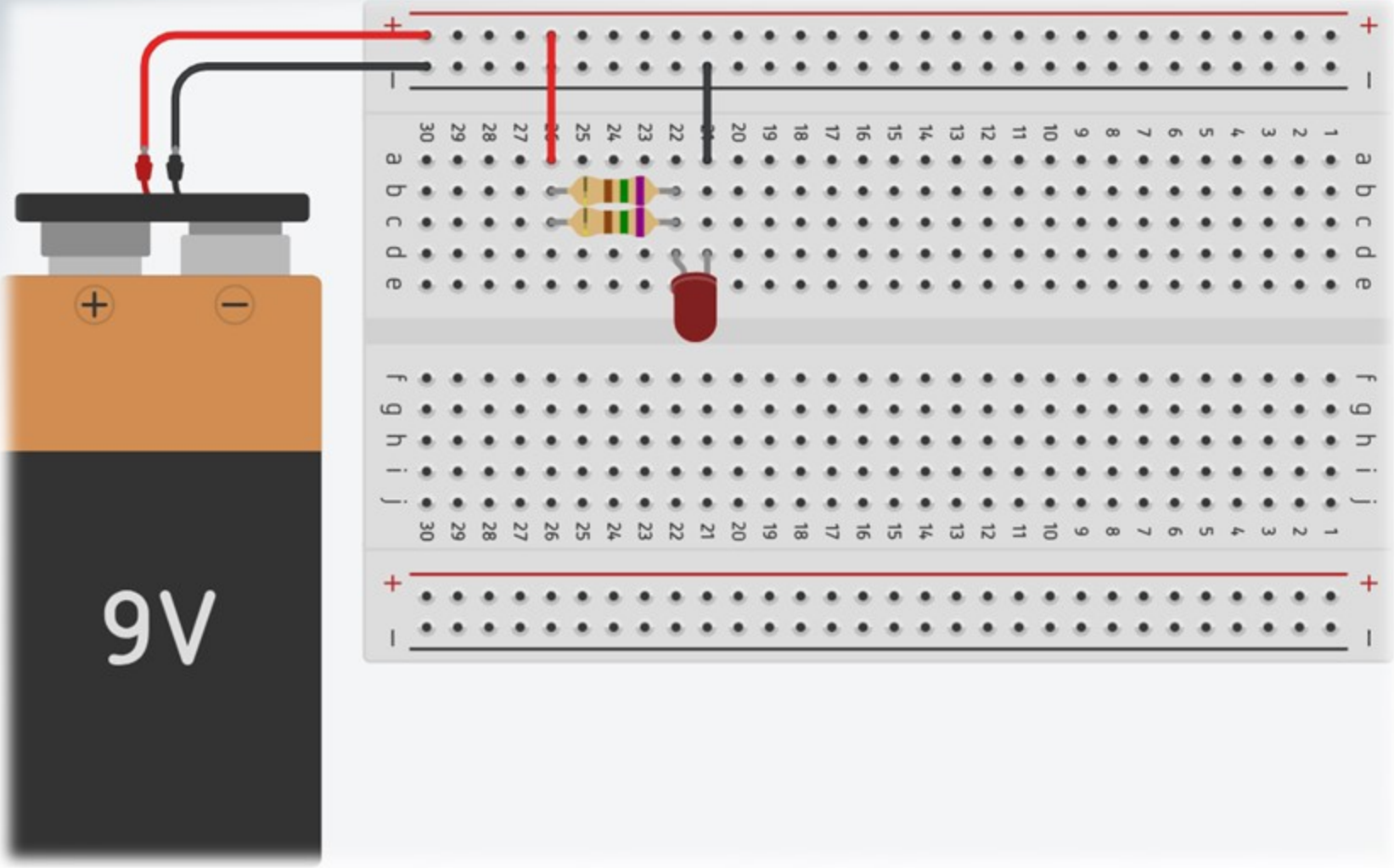

Connection

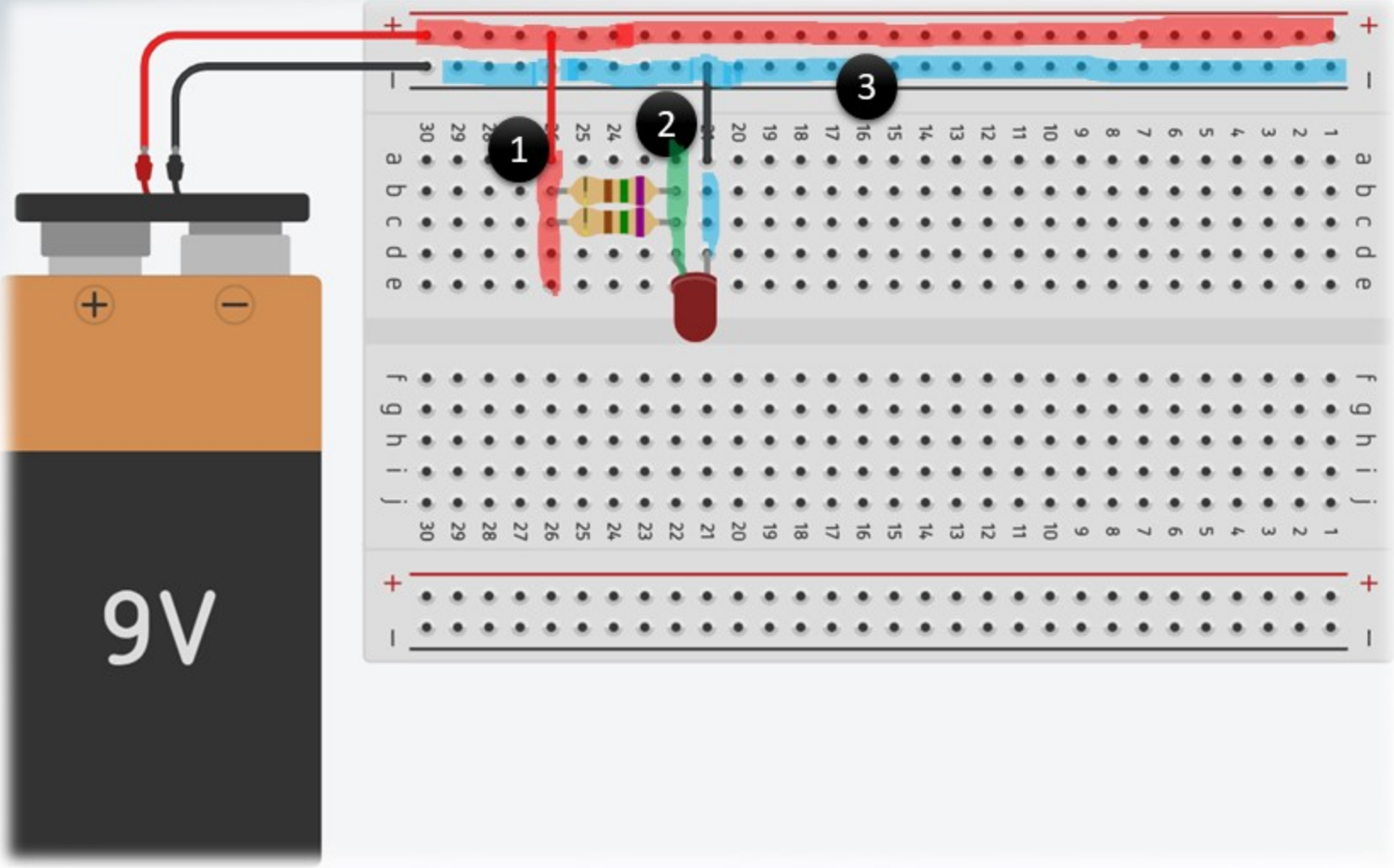

Breadboard Circuit Connection

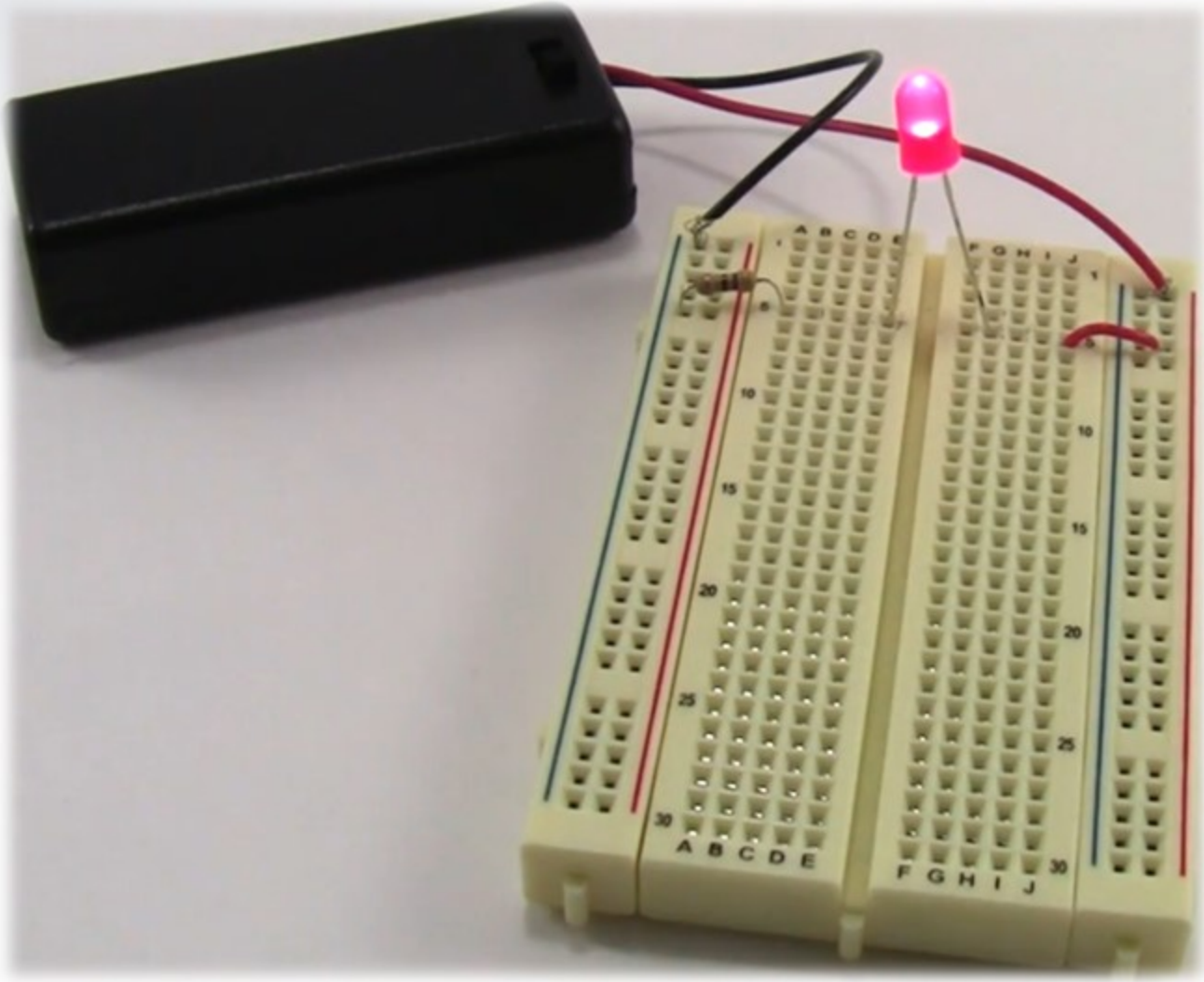

Breadboard Circuit Connection

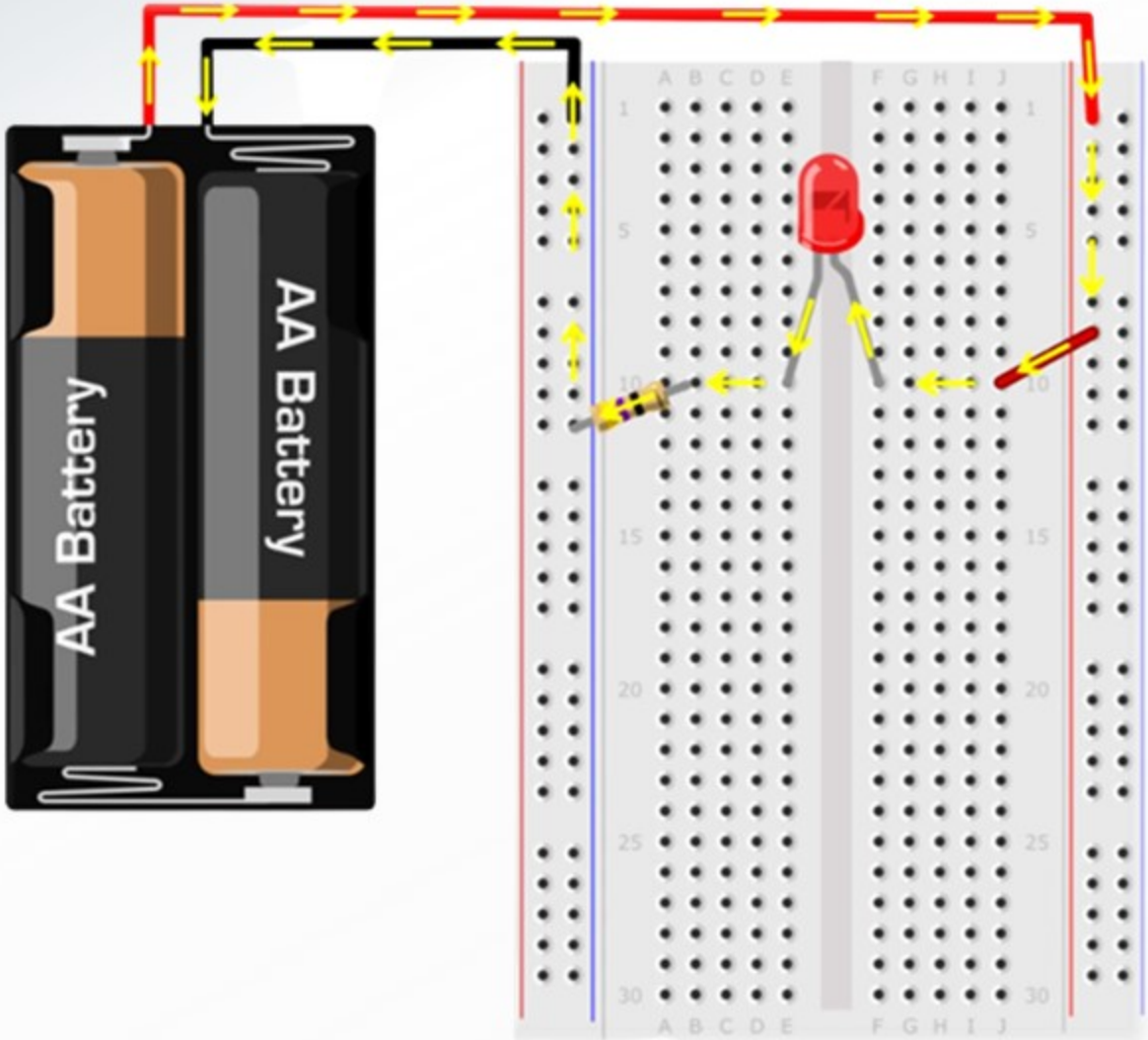

Breadboard Circuit Connection

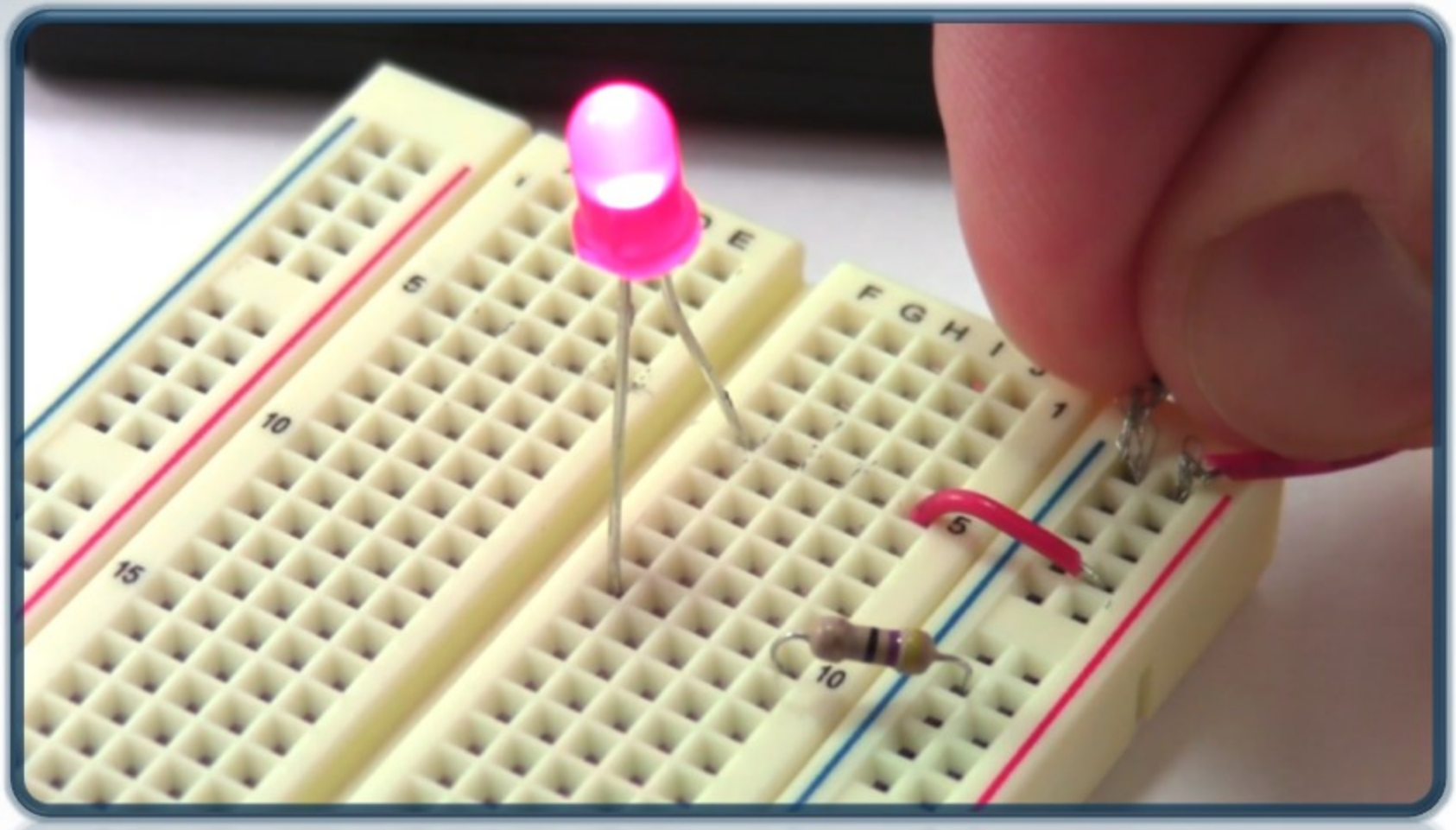

Breadboard Circuit Connection

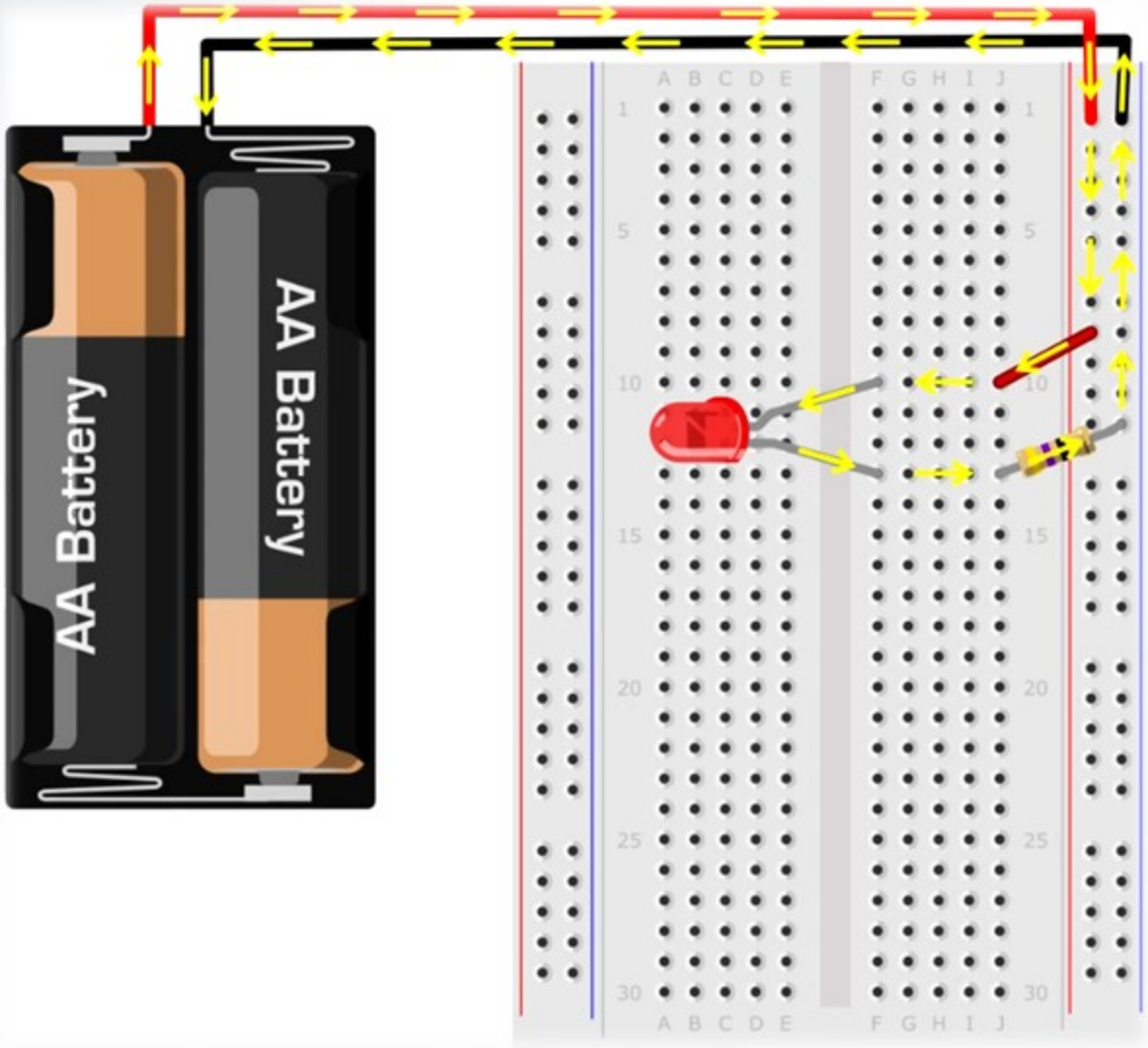

LED Circuit using Arduino as a Power Source

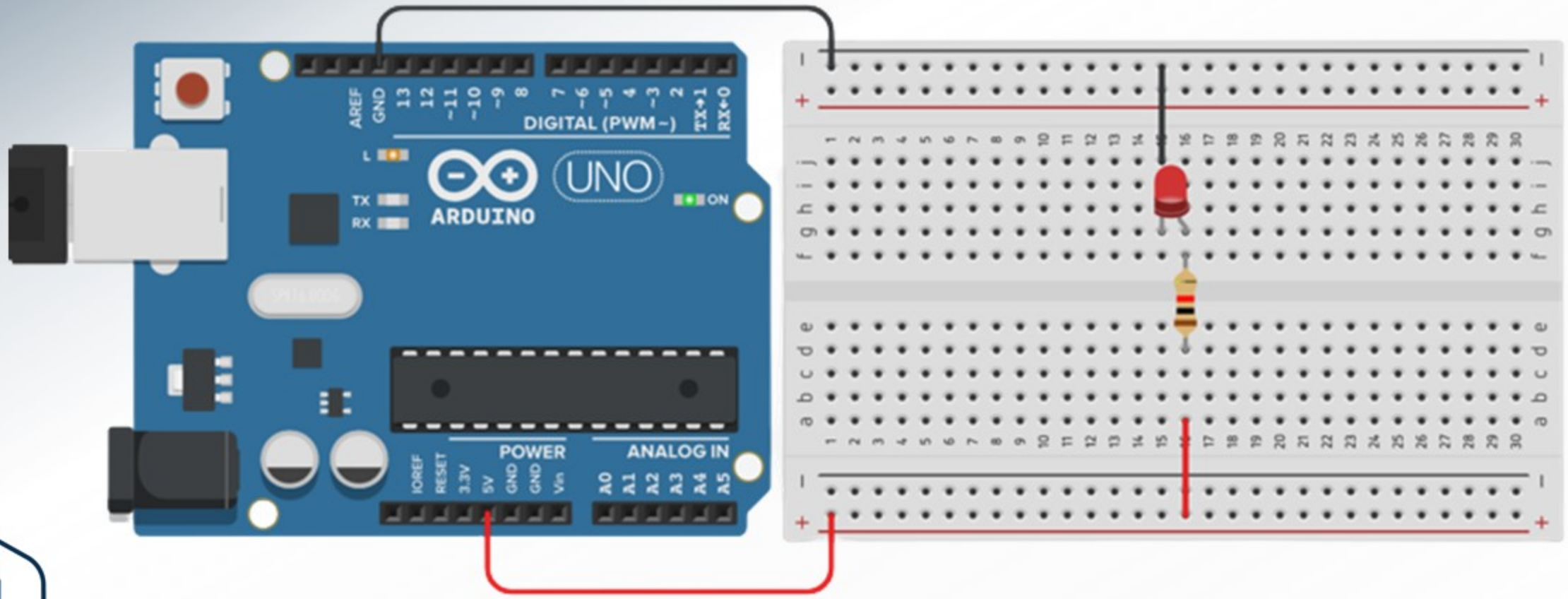

Coding

Arduino Software (IDE):

IDE ➡ Integrated Development Environment

Code

```
Void setup ( ) {
// put your setup code here
}

Void loop ( ) {
//put your main code here
}
```

➡ **Compiler** ➡

Machine code

```
10011101101
11111101000
01011010111
00011111010
10101001011
```

➡ Output

Arduino Software (IDE):

- Void setup()
- Void loop ()
- Semicolon
- Variables
- Const & define
- Delay()
- Digital
- Traffic Light project

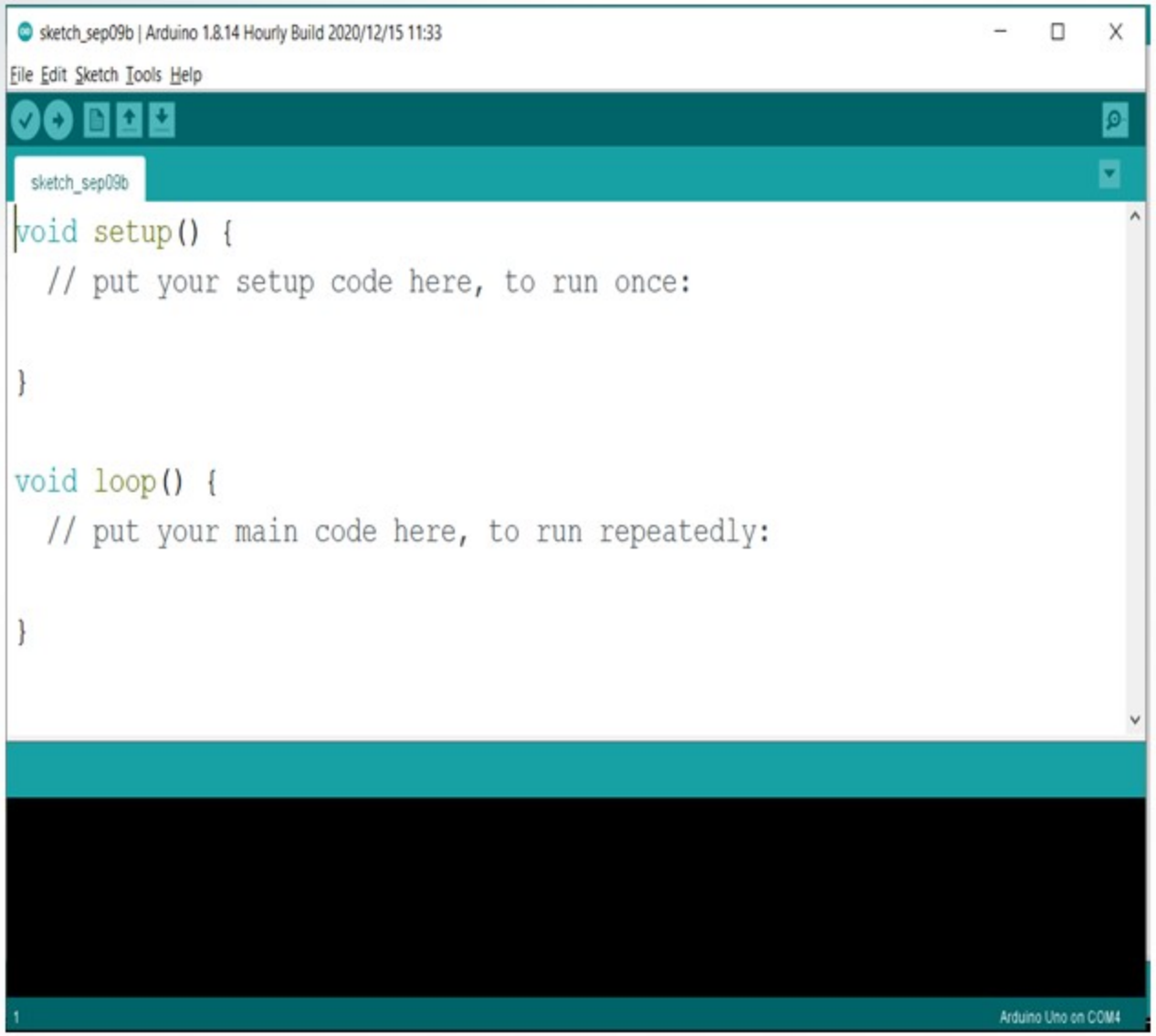

Traffic Lights Project

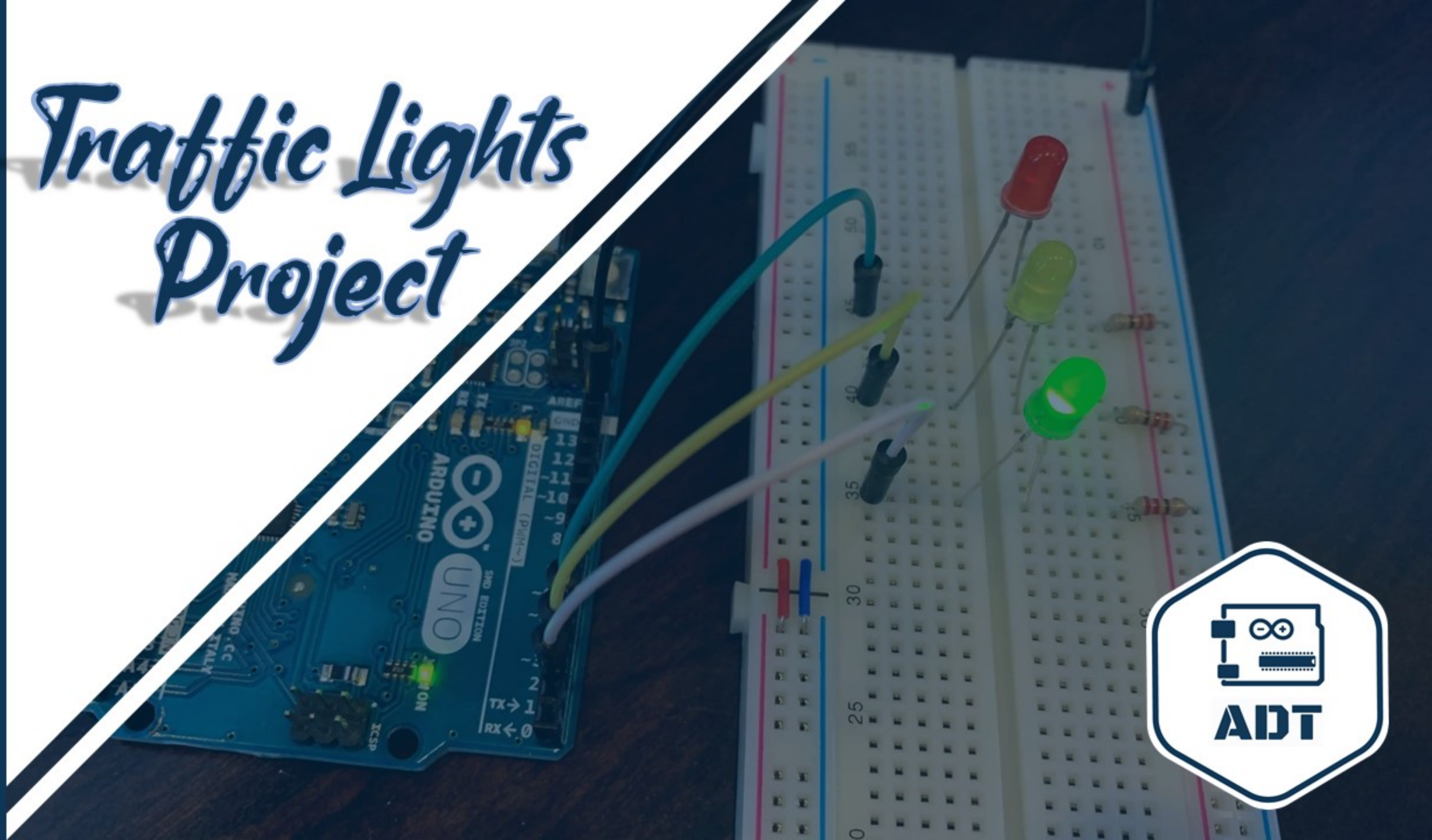

Traffic Lights

Code

```
int red = 8 ;      //The red LED is connected to Pin 8 of the Arduino
int yellow = 10 ; //The yellow LED is connected to Pin 10 of the Arduino
int green = 12 ;  //The green LED is connected to Pin 12 of the Arduino

void setup() {
  pinMode(red,OUTPUT);
  pinMode(yellow,OUTPUT);
  pinMode(green,OUTPUT);
}

void loop() {
   // Turning the red LED on and the other LEDs off

  digitalWrite(red, HIGH);
  digitalWrite(yellow, LOW);
  digitalWrite(green, LOW);
  delay(2000);    // wait 2 seconds

   // Turning the yellow LED on and the other LEDs off

  digitalWrite(red, LOW);
  digitalWrite(yellow, HIGH);
  digitalWrite(green, LOW);
  delay(2000);    // wait 2 seconds

   // Turning the green LED on and the other LEDs off

  digitalWrite(red, LOW);
  digitalWrite(yellow, LOW);
  digitalWrite(green, HIGH);
  delay(2000);    // wait 2 seconds
}
```

Traffic Lights

Connection

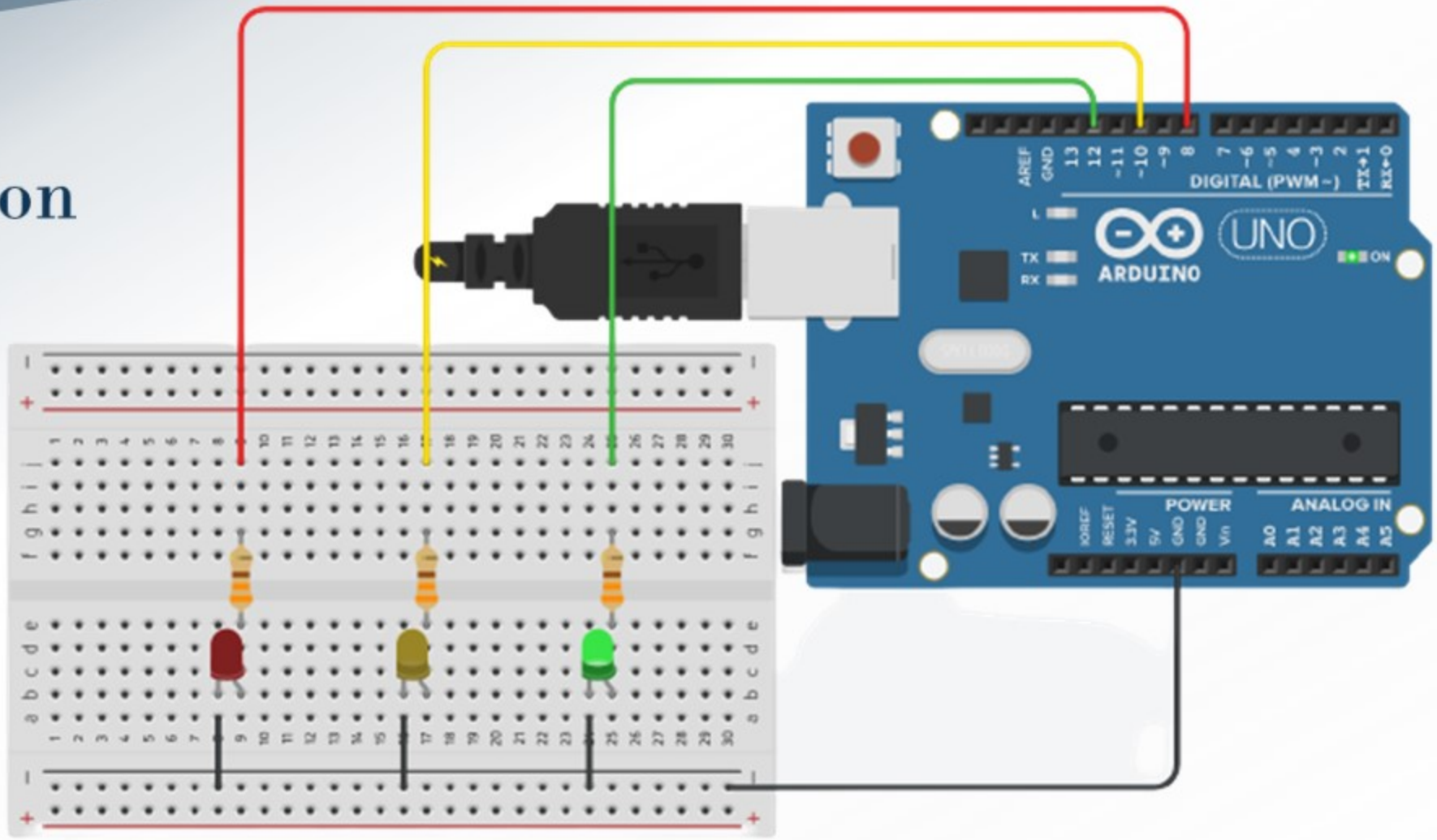

Police Siren Lights Project

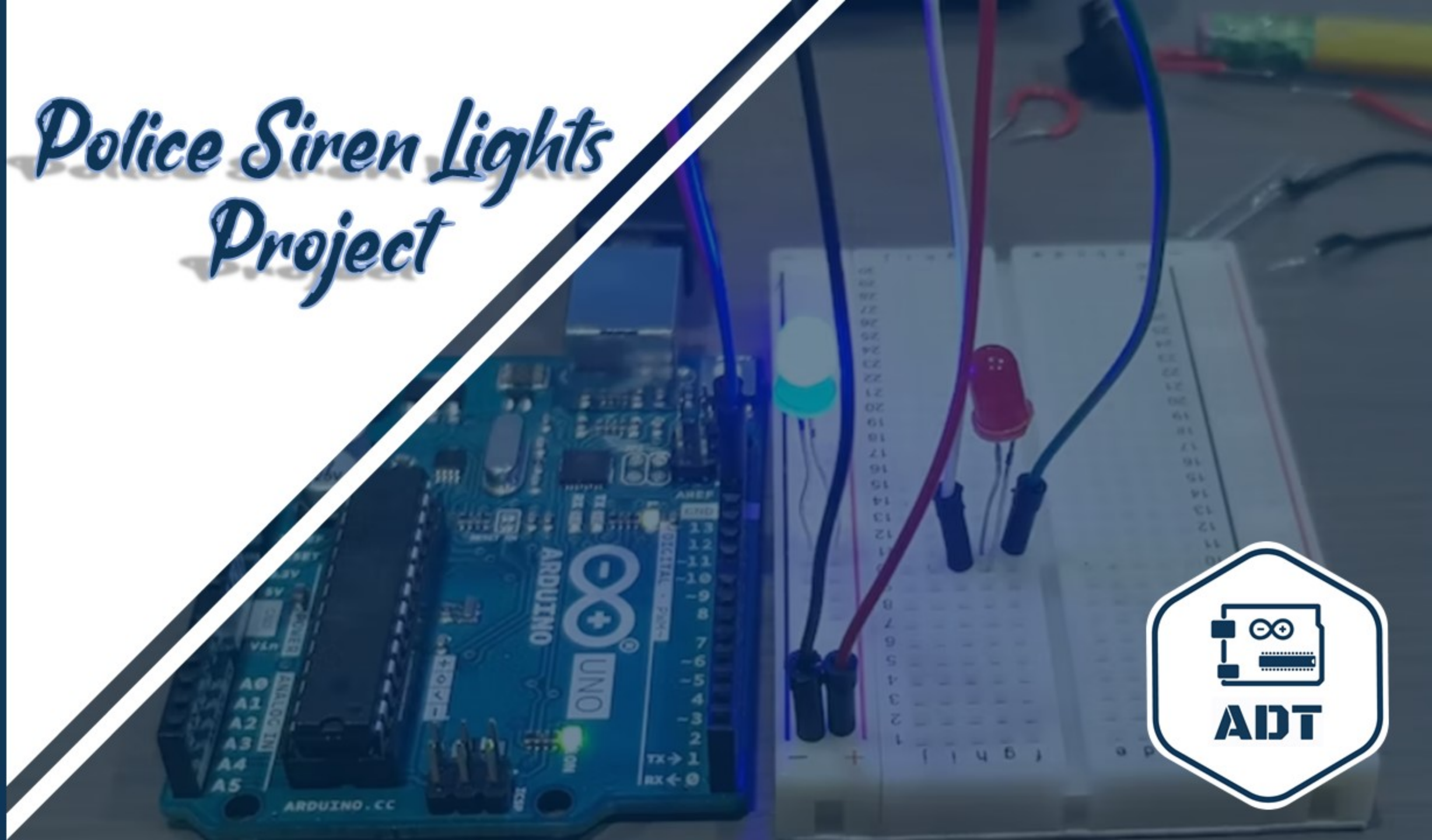

Police Siren Lights

Code

```
int blue = 10 ; // the blue LED is connected to Pin 10
int red  = 12 ; // the red LED is connected to Pin 12

void setup() {
  pinMode(blue,OUTPUT);
  pinMode(red,OUTPUT);
}

void loop() {

  digitalWrite(blue, HIGH);   // turning on the blue LED
  delay(100);                 // wait 100 milliseconds

  digitalWrite(blue, LOW);    // turning off the blue LED
  delay(100);                 // wait 100 milliseconds

  digitalWrite(red, HIGH);    // turning on the red LED
  delay(100);                 // wait 100 milliseconds

  digitalWrite(red, LOW);     // turning off the red LED
  delay(100);                 // wait 100 milliseconds
}
```

Police Siren Lights

Connection

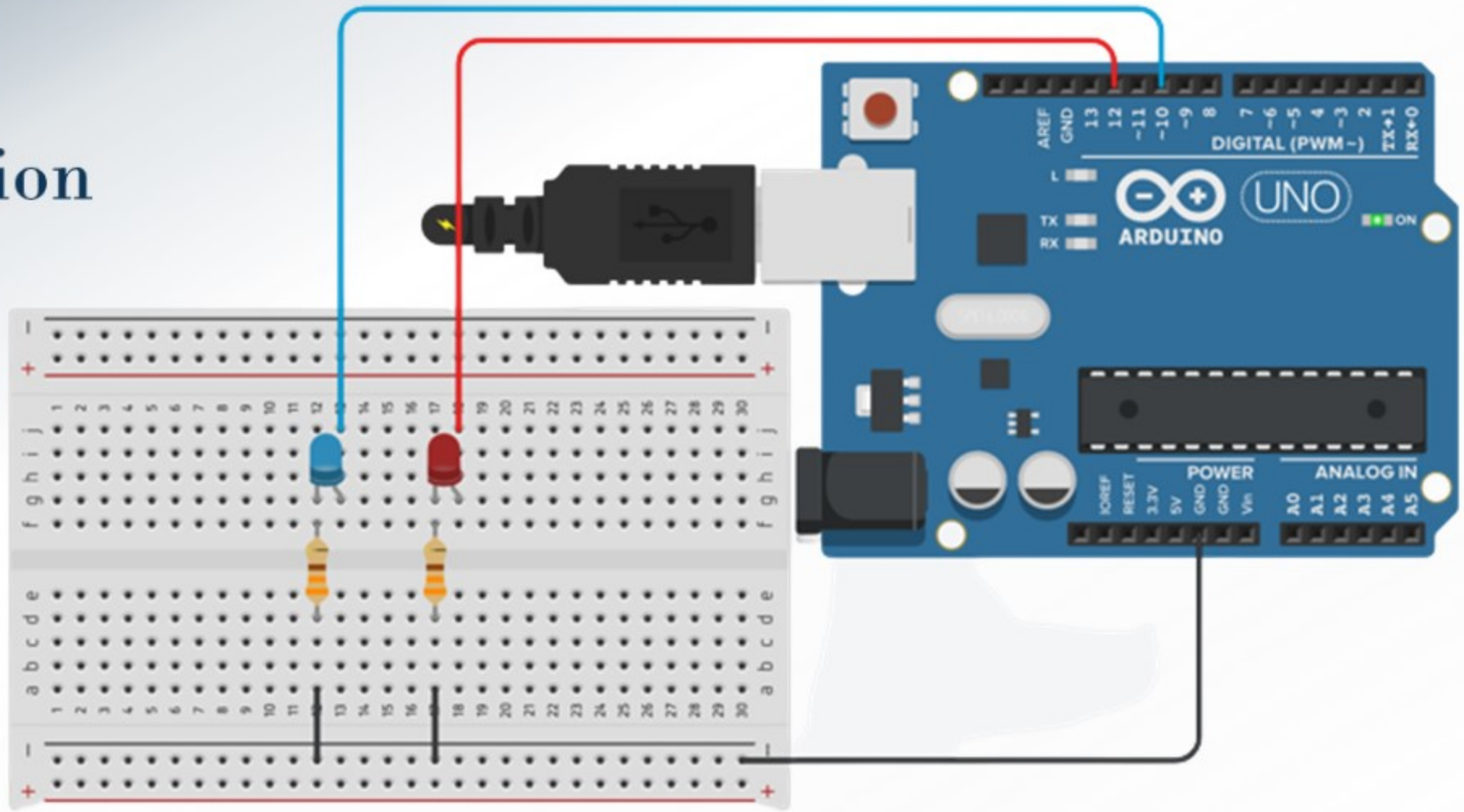

Thank you !!