PROFESSIONAL LOUDSPEAKERS

8PR200

8" - 200 W - 95 dB - 8 Ohm

NOMINAL SPECIFICATIONS

Nominal Diameter	200 mm (8 in)
Overall Diameter	223.75/207.9 mm (8.81/8.18 in)
Bolt Circle Diameter	210 mm (8.27 in)
Baffle Cutout Diameter	183 mm (7.20 in)
Depth	116.7 mm (4.59 in)
Flange and Gasket Thickness	10.7 mm (0.42 in)
Net Weight	**2.1 kg (4.6 lb)**
Shipping Box (Single Carton Box)	235 x 235 x 155 mm (9.3 x 9.3 x 6.1 in)
Shipping Weight	2.5 kg (5.5 lb)

PART NUMBER

Push Terminals - 8 Ohm Version	02003993

NOTES:

(1) 2 Hours Test According to AES 2-1984 Rev. 2003
(2) Maximum power is defined as 3dB greater than nominal power.
(3) Treated Polycotton
(4) Xmax= [(winding depth - magnetic gap depth)/2] + (magnetic gap depth/3)
(5) Maximum excursion before permanent damage

TECHNICAL PARAMETERS

Nominal Impedance	8 Ohm
Minimum Impedance	6.4 Ohm
AES Power Handling **(1)**	200 W
Maximum Power Handling (2)	**400 W**
Sensitivity (1W/1m)	**95 dB**
Frequency Range	70÷5000 Hz
Voice Coil Diameter	**52 mm (2 in)**
Winding Material	Al
Former Material	Glass Fiber
Winding Depth	19.3 mm (0.76 in)
Magnetic Gap Depth	**9 mm (0.35 in)**
Flux Density	1.15 T
Magnet	Neodymium Ring
Basket Material	Aluminum
Demodulation	Aluminum Ring
Cone Surround **(3)**	Triple Roll
NET Air Volume filled by Loudspeaker	1 dm^3 (0.035 ft^3)
Spider Profile	1x variable height waves

THIELE & SMALL PARAMETERS

Fs	58 Hz
Re	5.1 Ohm
Qes	0.38
Qms	9.4
Qts	0.37
Vas	16.9 dm^3 (0.60 ft^3)
Sd	209 cm^2 (32.40 in^2)
Xmax **(4)**	8.15 mm
Xdamage **(5)**	13.5 mm
Mms	27.2 g
Bl	11.5 N/A
Le	0.55 mH
Mmd	23.8 g
Cms	0.28 mm/N
Rms	1.1 kg/s
Eta Zero	0.84 %
EBP	153 Hz

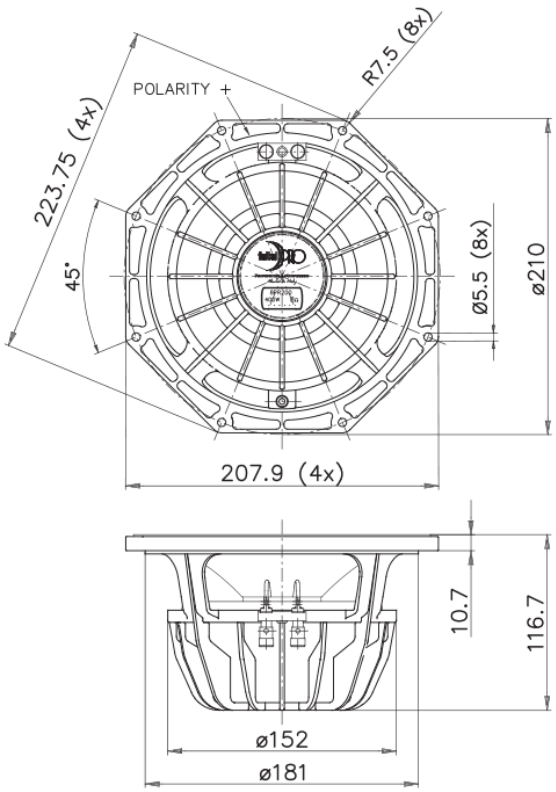

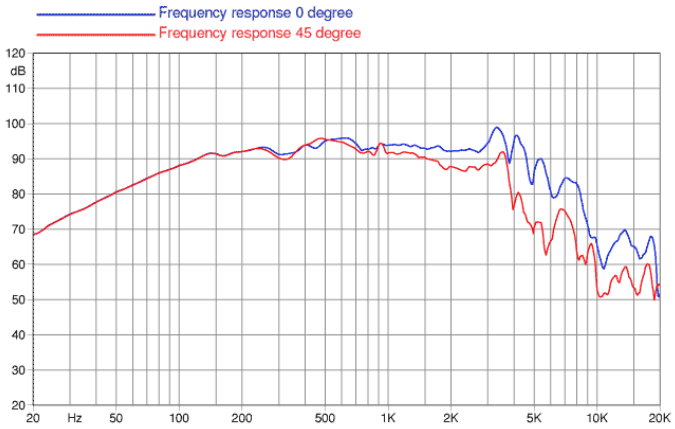

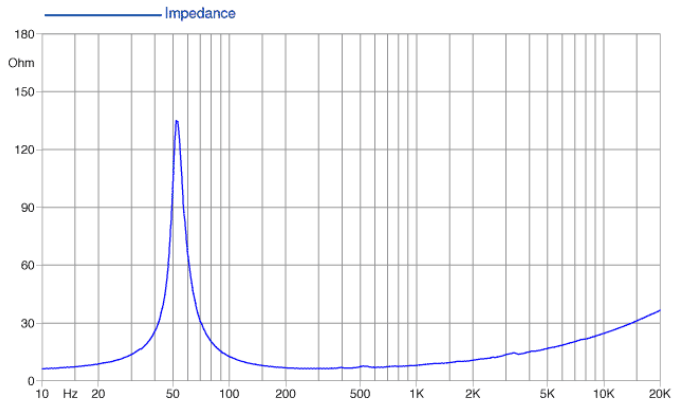

©Copyright 2026 **Faital S.p.A.** • All rights reserved.