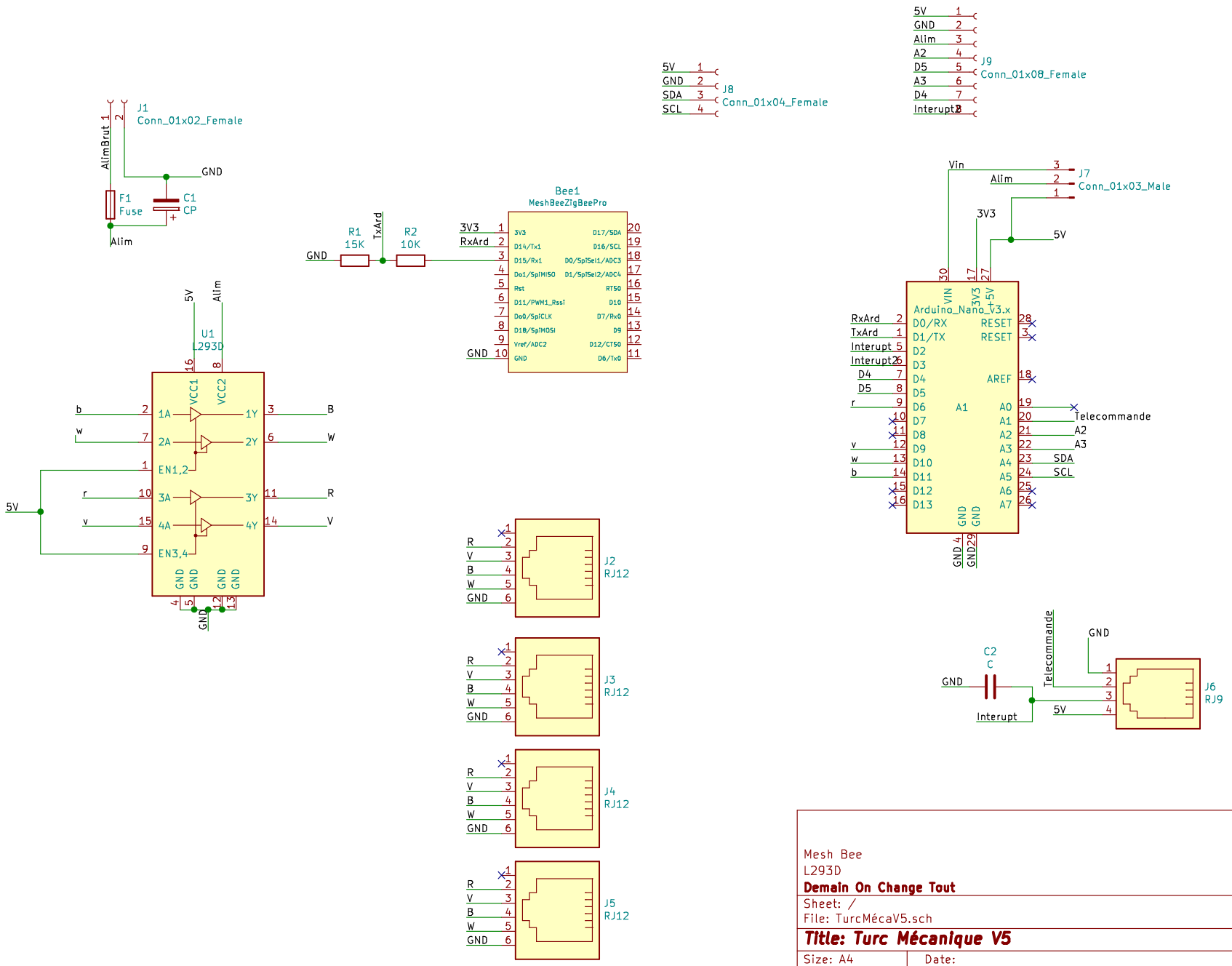

Mesh Bee
L293D
Demain On Change Tout

Sheet: /
File: TurcMécaV5.sch

Title: Turc Mécanique V5

Size: A4	Date:	**Rev: 5**
KiCad E.D.A. kicad 5.0.2-bee76a070ubuntu14.04.1		Id: 1/1