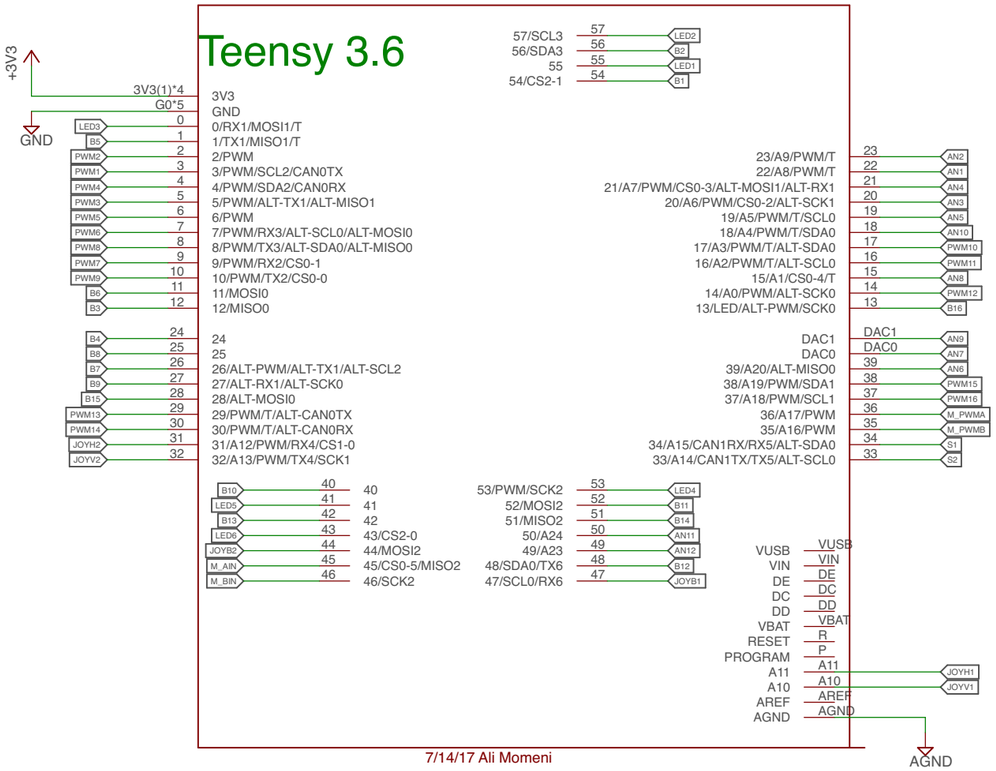

7/14/17 Ali Momeni

POWER

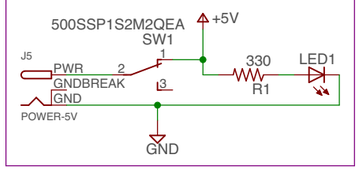

ACTUATORS

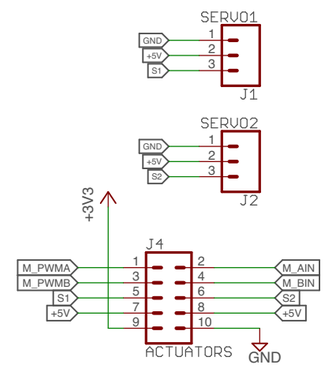

MIDI CONNECTIONS

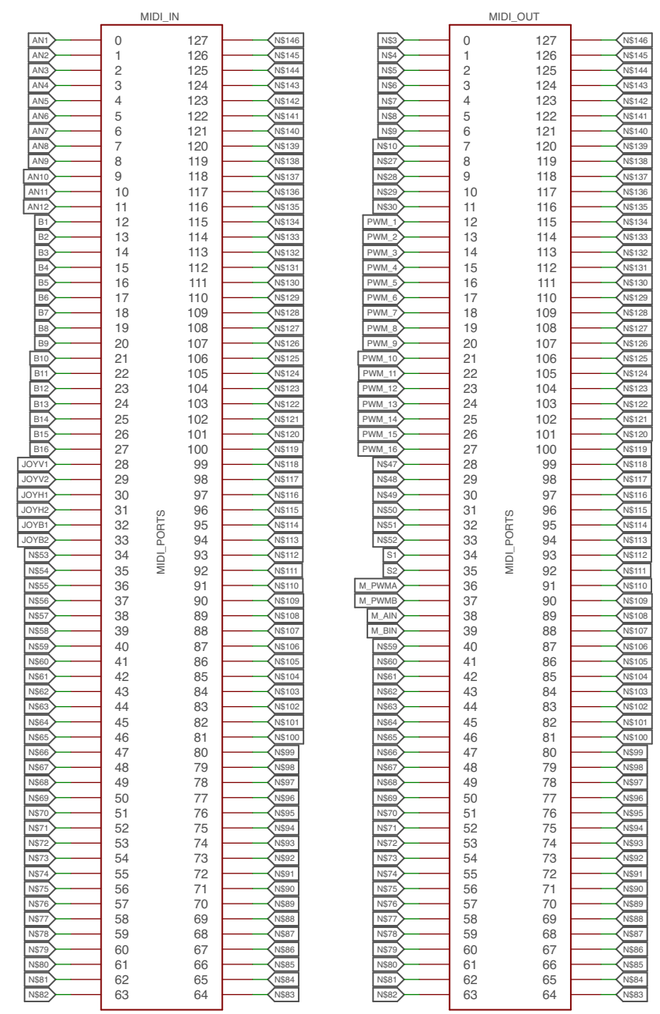

JOYSTICKs

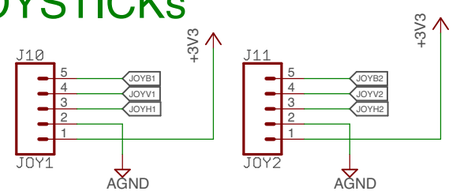

STRIPS

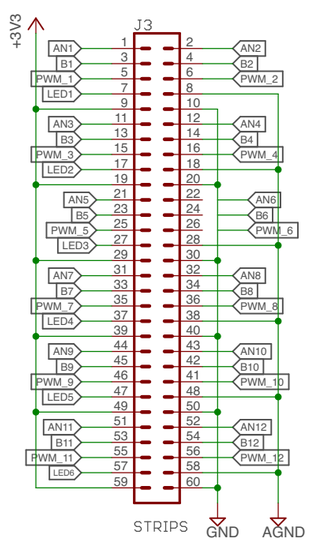

BUT-LED-KNOBs

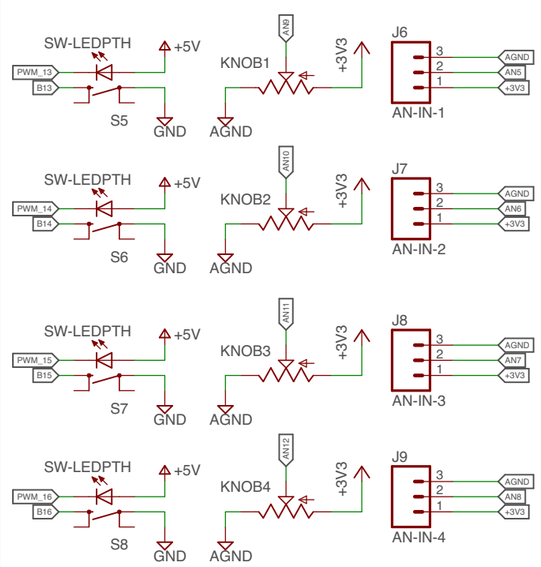
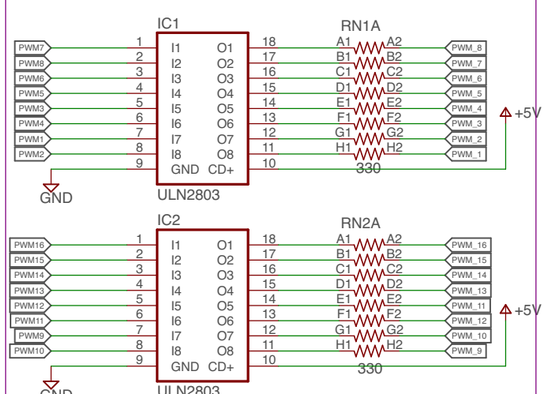
PWM-DRIVER