ทดลองปฏิบัติ

Outline

- ทดลองใช้งาน DHT 11 Module
- ทดลองใช้งาน BH1750 Module
- ทดลองใช้งาน Ultra Sonic Module HC-SR04+
- ทดลองใช้งาน LCD 16x2 i2c Display Module
- ประยุกต์การใช้งานลักษณะ IoT

DHT 11 Module

- โมดูลวัดอุณหภูมิ และ ความชื้น
- 3 to 5V power and I/O
- วัดความชื้นระดับ 20-80% โดยมีความผิดพลาดในการวัดไม่เกิน 5%
- วัดอุณหภูมิ 0-50°C โดยมีความผิดพลาดในการวัดไม่เกิน ±2°C
- วามถี่ในการวัด 1 Hz (อ่านค่าได้วินาทีละครั้ง)

ที่มา : https://goo.gl/E2XeRu

NodeMCU DHT11 Wiring Diagram

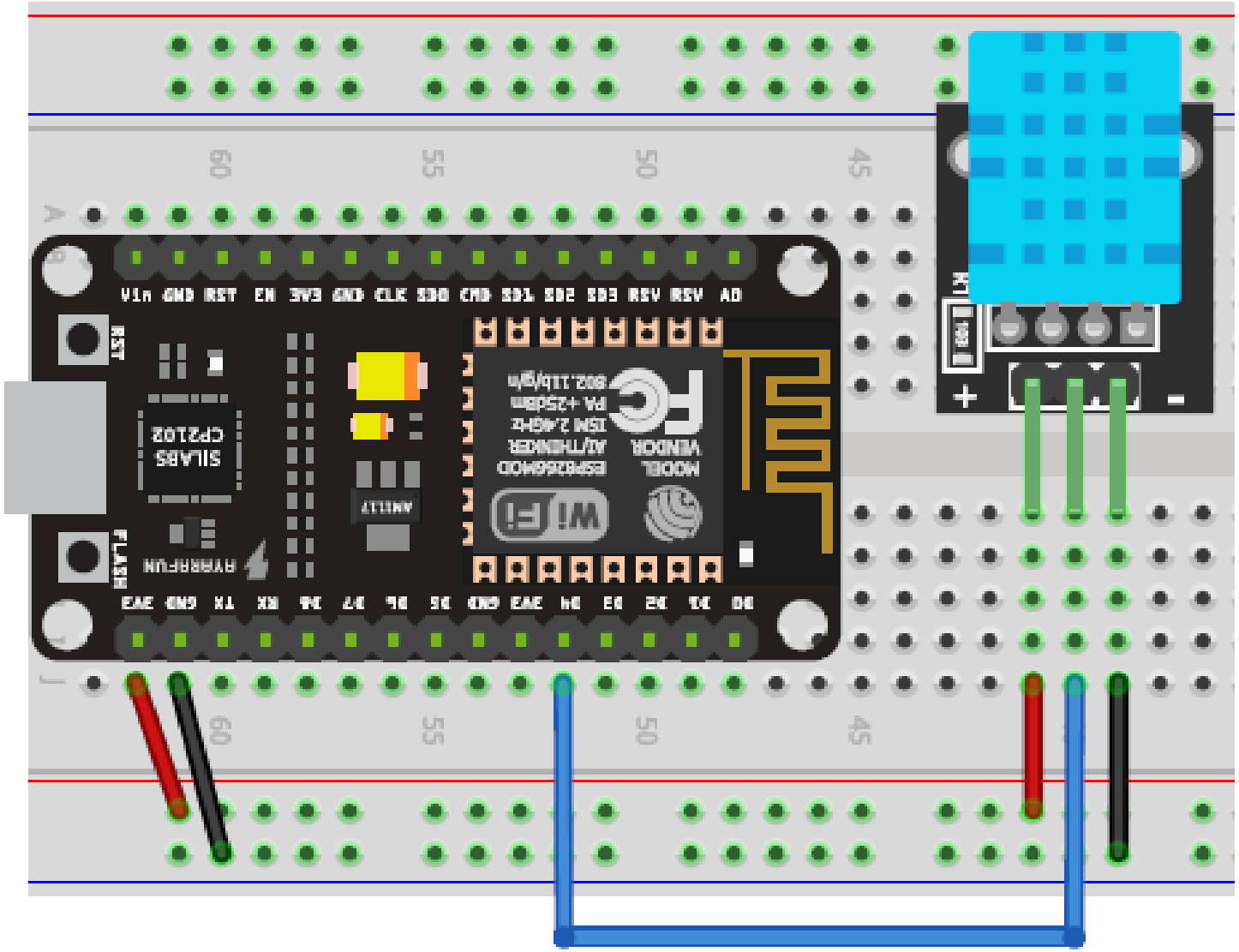

WeMos DHT11 Wiring Diagram

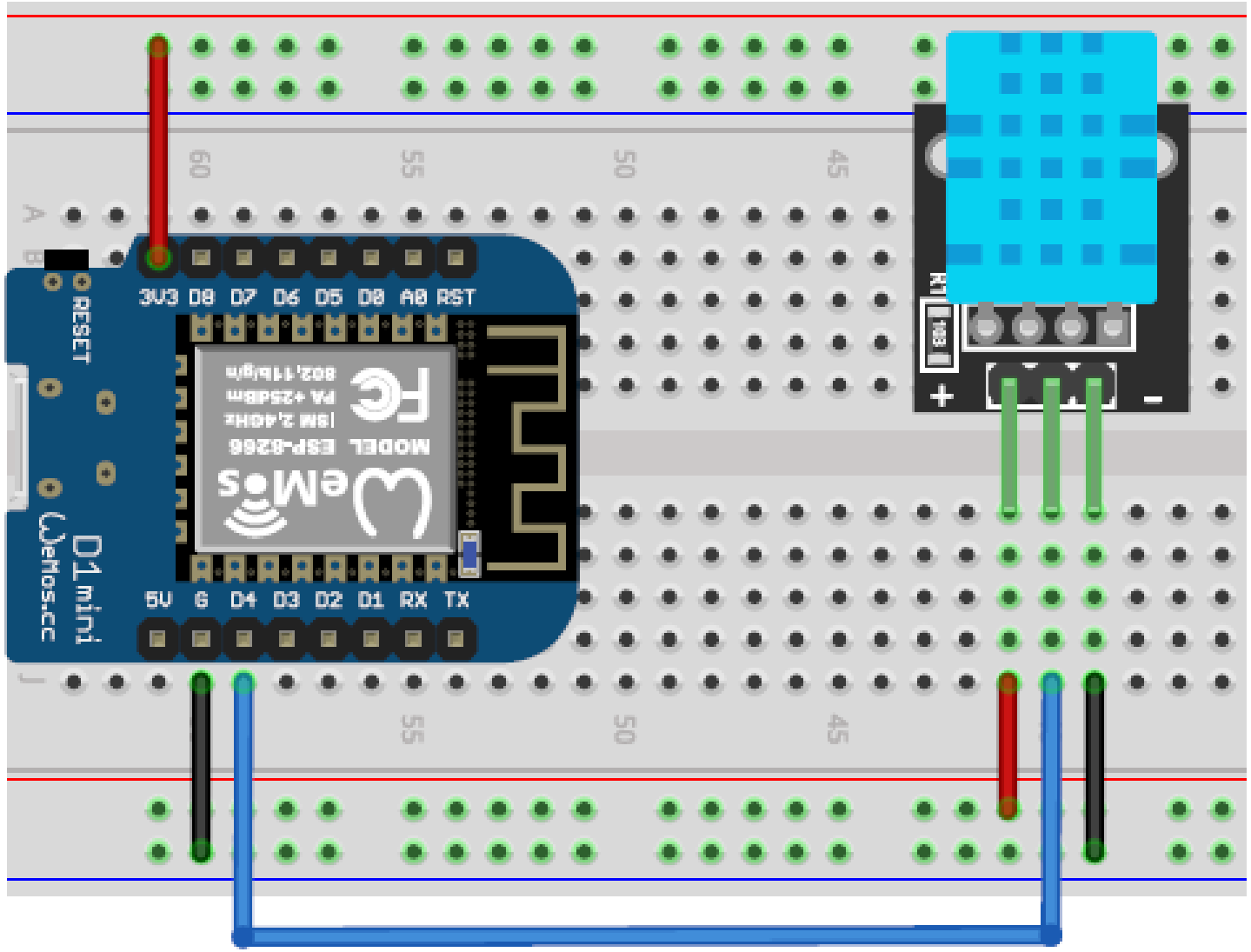

esp8266_dht11_lib_demo-1

```
#include "DHT.h" // -> https://github.com/adafruit/DHT-sensor-library

// define the DHT sensor type to be used (tested: DHT11 and DHT22)
#define DHT_TYPE    DHT11
//#define DHT_TYPE    DHT22

#define DHT_PIN     (2)       // use the D4 pin (GPIO-2)

// note: use Vcc=3.3V for the DHTxx sensor

DHT dht( DHT_PIN, DHT_TYPE );

// global variable used for sprintf()
char sbuf[32];
```

esp8266_dht11_lib_demo-1

```
void setup() {
  Serial.begin( 115200 );
  Serial.println( F("\n\n\n\n") );
  delay(1000);
  Serial.println( F("ESP8266 DHTxx Demo...") );
  dht.begin();
}
```

esp8266_dht11_lib_demo-1

```
void loop() {
  float humid = dht.readHumidity();  // read the humidity
  float temp = dht.readTemperature(); // read temperature as Celsius

  // Check if any reads failed and exit early (to try again).
  if ( isnan(humid) || isnan(temp) ) {
     Serial.println( F("Failed to read from DHT sensor!") );
     delay(1000);
     return;
  }
  Serial.print( F("Humidity: ") );
  dtostrf( humid, 3, 1, sbuf );
  Serial.print( sbuf );
  Serial.print( F(" %RH, ") );
  Serial.print( F("Temperature: ") );
  dtostrf( temp, 3, 1, sbuf );
  Serial.print( sbuf );
  Serial.println( F(" deg.C") );
  // wait a few seconds between measurements.
  delay(2000);
}
```

esp8266_dht11_lib_demo-1

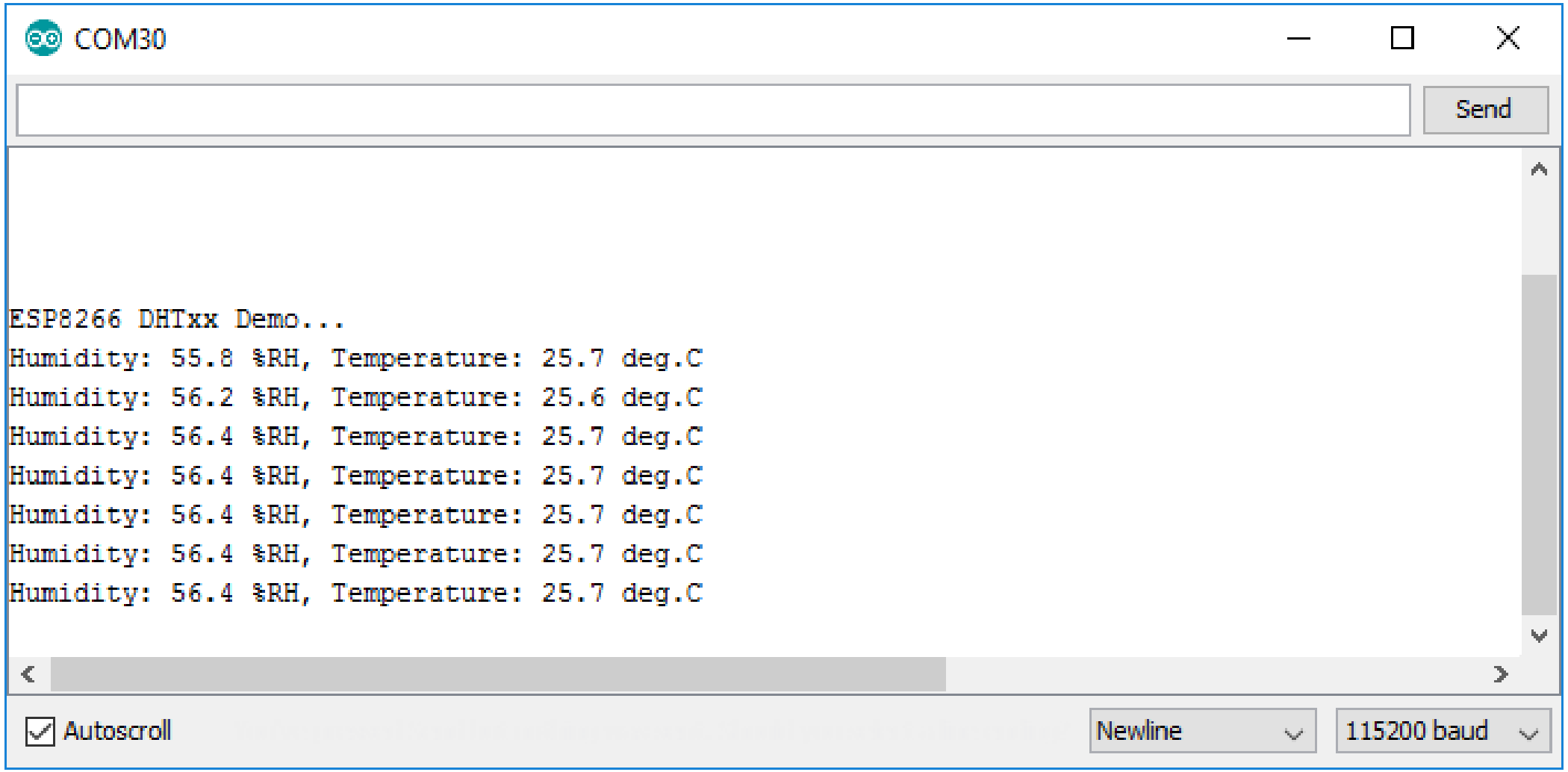

esp8266_dht11_lib_demo-2

```
#include <ESP8266WiFi.h>
#include "PubSubClient.h"
#include "DHT.h"

#define DHTPIN D4     // what pin we're connected to

// Uncomment whatever type you're using!
#define DHTTYPE DHT11   // DHT 11
//#define DHTTYPE DHT22   // DHT 22  (AM2302)
//#define DHTTYPE DHT21   // DHT 21 (AM2301)

DHT dht(DHTPIN, DHTTYPE);
```

esp8266_dht11_lib_demo-2

```
void setup() {
  Serial.begin(115200);
  Serial.println("DHTxx test!");
  setup_wifi();
  client.setServer(mqtt_server, mqtt_port);
  dht.begin();
  sprintf(temperature_topic, "/esp8266/%d/temperature", esp_id);
  sprintf(humidity_topic, "/esp8266/%d/humidity", esp_id);
}
```

esp8266_dht11_lib_demo-2

```
void loop() {
  if (!client.connected()) {
    reconnect();
  }
  client.loop();
  long now = millis();
  if (now - lastMsg > 5000) {
    lastMsg = now;
  // Reading temperature or humidity takes about 250 milliseconds!
  // Sensor readings may also be up to 2 seconds 'old' (its a very slow sensor)
    float newHum = dht.readHumidity();
    float newTemp = dht.readTemperature();
    Serial.print("New temperature:");    Serial.println(String(newTemp).c_str());
    client.publish(temperature_topic, String(newTemp).c_str(), true);
    Serial.print("New humidity:");    Serial.println(String(newHum).c_str());
    client.publish(humidity_topic, String(newHum).c_str(), true);
 }
}
```

ใช้งาน Freeboard เรียกดูค่า DHT11

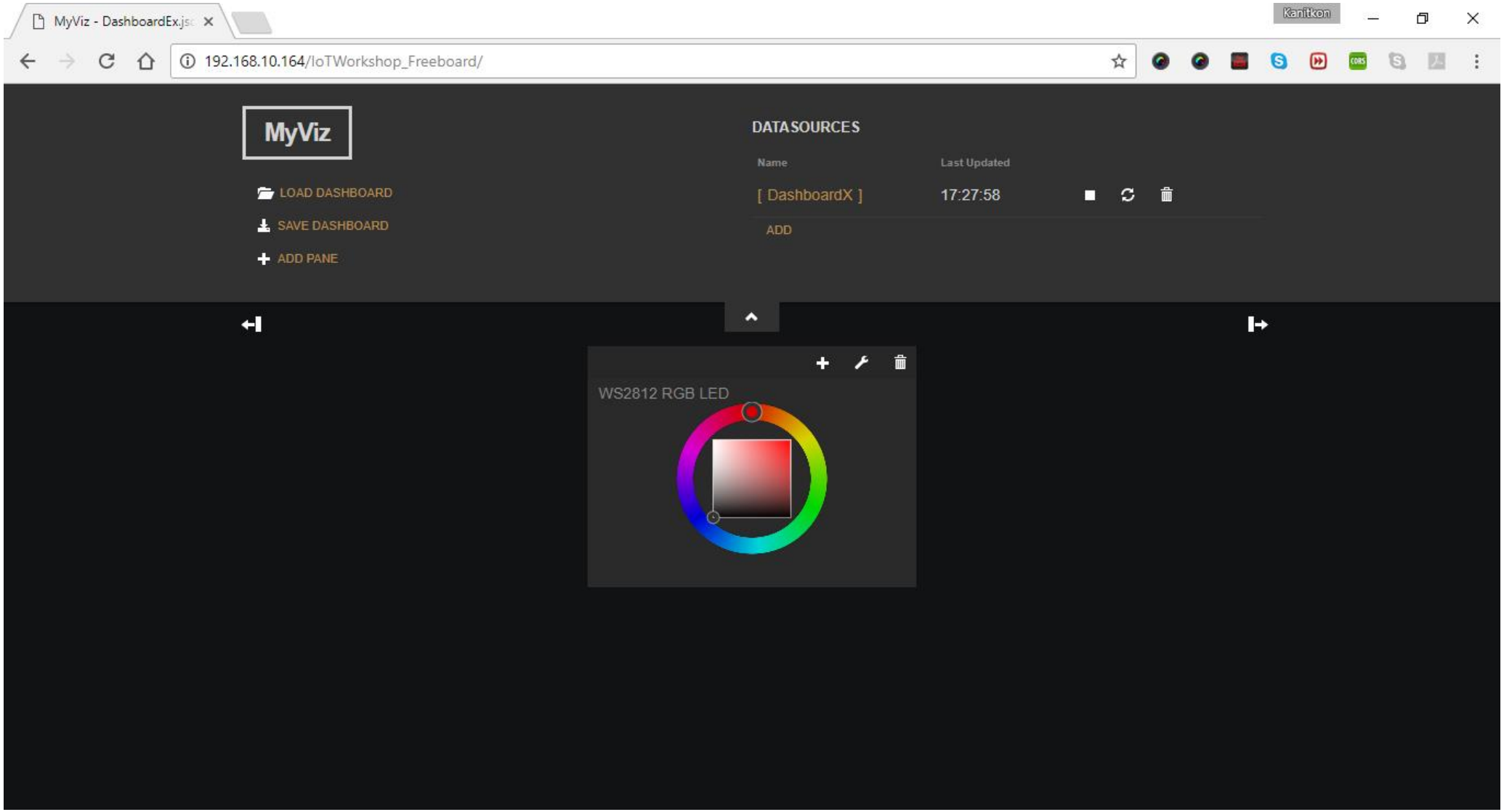

ใช้งาน Freeboard เรียกดูค่า DHT11

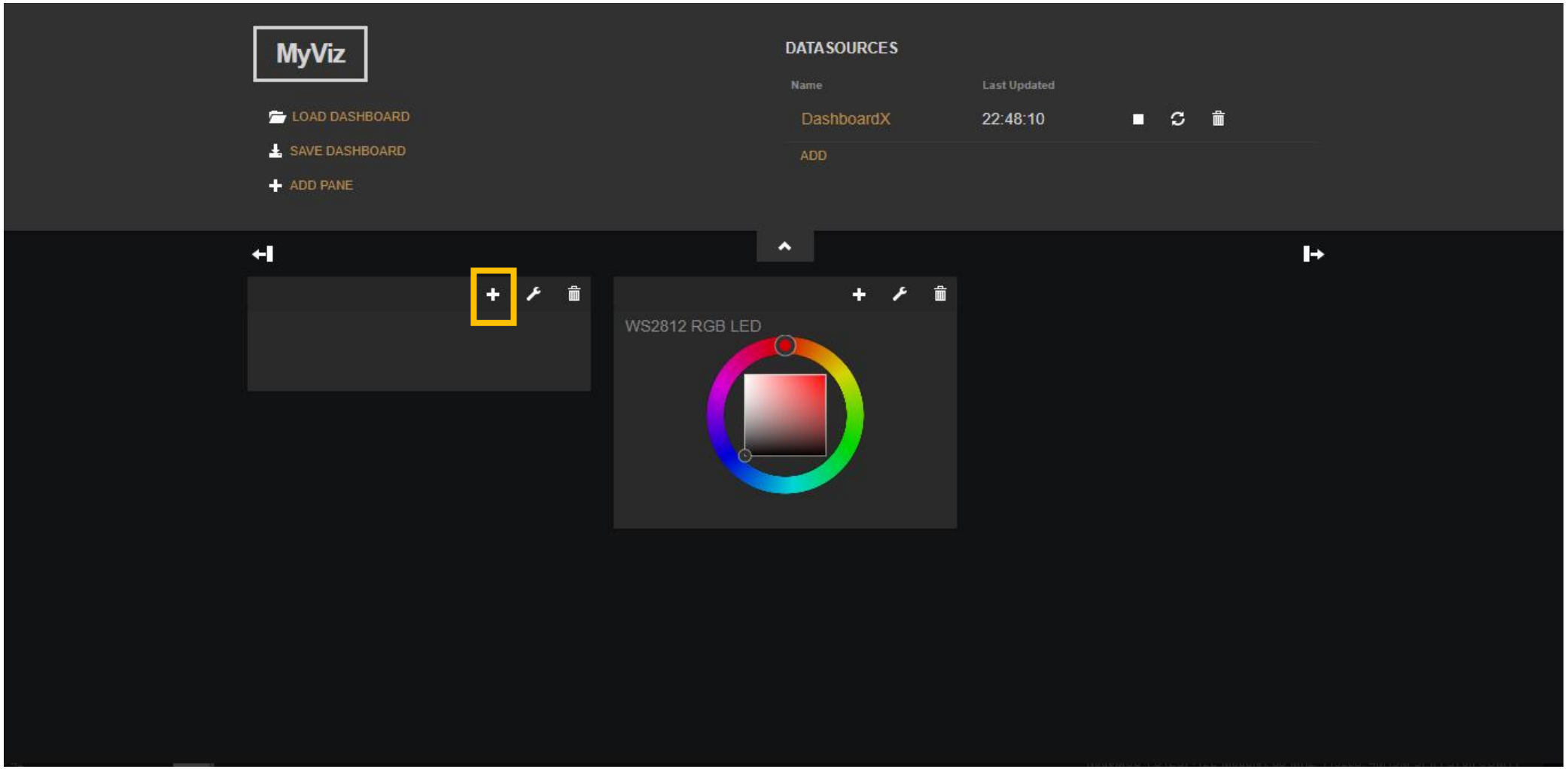

ใช้งาน Freeboard เรียกดูค่า DHT11

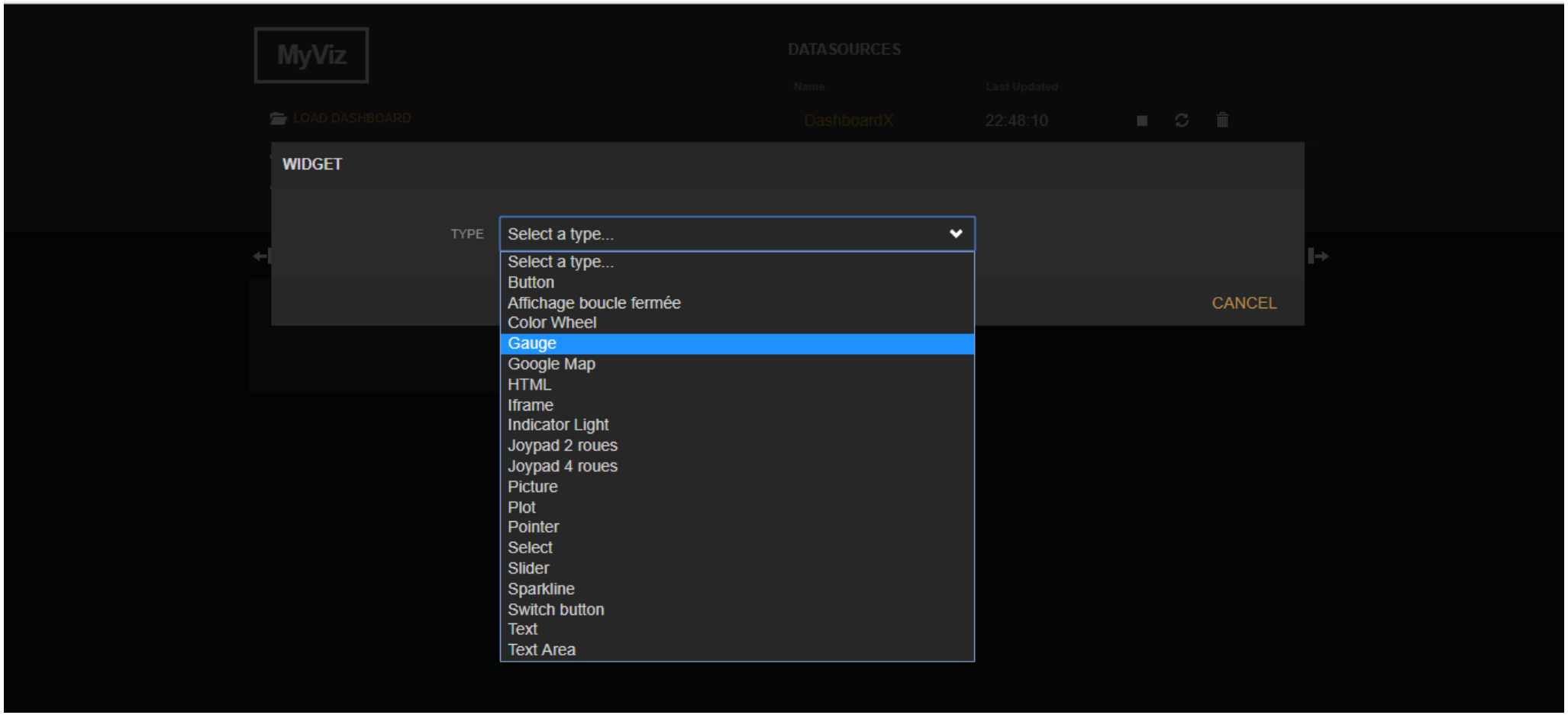

ใช้งาน Freeboard เรียกดูค่า DHT11

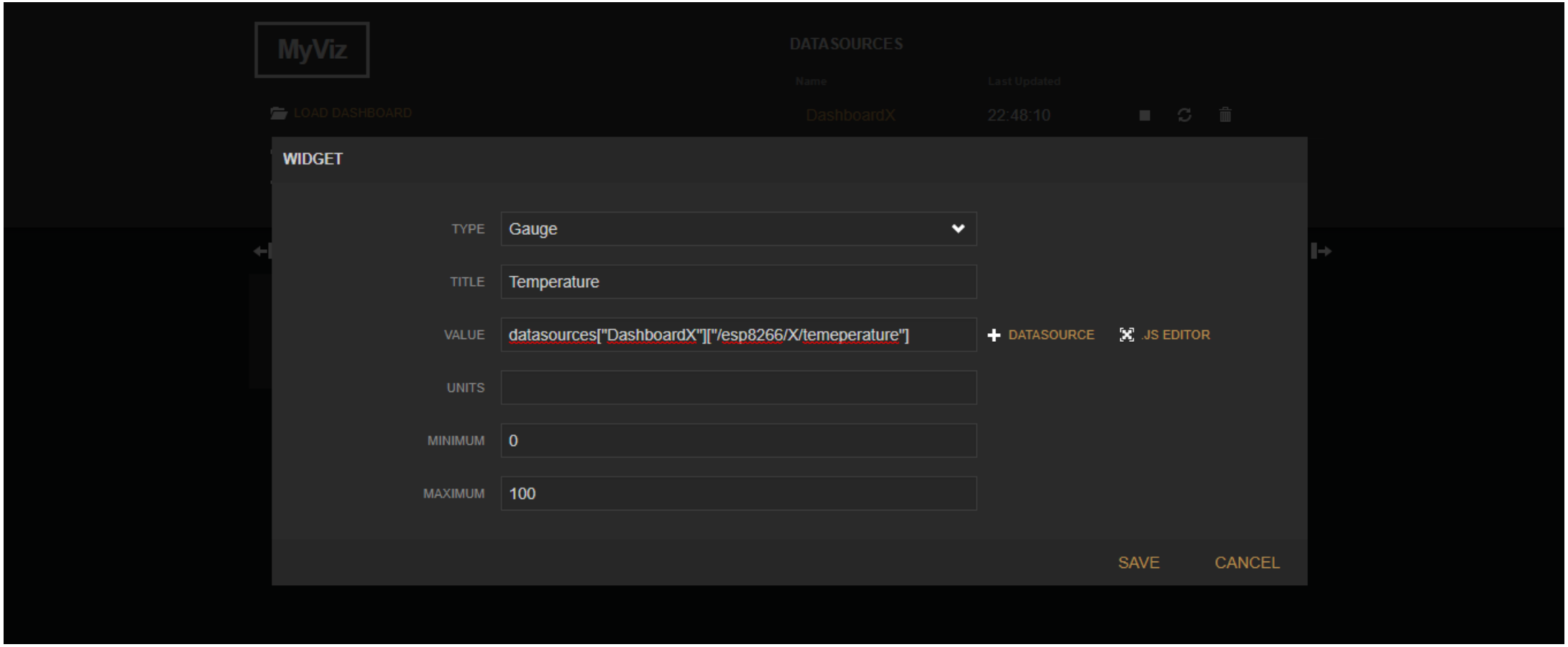

ใช้งาน Freeboard เรียกดูค่า DHT11

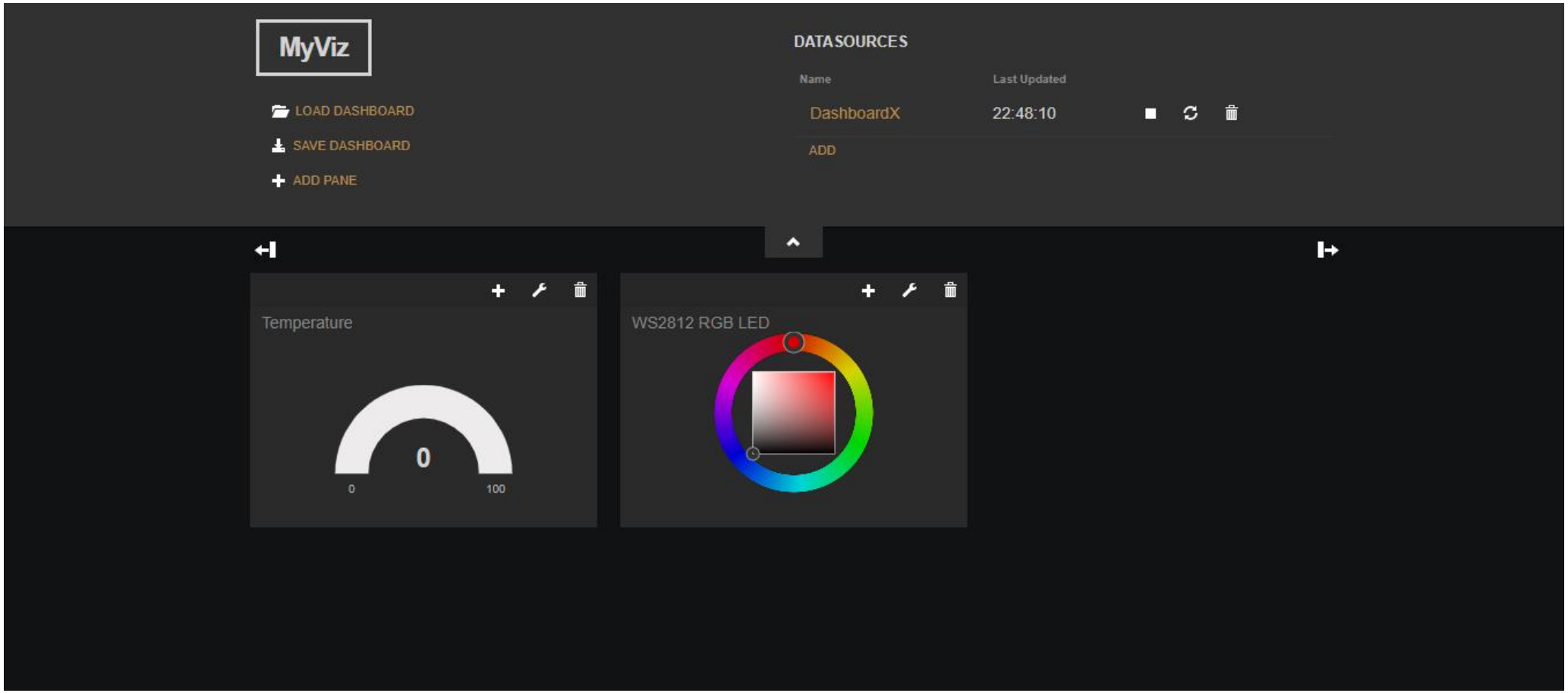

BH1750 Module

ที่มา : https://goo.gl/G74yWP

- โมดูลวัดความเข้มแสง
- เชื่อมต่อแบบ I2C
- แรงดันไฟเลี้ยงในช่วง 2.4V - 3.6V
- ความละเอียด: 16 บิต ได้ค่า 1-65536 หน่วยเป็น Lux (step: 0.5 Lux, 1 Lux, หรือ 4 Lux ขึ้นอยู่กับโหมดการวัดที่เลือก)
- ระยะเวลาในการวัดแต่ละครั้ง: ประมาณ 120 msec (สำหรับ 0.5 Lux หรือ 1 Lux), 16 msec (สำหรับ 4 Lux) ขึ้นอยู่กับโหมดการวัดที่เลือก

NodeMCU BH1750 Wiring Diagram

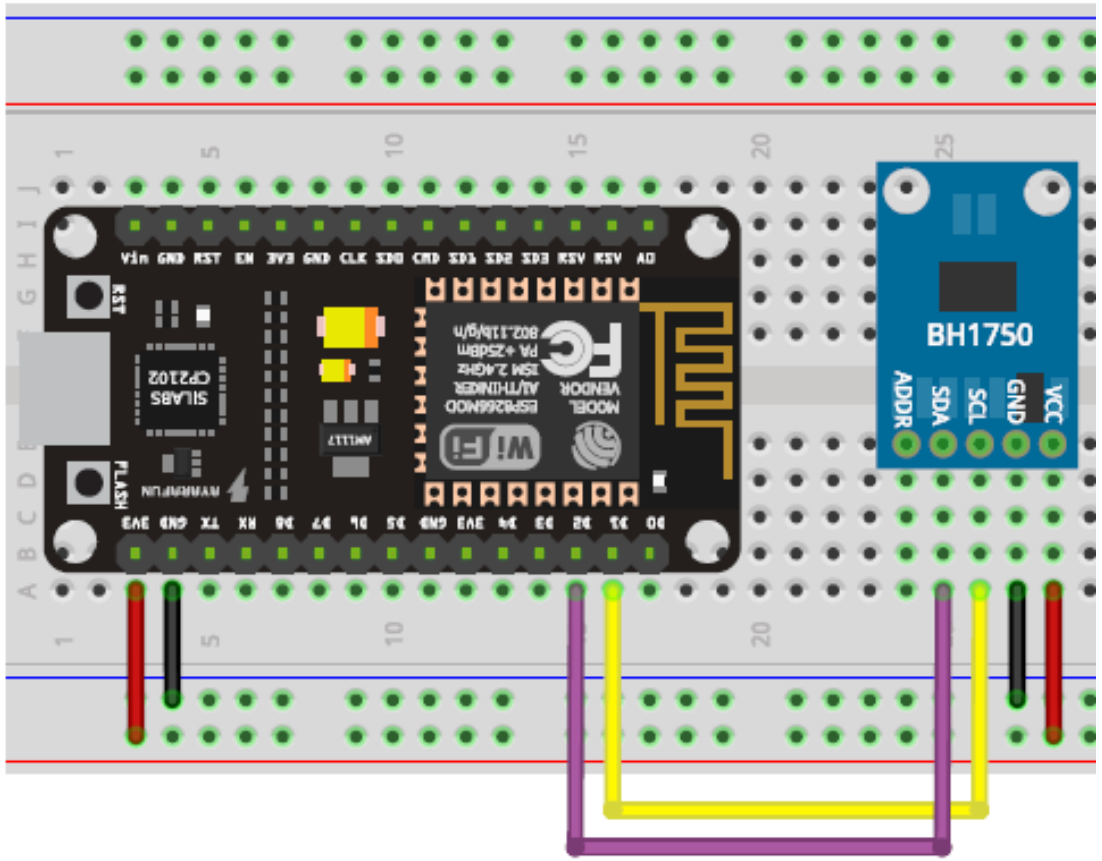

WeMos BH1750 Wiring Diagram

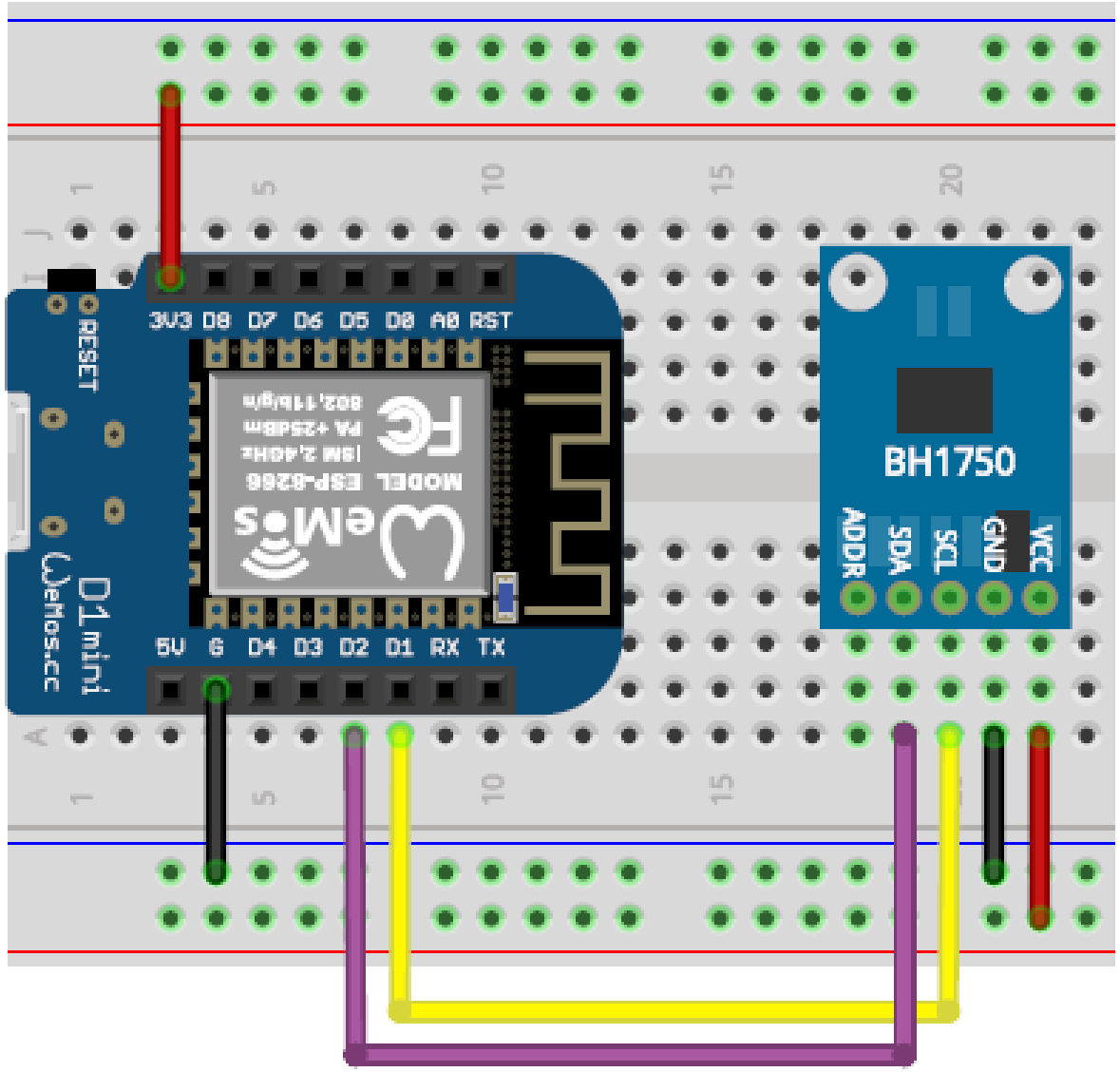

esp8266_bh1750_lib_demo-1

```
#include <Wire.h>
#include "BH1750.h"            // -> https://github.com/claws/BH1750

#define LED_PIN        (D4)    // D4 pin (GPIO-2)
#define SDA_PIN        (D2)    // D2 pin (GPIO-4)
#define SCL_PIN        (D1)    // D1 pin (GPIO-5)

#define DEV_ADDR       (0x23)  // set the I2C device address (BH1750)

#define INTERVAL_MSEC  (1000)  // update interval: 1 sec

BH1750 bh( DEV_ADDR );         // create BH1750 object

// global variables
char sbuf[64];                 // char buffer for sprintf()
uint32_t ts;                   // used to save timestamp
```

esp8266_bh1750_lib_demo-1

```
void setup() {
  pinMode( LED_PIN, OUTPUT );
  digitalWrite( LED_PIN, LOW );
  Serial.begin( 115200 );

  for ( int i=0; i < 10; i++ ) {
    delay(100);
    Serial.println();
  }
  Serial.flush();

  Serial.println( F("BH1750 Sensor Reading...") );
  bh.begin( BH1750_CONTINUOUS_HIGH_RES_MODE,
            SDA_PIN, SCL_PIN, 400000 /* set I2C frequency */ );
  ts = millis();
}
```

esp8266_bh1750_lib_demo-1

```
void process() {
  uint16_t lux = bh.readLightLevel();  // read the sensor value

  String str;
  str += "Light: ";
  dtostrf( lux, 6, 1, sbuf );
  str += sbuf;
  str += " Lux";

  Serial.println( str.c_str() );
}

void loop() {
  if ( millis() - ts >= INTERVAL_MSEC ) {
     ts += INTERVAL_MSEC;
     digitalWrite( LED_PIN, HIGH );
     process();
     digitalWrite( LED_PIN, LOW );
  }
  delay(1); // delay for 1 msec
}
```

esp8266_bh1750_lib_demo-1

COM30

Send

```
BH1750 Sensor Reading...
Light:  545.0 Lux
Light:  548.0 Lux
Light:  546.0 Lux
Light:  545.0 Lux
Light:  546.0 Lux
Light:  544.0 Lux
Light:  544.0 Lux
Light:  543.0 Lux
Light:  541.0 Lux
Light:  542.0 Lux
Light:  540.0 Lux
```

Autoscroll

Newline

115200 baud

esp8266_bh1750_lib_demo-2

```
#include <Wire.h> // use the Wire library
#include "BH1750.h"             // https://github.com/claws/BH1750
#include <ESP8266WiFi.h>
#include "PubSubClient.h"

#define I2C_SCL_PIN       (D1)    // D1 pin (GPIO-5
#define I2C_SDA_PIN       (D2)    // D2 pin (GPIO-4
#define I2C_BH1750_ADDR       (0x23)

BH1750 bh( I2C_BH1750_ADDR );

char sbuf[64];
uint32_t ts;
```

esp8266_bh1750_lib_demo-2

```
void setup() {
  // put your setup code here, to run once:
  Serial.begin( 115200 );
  Serial.println( "\n\n\n" );

  setup_wifi();
  client.setServer(mqtt_server, mqtt_port);

  Wire.begin( I2C_SDA_PIN, I2C_SCL_PIN );
  delay(1000);
  i2c_scan();
  delay(1000);

  bh.begin( BH1750_CONTINUOUS_HIGH_RES_MODE, I2C_SDA_PIN, I2C_SCL_PIN, 400000 );

  Serial.print( "Light Intensity" );
  ts = millis();
}
```

esp8266_bh1750_lib_demo-2

```
void loop() {
  // put your main code here, to run repeatedly:
  if (!client.connected()) {
    reconnect();
  }
  client.loop();

  if ( millis() - ts >= INTERVAL_MSEC ) {
     char val_str[8];
     ts += INTERVAL_MSEC;

     uint16_t lux = bh.readLightLevel();
     dtostrf( lux, 6, 1, val_str );

     char light_topic[64];
     sprintf(light_topic, "/esp8266/%d/light", esp_id);
     sprintf( sbuf, "     %s Lux", val_str );      Serial.println( sbuf );
     client.publish(light_topic, val_str, true);
  }
  delay(1);
}
```

ใช้งาน Freeboard เรียกดูค่า BH1750

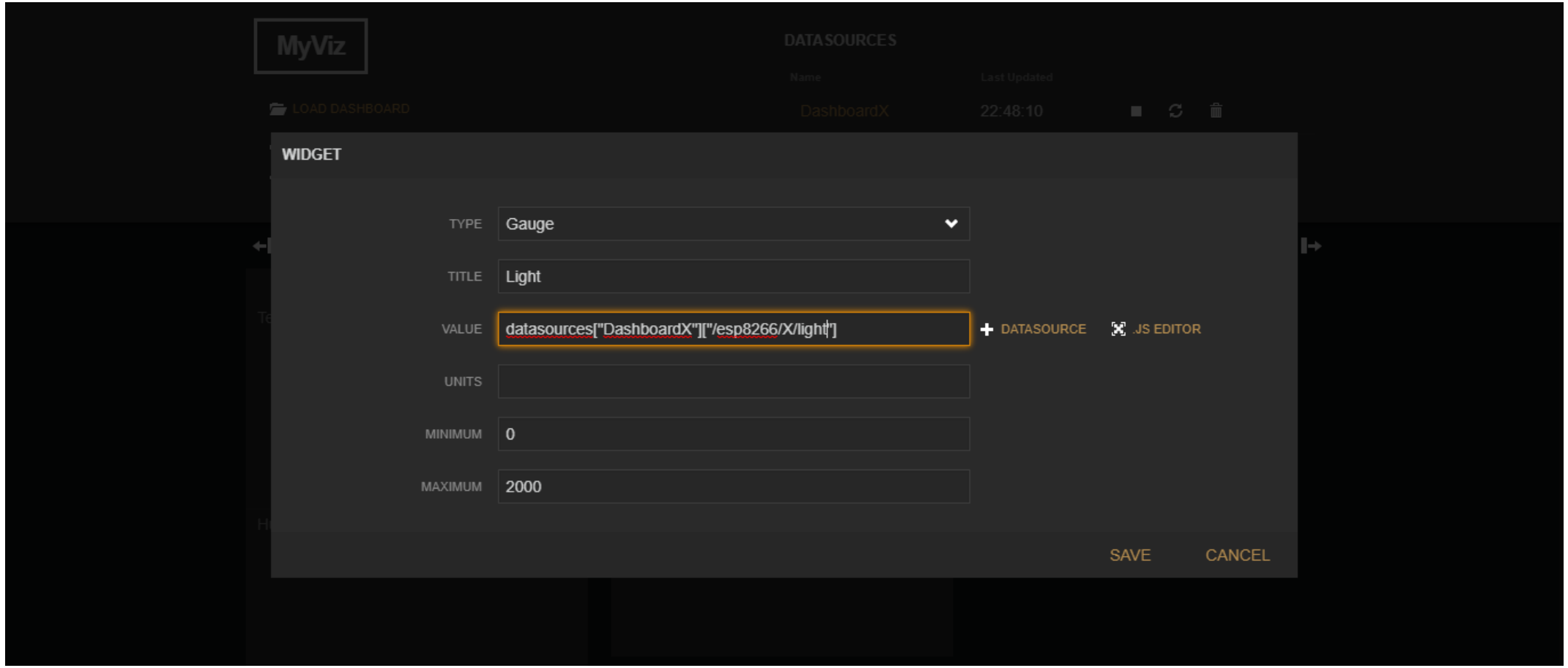

Ultrasonic Module HC-SR04+

- โมดูลวัดระยะห่างโดยใช้คลื่นเสียง
- 3.3V power and I/O
- ช่วงในการวัดที่ 2-400 cm

ที่มา : https://goo.gl/5tUDuq

NodeMCU Ultrasonic Wiring Diagram

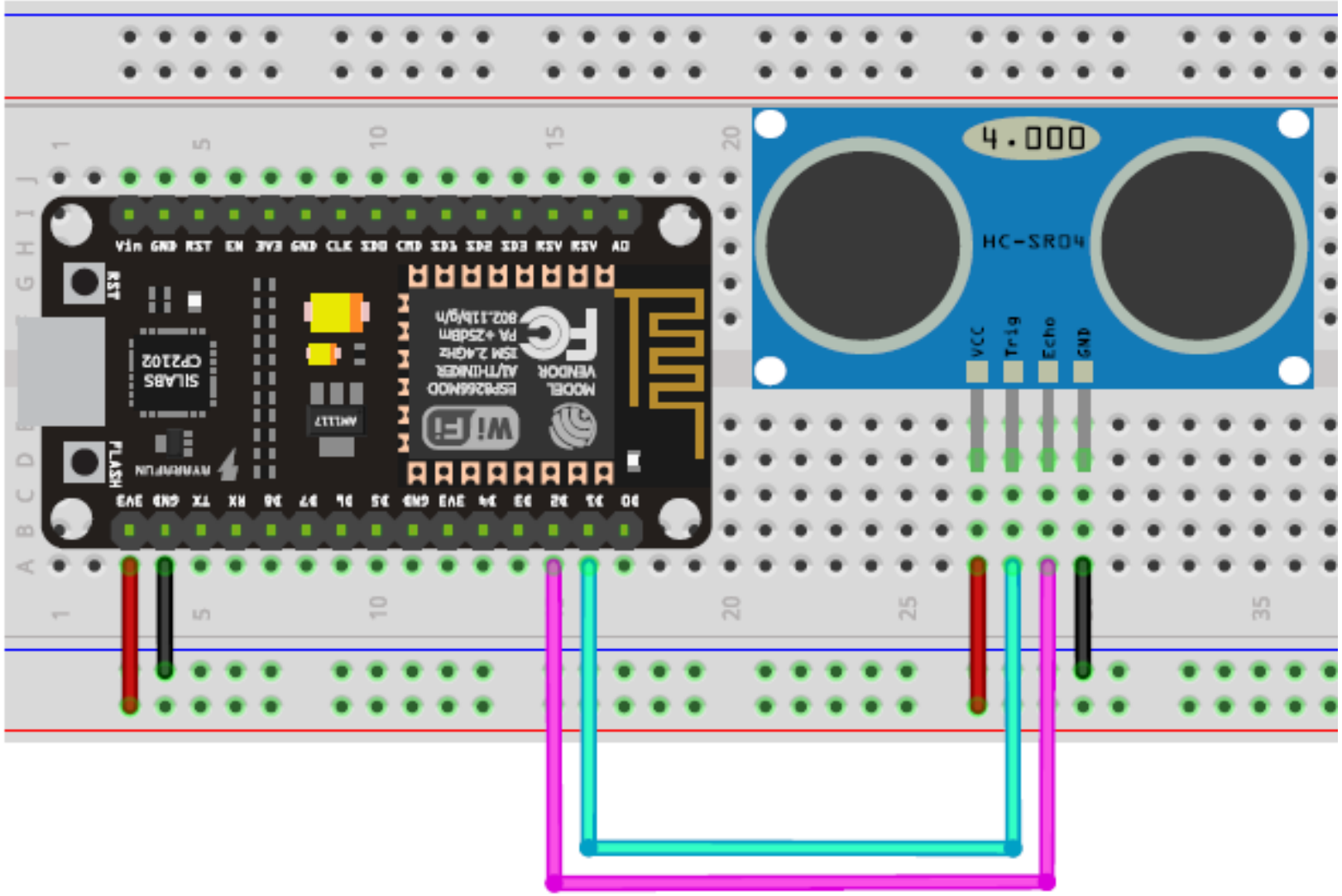

WeMos Ultrasonic Wiring Diagram

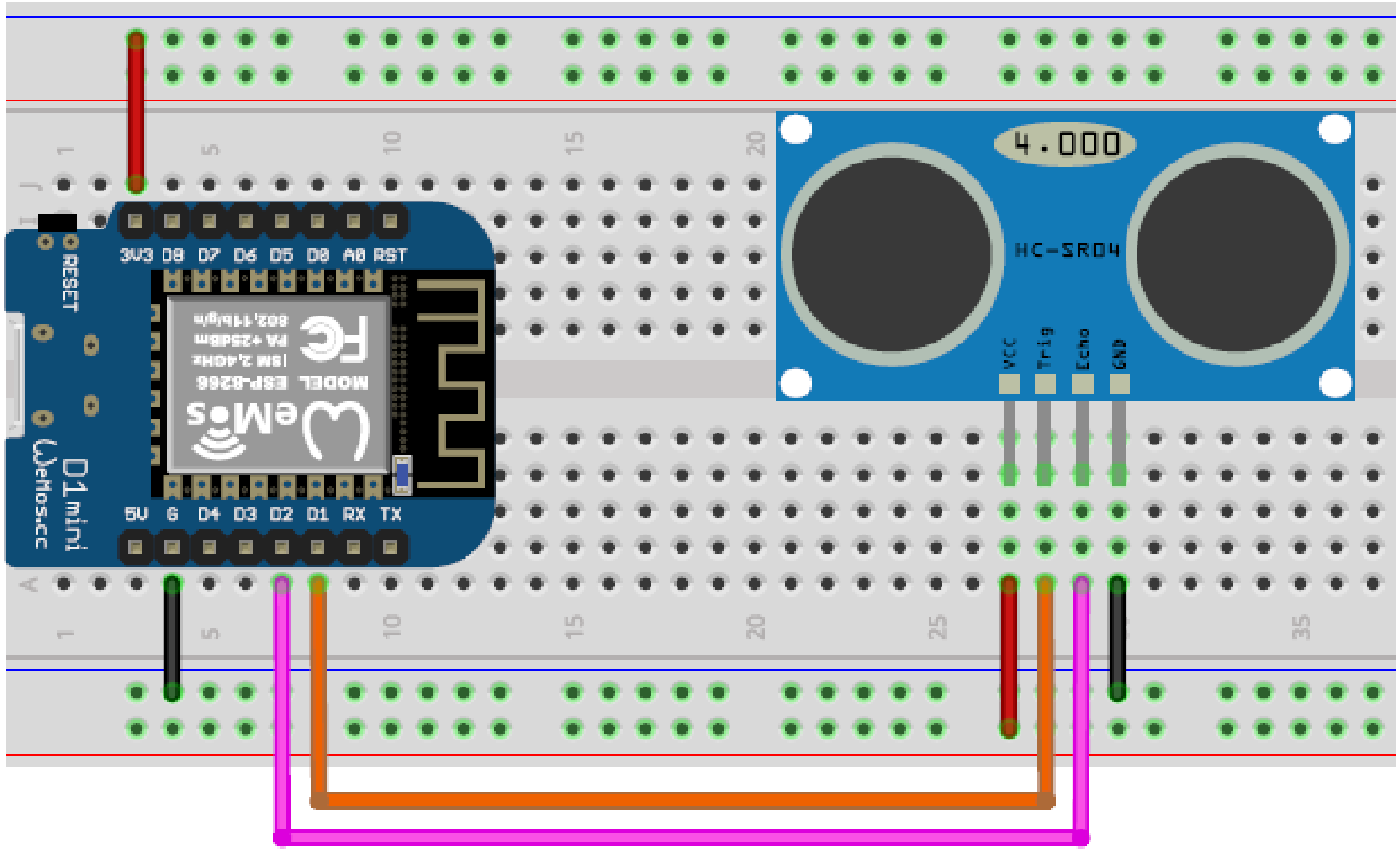

esp8266_ultrasonic_sr04p_demo-1

```
#define TRIG_PIN    5     // GPIO-5 / D1 pin
#define ECHO_PIN    4     // GPIO-4 / D2 pin

const uint32_t timeout_usec = 40000;      // timeout in microseconds
const uint32_t sound_speed  = 34300;      // in centimeters/second

String str;

void setup() {
   Serial.begin( 115200 );
   Serial.println( F("\n\n\n") );
   delay(100);
   Serial.println( F("ESP8266 Ultrasonic SR04+ Demo...") );
   pinMode( ECHO_PIN, INPUT  );
   pinMode( TRIG_PIN, OUTPUT );
}
```

esp8266_ultrasonic_sr04p_demo-1

```
void loop() {
  // send a PING signal (a short-pulse signal on TRIG pin)
  digitalWrite( TRIG_PIN, HIGH );
  delayMicroseconds( 20 );
  digitalWrite( TRIG_PIN, LOW );

  // see: https://www.arduino.cc/en/Reference/pulseIn
  uint32_t duration = pulseIn( ECHO_PIN, HIGH, timeout_usec );
  str = F("Duration: ");
  str += duration;
  str += F(" usec, ");
  str += F("Distance: ");
  str += (sound_speed * duration / 1000000) / 2;
  str += F(" cm");
  Serial.println( str );

  delay(500);
}
```

esp8266_ultrasonic_sr04p_demo-1

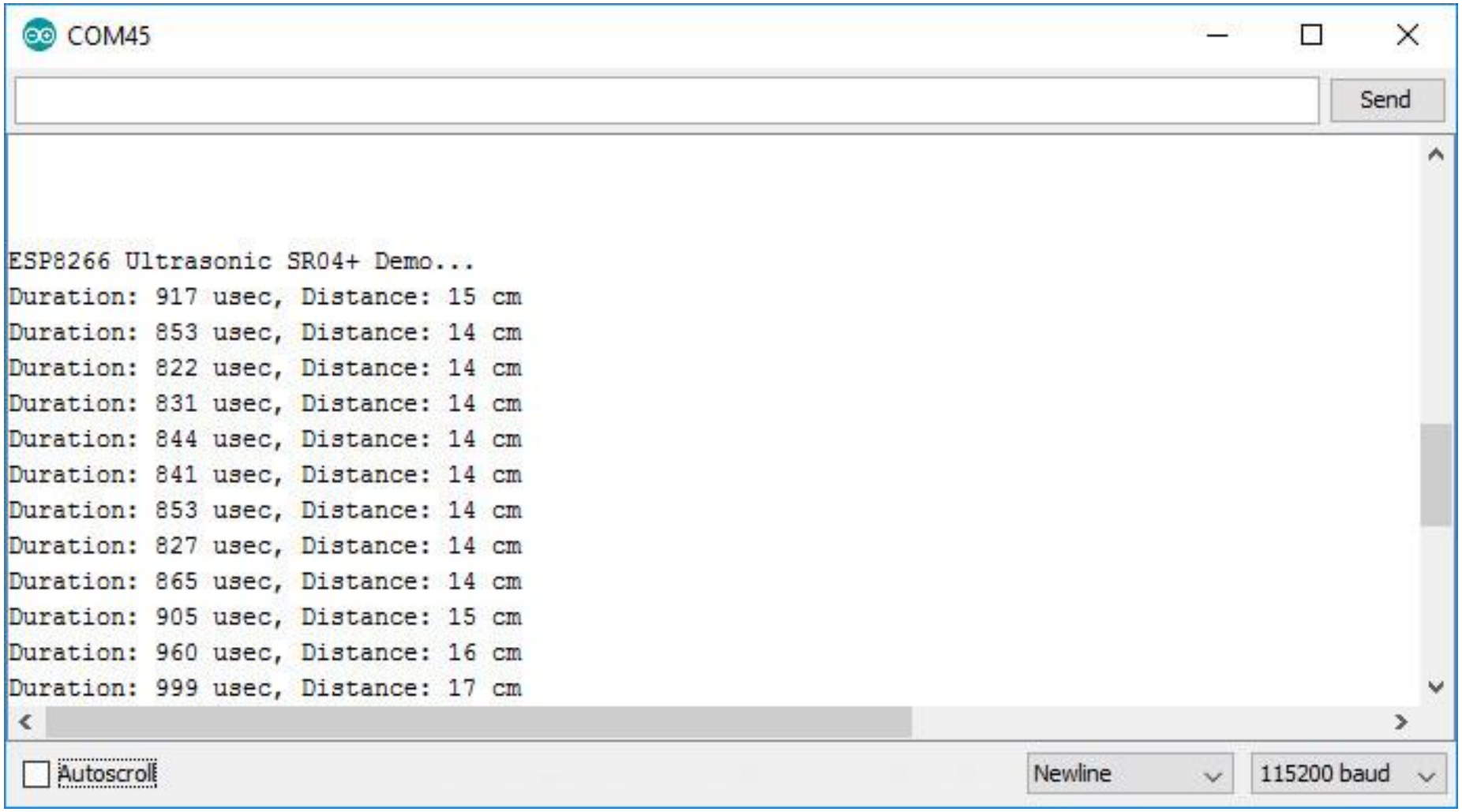

esp8266_ultrasonic_sr04p_demo-2

```
void setup() {
  Serial.begin(115200);
  pinMode( ECHO_PIN,  INPUT  );
  pinMode( TRIG_PIN,  OUTPUT );
  setup_wifi();
  client.setServer(mqtt_server, mqtt_port);
}

uint32_t read_distance() {
   // send a PING signal (a short-pulse signal on TRIG pin)
   digitalWrite( TRIG_PIN, HIGH );
   delayMicroseconds( 20 );
   digitalWrite( TRIG_PIN, LOW );
   // see: https://www.arduino.cc/en/Reference/pulseIn
   // measure pulse width of the ECHO signal
   uint32_t duration = pulseIn( ECHO_PIN, HIGH, timeout_usec );
   uint32_t distance_cm = (sound_speed * duration / 1000000) / 2;
   return distance_cm;
}
```

esp8266_ultrasonic_sr04p_demo-2

```
void loop() {
  if (!client.connected()) {
    reconnect();
  }
  client.loop();

  long now = millis();
  if (now - lastMsg > 500) {
    lastMsg = now;

    char distance[64];
    sprintf(distance, "/esp8266/%d/distance", esp_id);

    uint32_t newDistance = read_distance();
    Serial.print("New distance:");    Serial.println(String(newDistance).c_str());
    client.publish(distance, String(newDistance).c_str(), true);
 }
}
```

LCD 16x2 i2c Display Module

- โมดูลแสดงข้อความขนาด 16 ตัวอักษร 2 แถว
- มีการเชื่อมต่อแบบ i2c โดยใช้โมดูลที่ใช้ไอซี PCF8574

ที่มา : https://goo.gl/EcD6p2

NodeMCU LCD Wiring Diagram

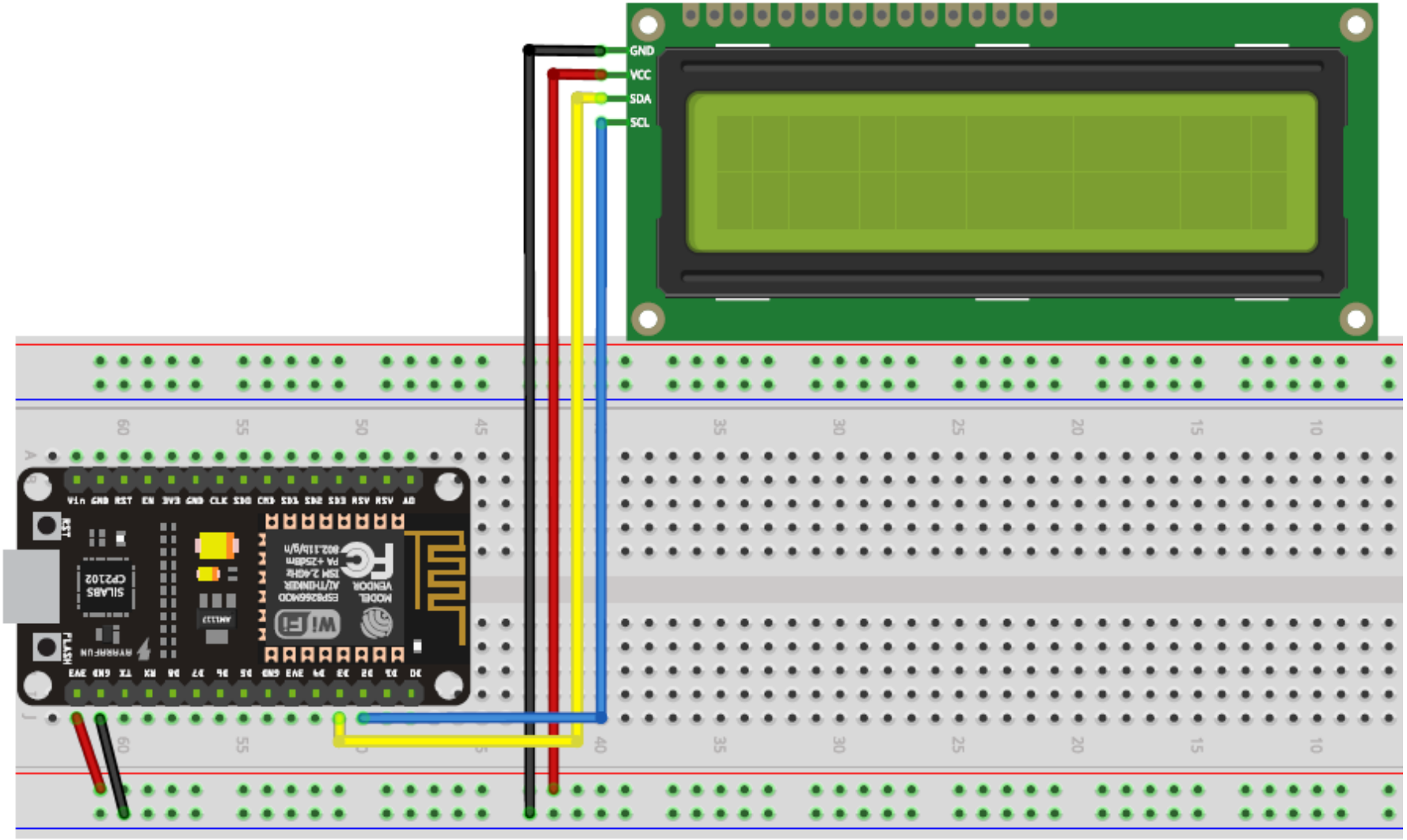

WeMos LCD Wiring Diagram

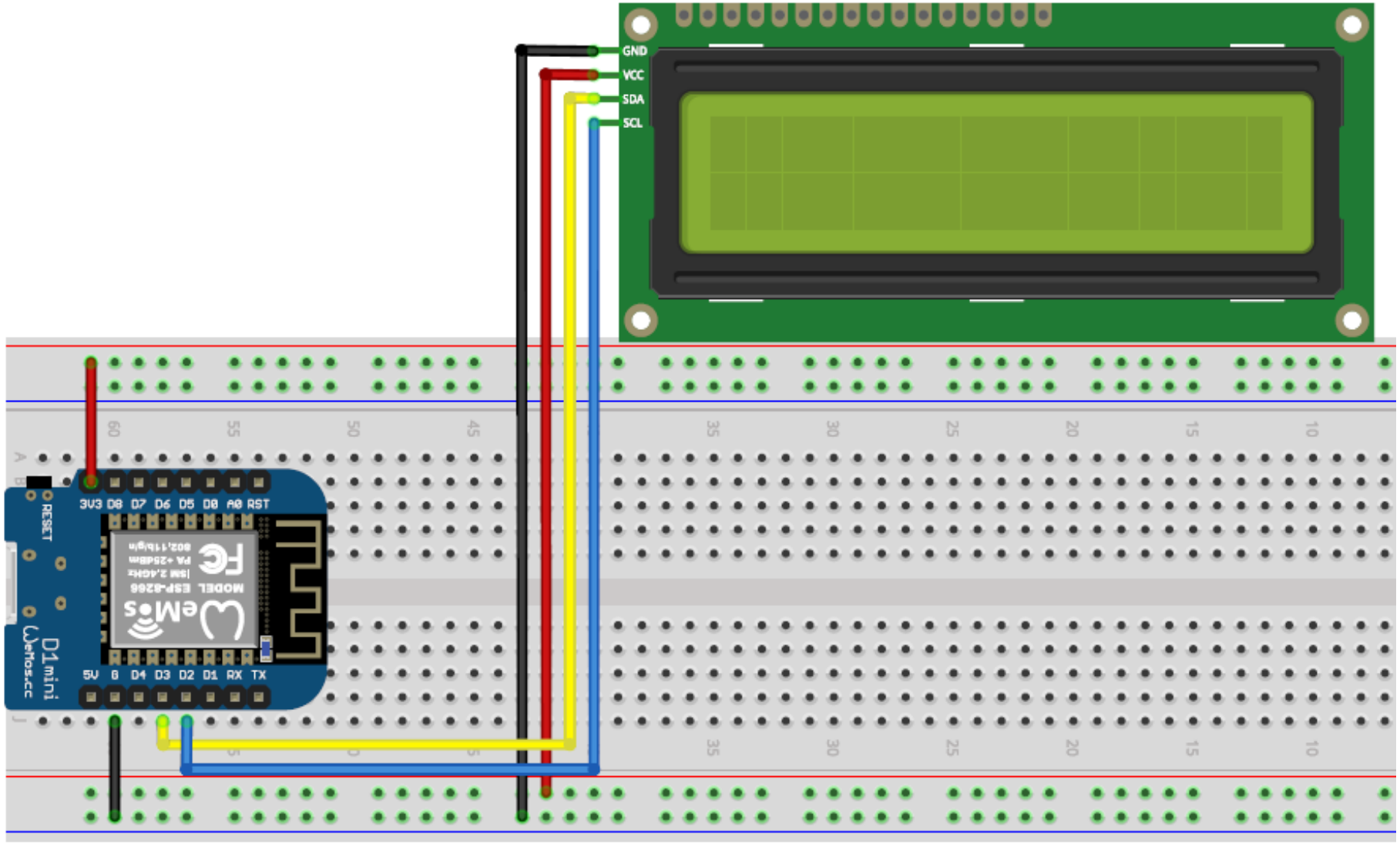

esp8266_pcf8574a_lcd_lib_demo-1

```
#include <Wire.h> // use the Wire library
#include "LiquidCrystal_I2C.h" // -> https://github.com/fdebrabander/Arduino-LiquidCrystal-I2C-library

#define I2C_SCL_PIN       (4)       // D2 pin (SCL / GPIO-4)
#define I2C_SDA_PIN       (0)       // D3 pin (SDA / GPIO-0)
#define I2C_ADDR          (0x3F)    // set the I2C address for PCF8574 LCD adapter (0x27 or 0x3F)

LiquidCrystal_I2C lcd( I2C_ADDR, 16, 2 ); // 16x2 LCD display, set I2C address

// global variables
char sbuf[64];   // used for sprintf()
uint32_t ts;     // used to save timestamp value

#define INTERVAL_MSEC  (1000)
```

esp8266_pcf8574a_lcd_lib_demo-1

```
void setup() {
  Serial.begin( 115200 );

  Wire.begin( I2C_SDA_PIN, I2C_SCL_PIN );
  delay(1000);
  i2c_scan();
  delay(1000);

  lcd.begin( I2C_SDA_PIN, I2C_SCL_PIN, 400000 );
  lcd.backlight();
  lcd.clear();
  lcd.setCursor(0,0); // set cursor at top-level position on the first row
  lcd.print( F("ESP8266 Demo") );
  lcd.setCursor(0,1); // set cursor at the start position on the second row
  lcd.print( F("ESL KMUTNB") );
  lcd.clear();
  lcd.setCursor(0,0); // set cursor at top-level position on the first row
  lcd.print( F("16x2 LCD Adapter") );
  delay(1000);
  ts = millis();
}
```

esp8266_pcf8574a_lcd_lib_demo-1

```
uint16_t count = 0;

void loop() {
  if ( millis() - ts >= INTERVAL_MSEC ) {
     ts += INTERVAL_MSEC;
     sprintf_P( sbuf, PSTR("Count: %04u"), count );
     count = (count+1) % 10000;
     lcd.setCursor(0 /*col*/, 1 /*row*/);
     lcd.print( sbuf );
     Serial.println( sbuf );
  }
  delay(1);
}
```

esp8266_pcf8574a_lcd_lib_demo-1

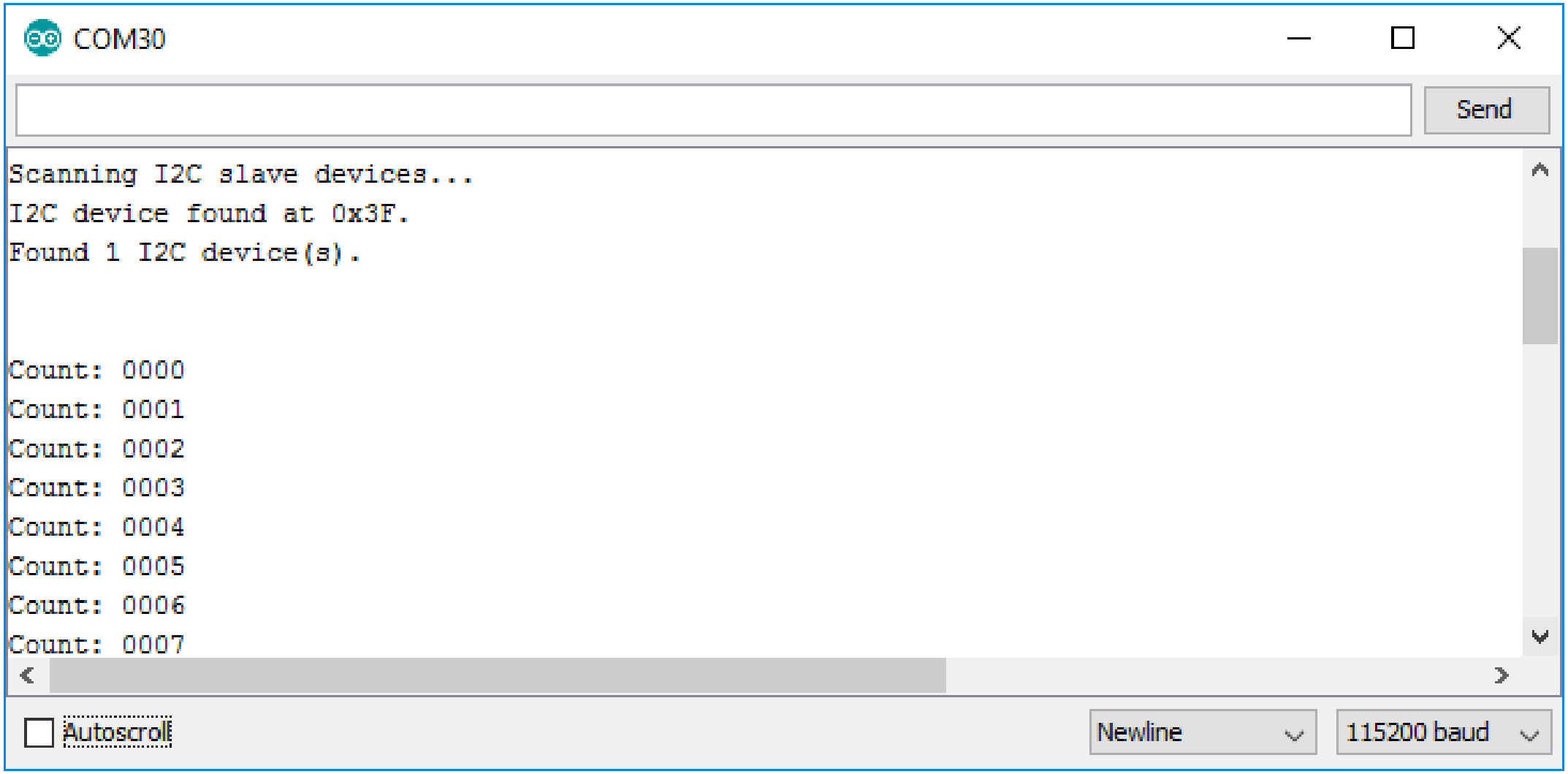

esp8266_pcf8574a_lcd_lib_demo-2

```
#include <ESP8266WiFi.h>
#include "PubSubClient.h"
#include <Wire.h> // use the Wire library
#include "LiquidCrystal_I2C.h" // -> https://github.com/fdebrabander/Arduino-LiquidCrystal-I2C-library

#define I2C_SCL_PIN       (4)       // D2 pin (SCL / GPIO-4)
#define I2C_SDA_PIN       (0)       // D3 pin (SDA / GPIO-0)
#define I2C_ADDR          (0x3F)    // set the I2C address for PCF8574 LCD adapter (0x27 or 0x3F)

LiquidCrystal_I2C lcd( I2C_ADDR, 16, 2 ); // 16x2 LCD display, set I2C address

// global variables
char sbuf[64];   // used for sprintf()
uint32_t ts;     // used to save timestamp value

#define INTERVAL_MSEC  (1000)
```

esp8266_pcf8574a_lcd_lib_demo-2

```
void setup() {
  Serial.begin( 115200 );

  setup_wifi();
  client.setServer(mqtt_server, mqtt_port);
  client.setCallback(callback);

  Wire.begin( I2C_SDA_PIN, I2C_SCL_PIN );
  delay(1000);
  i2c_scan();
  delay(1000);

  lcd.begin( I2C_SDA_PIN, I2C_SCL_PIN, 400000 );
  lcd.backlight();
  lcd.clear();
  lcd.setCursor(0,0); // set cursor at top-level position on the first row
  lcd.print( F("IoT Workshop") );
  delay(1000);
  ts = millis();
}
```

esp8266_pcf8574a_lcd_lib_demo-2

```
void loop() {
  connectCloudMQTT();
  if( millis() - ts >= INTERVAL_MSEC){
    ts += INTERVAL_MSEC;
    if (count_scroll%(text.length()+16) == 0){
      lcd.clear();
      lcd.setCursor(16,0); // set cursor at top-level position on the first row
      lcd.print(text);
    }else{
      lcd.scrollDisplayLeft();
    }
    count_scroll++;
  }
}
```

esp8266_pcf8574a_lcd_lib_demo-2

```
void callback(char* topic, byte* payload, unsigned int length) {
  const char s[2] = "/";
  char *token;
  token = strtok(topic, s);
  token = strtok(NULL, s);
  token = strtok(NULL, s);
  if(!strcmp(token, "text")){
    payload[length] = '\0';
    text = String((char*)payload);
    Serial.println(text);
  }
}
```

ใช้งาน Freeboard ส่งข้อความแสดงที่ LCD

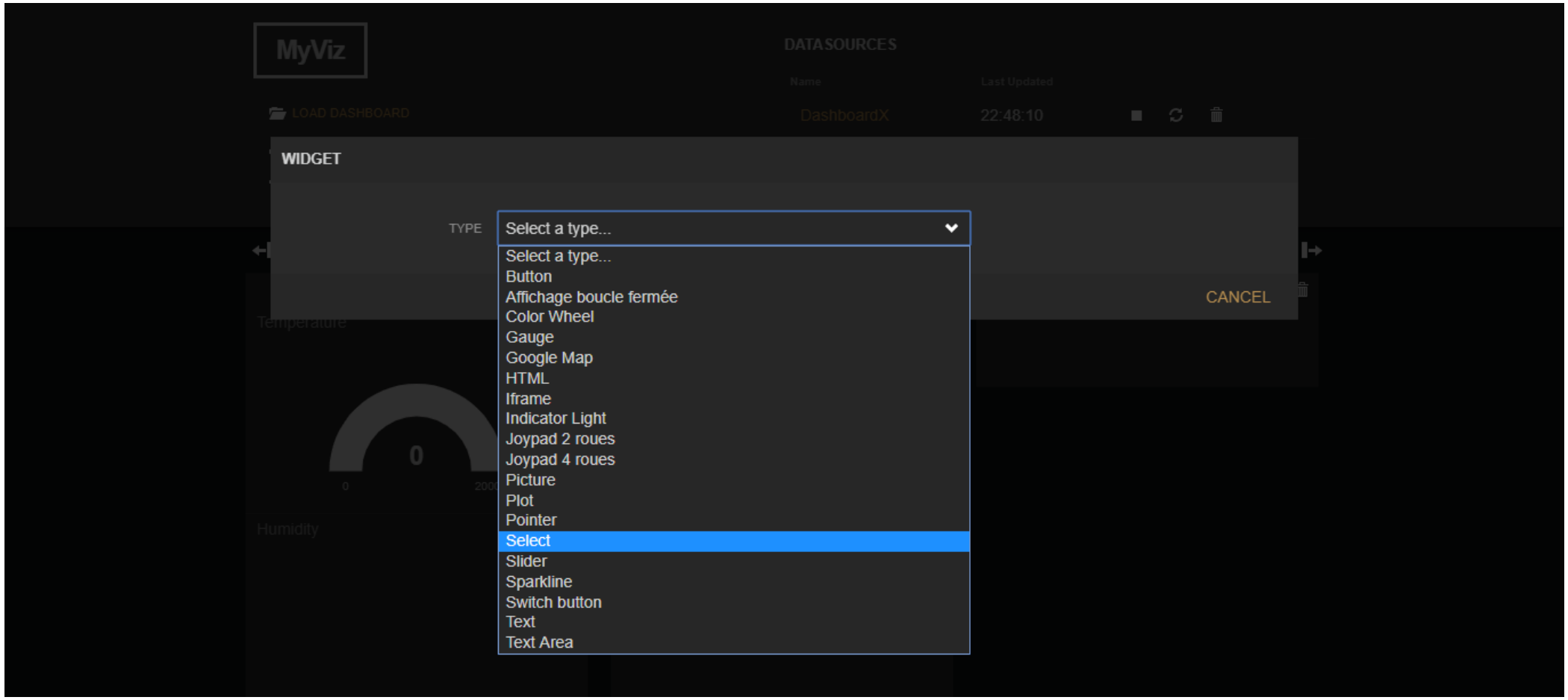

ใช้งาน Freeboard ส่งข้อความแสดงที่ LCD

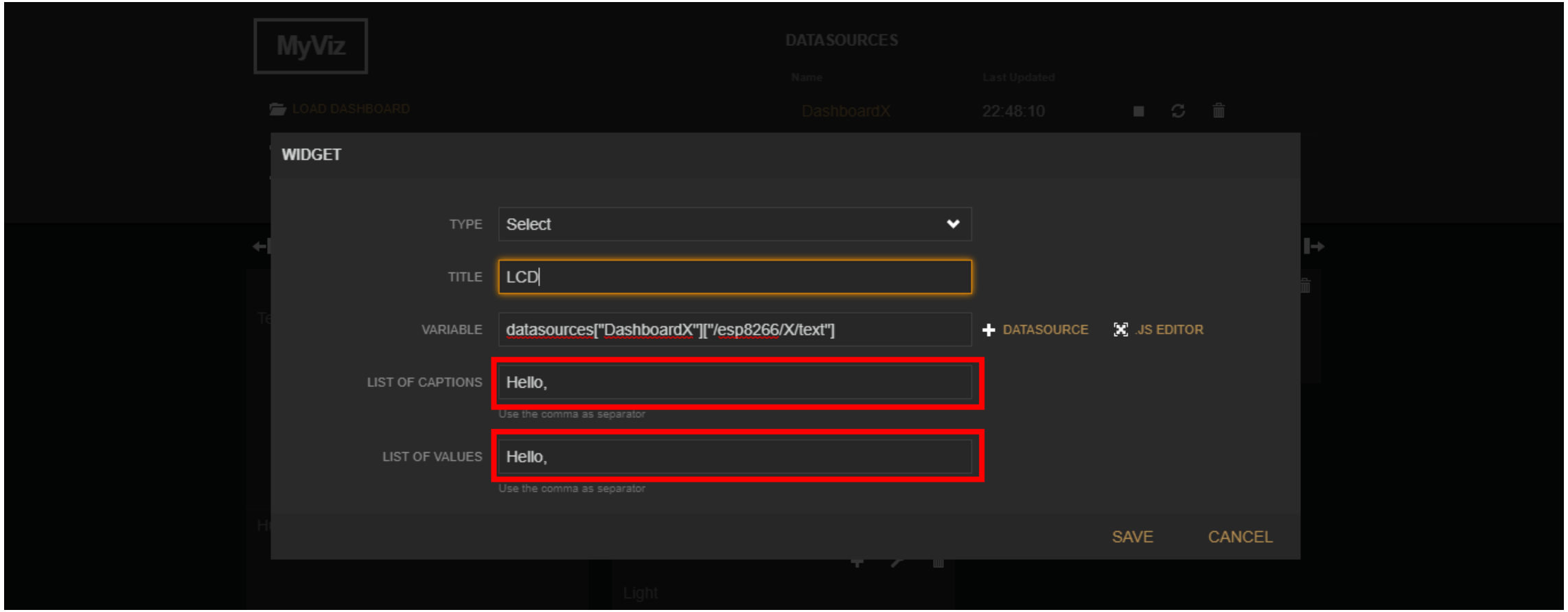

ใช้งาน Freeboard ส่งข้อความแสดงที่ LCD