# PHYS102/Fall 2021-2022 Midterm

PHYSICS 102 NO: _____

NAME: _____

**(On my honor I have neither given nor received any unauthorized assistance on this exam.)**

- This exam is out of 100 points for 4 problems.
- Duration is 100 minutes.
- This is a closed-book/notes/calculator/laptop exam.
- Read the questions carefully and write down your solutions in the space provided neatly and clearly.
- **Answers without work shown or proper explanation will not be given any credit.**.

| P1 | P2 | P3 | P4 | Total |
|---|---|---|---|---|
| | | | | |

# Formula Sheet

**Coulomb's law:**

$$F = \frac{1}{4\pi\epsilon_0}\frac{|q_1 q_2|}{r^2}$$

$$\frac{1}{4\pi\epsilon_0} = 9 \times 10^9 \ \mathrm{N \cdot m^2/C^2}$$

**Electric field:**

$$\vec{E} = \frac{\vec{F}}{q_0}$$

$$\epsilon_0 = 9 \times 10^{-12} \ \mathrm{C^2/N \cdot m^2}$$

**Electric flux:**

$$\Phi_E = \int E \cos\phi \, dA = \int \vec{E} \cdot d\vec{A}$$

**Gauss's law:**

$$\Phi_E = \oint \vec{E} \cdot d\vec{A} = \frac{Q_{\mathrm{enc}}}{\epsilon_0}$$

**Electric potential energy:**

$$U = \frac{q_0}{4\pi\epsilon_0}\sum_i \frac{q_i}{r_i}$$

$$\vec{E} = \frac{1}{4\pi\epsilon_0}\frac{q}{r^2}\hat{r}$$

**Electric potential:**

$$V = U/q_0$$

$$V = \frac{1}{4\pi\epsilon_0}\sum_i \frac{q_i}{r_i}$$

$$V = \frac{1}{4\pi\epsilon_0}\int \frac{dq}{r}$$

$$V_a - V_b = \int_a^b \vec{E} \cdot d\vec{\ell}$$

$$E_x = -\frac{\partial V}{\partial x},\ E_y = -\frac{\partial V}{\partial y},\ E_z = -\frac{\partial V}{\partial z}$$

$$W^E_{a\to b} = -\Delta U = -q\Delta V = -q(V_b - V_a)$$

($W^E$ is the work done by Electrostatic force)

**Capacitors and capacitance:**

$$C = Q/V_{ab} \quad , \quad C = \epsilon_0 A/d$$

**Capacitors in series:**

$$\frac{1}{C_{eq}} = \frac{1}{C_1} + \frac{1}{C_2} + \frac{1}{C_3} + \dots$$

**Capacitors in parallel:**

$$C_{eq} = C_1 + C_2 + C_3 + \dots$$

**Capacitors with a dielectric:**

$$C = \kappa C_0 \quad , \quad \kappa = \frac{\epsilon}{\epsilon_0}$$

**Energy in a capacitor:**

$$U = \frac{Q^2}{2C} = \frac{1}{2}CV^2 = \frac{1}{2}QV$$

**Electric energy density:**

$$u = \frac{1}{2}\epsilon_0 E^2$$

**Problem 1** (25 points)

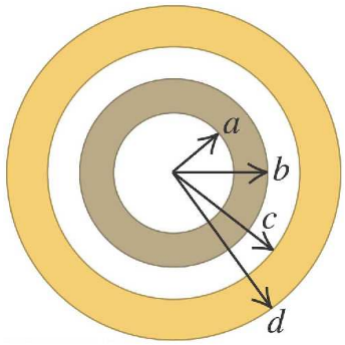


A small conducting spherical shell with inner radius $a$ and outer radius $b$ is concentric with a larger conducting spherical shell with inner radius $c$ and outer radius $d$, as shown in the figure. The inner small shell has a total charge of $+2q$ and the outer shell has a total charge of $+4q$.

(a) (15pts.) Calculate the electric field for (i) $r < a$ , (ii) $a < r < b$ , (iii) $c < r < d$ and (iv) $r > d$.

(i) $r < a$
Apply Gauss' Law for an imaginary sphere of radius $r$ concentric with conducting shells. Since $Q_{enc} = 0$ inside this sphere $\boxed{E = 0}$ for this region.

(ii) $a < r < b$
This region is the interior of the inner conducting shell. In electrostatic situations $\boxed{E = 0}$ inside conductors.

(iii) $c < r < d$
This region is the interior of the outer conducting shell. In electrostatic situations $\boxed{E = 0}$ inside conductors.

(iv)
Apply Gauss' Law for an imaginary sphere of radius $r$ concentric with conducting shells. $Q_{enc} = 2q + 4q = 6q$.

$$\oint \vec{E} \cdot d\vec{A} = \frac{Q_{enc}}{\epsilon_0} \Longrightarrow E(4\pi r^2) = \frac{6q}{\epsilon_0} \Longrightarrow \boxed{E = \frac{3q}{2\pi\epsilon_0 r^2}}$$

(b) (10pts.) What is the total charge on: (i) inner surface of the small shell (ii) outer surface of the small shell (iii) inner surface of the large shell and (iv) outer surface of the large shell?

Remember in electrostatic situations free charges always appear on the surfaces of conductors.

(i) Draw a Gaussian sphere of radius $r$ at the interior of inner shell ($a < r < b$). Since $E = 0$ in this region and no any charge present at $r < a$, Gauss' Law tells us that there should be **no charge** at all on the inner surface of the small shell.

(ii) Small shell has a total charge of $2q$. Since there is no charge on the inner surface, all this charge $2q$ **lies on the outer surface** of the small shell.

(iii) Draw a Gaussian sphere of radius $r$ at the interior of outer shell ($c < r < d$). $E = 0$ in this region tells us that $Q_{enc} = 0$ for this imaginary sphere. So, $Q_{enc} = 2q + Q_{inner} = 0 \Longrightarrow \boxed{Q_{inner} = -2q}$.

(iv) Total charge on the large shell $4q = Q_{inner} + Q_{outer} \Longrightarrow 4q = -2q + Q_{outer} \Longrightarrow \boxed{Q_{outer} = 6q}$

**Problem 2** (30 points)

An infinite planar flat surface has a uniform areal charge density of $\sigma$. A small finite circular hole of radius $R$ has been cut in the middle of the flat surface, as shown in the figure. Ignoring the fringing of the field around the edges, calculate the electric field at point $P$, which is at a distance $z$ from the center of the hole along its central axis. (Hint: You can use the superposition principle to calculate $E$. You can make the following substitution when necessary: $u = z^2 + r^2$. The electric field of a charged ring with radius $r$ and thickness $dr$ can be taken as $dE_z = \dfrac{1}{4\pi\epsilon_0}\dfrac{2\pi r\sigma z\ dr}{(z^2+r^2)^{3/2}}$ )

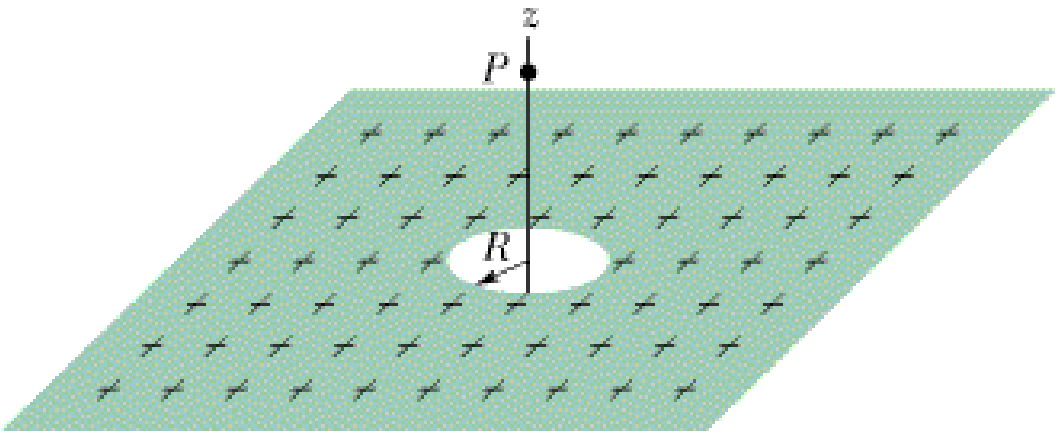


You can think of the setup in the figure as the superposition of infinite planar sheet with charge density $\sigma$ and circular disk of radius $R$ with charge density $-\sigma$. So, $\vec{E}_P = \vec{E}_{sheet} + \vec{E}_{disk}$.

Gauss' Law tells us that $E_{sheet} = \dfrac{\sigma}{2\epsilon_0}$ everywhere perpendicular to sheet (in $z$ direction at point P).

To calculate the electric field due to disk you must first write the electric field of a ring with radius $r$ and thickness $dr$, then integrate it.

$$\vec{E}_{disk} = \int_0^R \frac{1}{4\pi\epsilon_0}\frac{2\pi r(-\sigma)zdr}{(z^2+r^2)^{3/2}}$$

with the substitution $u = z^2 + r^2$

$$\vec{E}_{disk} = \frac{1}{4\pi\epsilon_0}\int_{z^2}^{z^2+R^2}\frac{\pi(-\sigma)zdu}{u^{3/2}}\hat{k} = -\frac{\sigma z}{4\epsilon_0}\left(\frac{-2}{\sqrt{u}}\right)_{z^2}^{z^2+R^2}\hat{k} = -\frac{\sigma}{2\epsilon_0}\left(1-\frac{z}{\sqrt{z^2+R^2}}\right)\hat{k}$$

$$\vec{E}_P = \vec{E}_{sheet} + \vec{E}_{disk} = \frac{\sigma}{2\epsilon_0}\hat{k} - \frac{\sigma}{2\epsilon_0}\left(1-\frac{z}{\sqrt{z^2+R^2}}\right)\hat{k} \Longrightarrow \boxed{\vec{E}_P = \frac{\sigma z}{2\epsilon_0\sqrt{z^2+R^2}}\hat{k}}$$

**Problem 3** (25 points)

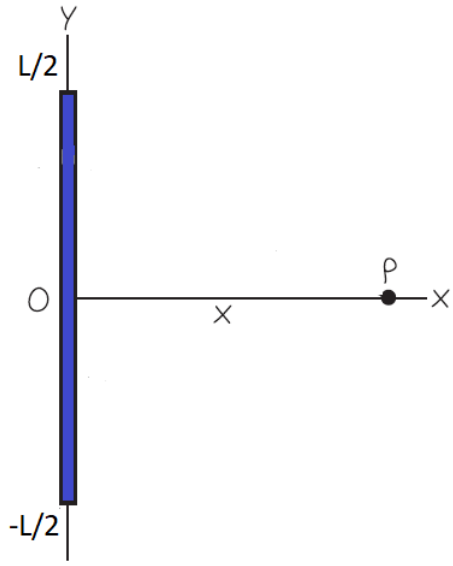


Electrical charge is non-uniformly distributed on a rod of length $L$, which is on the $y-$axis. The linear charge density of the rod changes with the $y$ coordinate such that $\lambda = y\lambda_0$ where $\lambda_0$ is a positive constant number. The rod is positioned symmetrically between $y = -L/2$ and $y = L/2$.

Calculate the electrical potential at a point $P$ which is on the $x-$axis. Using your answer and the identity $V = -\int \vec{E} \cdot d\vec{x}$, determine the direction of the electrical field on the $x-$axis.

Take an infinitesimal segment on the rod with position $y$, length $dy$ and charge $dq$. The differential charge $dq$ on the segment can be written as $dq = \lambda dy = y\lambda_0 dy$.

Electric potential at point $P$ due to charge segment is: $dV = \dfrac{1}{4\pi\epsilon_0}\dfrac{dq}{r} = \dfrac{1}{4\pi\epsilon_0}\dfrac{y\lambda_0 dy}{\sqrt{x^2+y^2}}$

To find the total electric potential at point $P$ due to the rod you must integrate the above expression between $-L/2$ and $L/2$.

$$V_P = \int_{-L/2}^{L/2} \frac{1}{4\pi\epsilon_0}\frac{y\lambda_0 dy}{\sqrt{x^2+y^2}}$$

with the substitution $u = x^2 + y^2$;

$$V_P = \frac{1}{4\pi\epsilon_0}\int_{x^2+L^2/4}^{x^2+L^2/4} \frac{\lambda_0 du}{2\sqrt{u}} = \frac{\lambda_0}{4\pi\epsilon_0}\left(\sqrt{u}\right)_{x^2+L^2/4}^{x^2+L^2/4} \Longrightarrow \boxed{V_P = 0}$$

Since $V_P = 0$, by the given identity you can easily see that electric field is perpendicular to $x$ direction ($\vec{E} \perp \vec{x}$). Besides, from the configuration you can show that $\vec{E}$ is in $-y$ direction.

**Problem 4** (20 points)

Three capacitors $C_1 = 2\mu F$, $C_2 = 3\mu F$ and $C_3 = 5\mu F$ are connected to a battery $\Delta V = 10V$ as shown. How the energy stored in the network changes if a dielectric with $\kappa = 6$ is inserted into $C_1$?

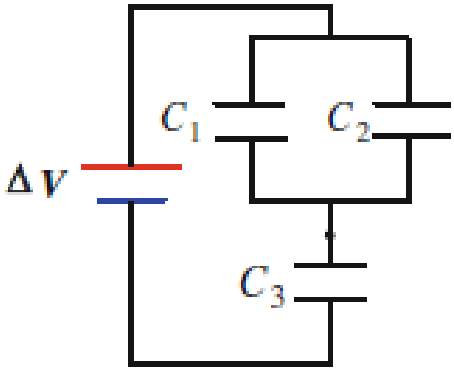


Find equivalent capacitance of the network before and after the dielectric is inserted. Then calculate the energy stored in the network for both cases and compare the results.

Before dielectric is inserted:

$$C_{12} = C_1 + C_2 = 2\mu F + 3\mu F = 5\mu F$$

,

$$\frac{1}{C_{eq}} = \frac{1}{C_{12}} + \frac{1}{C_3} = \frac{1}{5\mu F} + \frac{1}{5\mu F} \Longrightarrow C_{eq} = 2.5\mu F$$

$$U = \frac{C_{eq}\Delta V^2}{2} = \frac{(2.5\mu F)(10V)^2}{2} = 125J$$

After dielectric is inserted:

$$C_{12} = \kappa C_1 + C_2 = 6 \times (2\mu F) + 3\mu F = 15\mu F$$

,

$$\frac{1}{C_{eq}} = \frac{1}{C_{12}} + \frac{1}{C_3} = \frac{1}{15\mu F} + \frac{1}{5\mu F} \Longrightarrow C_{eq} = \frac{15}{4}\mu F$$

$$U = \frac{C_{eq}\Delta V^2}{2} = \frac{(15/4\mu F)(10V)^2}{2} = 187.5J$$

So, $\Delta U = 187.5J - 125J = 62.5J$. The energy stored in the network increases by $62.5J$.