ÖZYEĞİN UNIVERSITY

PHYS102/Fall 2022-2023
Final Exam

PHYSICS 102 NO: _____

NAME: _____

(On my honor I have neither given nor received any unauthorized assistance on this exam.)

- This exam is out of 100 points for 5 problems.
- This exam is for 120 minutes.
- This is a closed-book/notes/calculator/laptop exam.
- Read the questions carefully and write down your solutions in the space provided neatly and clearly. Write down your final results in the boxes at the end of each question.
- **Answers without work shown or proper explanation will not be given any credit.**.

1	2	3	4	5	Total

Formula Sheet

Coulomb's law:

$F = \frac{1}{4\pi\epsilon_0}\frac{|q_1 q_2|}{r^2}$

$\frac{1}{4\pi\epsilon_0} = 9\times 10^9\ \mathrm{N\cdot m^2/C^2}$

Electric field:

$\vec{E} = \frac{\vec{F}_0}{q_0}$

Electric potential energy:

$W^E_{a\to b} = -\Delta U = U_a - U_b$

$U = \frac{1}{4\pi\epsilon_0}\frac{qq_0}{r}$

$\vec{E} = \frac{1}{4\pi\epsilon_0}\frac{q}{r^2}\hat{r}$

Electric flux:

$\Phi_E = \int E\cos\phi\, dA = \int \vec{E}\cdot d\vec{A}$

Gauss's law:

$\Phi_E = \oint \vec{E}\cdot d\vec{A} = \frac{Q_{\mathrm{enc}}}{\epsilon_0}$

Electric potential:

$V = U/q_0$

$V = \frac{1}{4\pi\epsilon_0}\int\frac{dq}{r}$

$V_a - V_b = \int_a^b \vec{E}\cdot d\vec{\ell}$

$E_x = -\frac{\partial V}{\partial x},\ E_y = -\frac{\partial V}{\partial y},\ E_z = -\frac{\partial V}{\partial z}$

$W^E_{a\to b} = -\Delta U = -q\Delta V = -q(V_b - V_a)$

Capacitors and capacitance:

$C = Q/V_{ab}$

$C = \epsilon_0 A/d$

Capacitors in series:

$\frac{1}{C_{eq}} = \frac{1}{C_1} + \frac{1}{C_2} + \frac{1}{C_3} + \dots$

Capacitors in parallel:

$C_{eq} = C_1 + C_2 + C_3 + \dots$

(W^E is the work done by Electrostatic force.)

$\epsilon_0 = 8.85\times 10^{-12}\ \mathrm{C^2/N\cdot m^2}$

$\mu_0 = 4\pi\times 10^{-7}\frac{N}{A^2}$

Capacitors with a dielectric:

$C_\kappa = \kappa C_0\ ,\quad \kappa = \frac{\epsilon}{\epsilon_0}$

Energy in a capacitor:

$U = \frac{Q^2}{2C} = \frac{1}{2}CV^2 = \frac{1}{2}QV$

Electric energy density:

$u = \frac{1}{2}\epsilon_0 E^2$

Current and current density:

$I = dQ/dt = n|q|v_d A$

$\vec{J} = nq\vec{v}_d$

Resistivity: $\rho = E/J$

Resistors: $V = IR,\quad R = \rho L/A$

Energy and power:

$P = (V_{\mathrm{a}} - V_{\mathrm{b}})I_{\mathrm{b}\to\mathrm{a}}$

$P = I^2R = V^2/R$ (for resistors)

Energy from power:

$U = \int P dt$ (if P is time dependent.)

$U = P(t_f - t_i)$ (if P is time indep.)

Resistors in series:

$R_{eq} = R_1 + R_2 + R_3 + \dots$

Resistors in parallel:

$\frac{1}{R_{eq}} = \frac{1}{R_1} + \frac{1}{R_2} + \frac{1}{R_3} + \dots$

Kirchoff's Rules:

$\sum I = 0$ (junction rule)

$\sum V = 0$ (loop rule)

Charging RC Circuit:

<u>if $Q_0 = 0$:</u> $Q(t) = Q_f(1 - e^{-t/RC})$

<u>if $Q_0 \neq 0$:</u>

$Q(t) = Q_0 + (Q_f - Q_0)(1 - e^{-t/RC})$

$I(t) = I_0 e^{-t/RC},\quad I(t) = \frac{dQ(t)}{dt}$

Discharging capacitor:

$Q(t) = Q_0 e^{-t/RC}$

$I(t) = I_0 e^{-t/RC}$

Time Constant of an RC Circuit:

$\tau = RC$

Magnetic force on a moving charged particle:

$\vec{F}_B = q\vec{v}\times\vec{B}$

Magnetic force on a current carrying conductor:

$\vec{F}_B = I\vec{\ell}\times\vec{B}$

$d\vec{F}_B = Id\vec{\ell}\times\vec{B}$ (on a wire segment.)

Magnetic moment: $\vec{\mu} = NI\ \vec{A}$

(N is the number of windings.)

Magnetic torque: $\vec{\tau} = \vec{\mu}\times\vec{B}$

Potential Energy stored in a current carrying loop placed in B:

$U = -\vec{\mu}.\vec{B}$

Magnetic field of a moving charge:

$\vec{B} = \frac{\mu_0}{4\pi}\frac{q\vec{v}\times\hat{r}}{r^2}$

Magnetic field of a current-carrying conductor: (Biot-Savart Law)

$d\vec{B} = \frac{\mu_0}{4\pi}\frac{Id\vec{\ell}\times\hat{r}}{r^2}$ or $d\vec{B} = \frac{\mu_0}{4\pi}\frac{Id\vec{\ell}\times\vec{r}}{r^3}$

Magnetic field strength of a long, straight, current-carrying conductor:

$B = \frac{\mu_0 I}{2\pi R}$

Magnetic field strength of a circular loop at its center:

$B = \frac{\mu_0 I}{2R}$

Magnetic force between current-carrying conductors:

$\frac{F}{L} = \frac{\mu_0 I I'}{2\pi R}$

Ampere's Law:

$\oint \vec{B}\cdot d\vec{\ell} = \mu_0 I_{\mathrm{enc}}$

$I_{\mathrm{enc}} = \oint \vec{J}\cdot d\vec{A}, (I = \vec{J}\cdot\vec{A},$ if J is constant)

Magnetic Flux:

$\Phi_B = \int \vec{B}\cdot d\vec{A}$

$\Phi_B = \vec{B}\cdot\vec{A}$ (for uniform $\vec{B}$)

Faraday's Law:

$\varepsilon = -\frac{d\phi_B}{dt}$

Motional EMF:

$\varepsilon = \oint(\vec{v}\times\vec{B})\cdot d\vec{l}$

Induced Electric Fields:

$\oint \vec{E}\cdot d\vec{l} = -\frac{d\phi_B}{dt}$

Problem 1 (25 points)

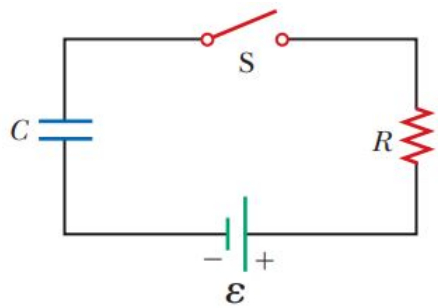

A parallel plate capacitor with plate area A, separation d and capacitance C is used in the RC circuit shown in the figure. Capacitor has an initial charge Q_0, the switch is closed at $t = 0$ and the charging process begins.

(a) (10pts.) Derive the expression for the charge on capacitor for $t > 0$

Apply loop rule for any instant $t > 0$:

$$\varepsilon - \frac{dq}{dt}R - \frac{q}{C} = 0$$

Rearrange the equation and integrate as follows:

$$\int_{Q_0}^{Q} \frac{dq}{C\varepsilon - q} = \int_0^t -\frac{dt}{RC}$$

Then; $\boxed{Q(t) = C\varepsilon + (Q_0 - C\varepsilon)e^{-t/RC}}$

(b) (8pts.) Calculate the potential difference between the plates of capacitor at $t = 10$s with the following given values: $\varepsilon = 50$V, $R = 5\text{M}\Omega$, $C = 10\mu$F, $Q_0 = 150\mu$C. (You may need $e^{-1/5} \approx 0.8$)

Calculate the charge on capacitor at $t = 10$s.Time constant of the circuit is $\tau = RC = (5\text{M}\Omega)(10\mu\text{F}) = 50$s.

$$Q(t = 10\text{s}) = (10\mu\text{F})(50\text{V}) + ((150\mu\text{C}) - (10\mu\text{F})(50\text{V}))\text{e}^{-10\text{s}/50\text{s}} = 220\mu\text{C}$$

Then; $V = \dfrac{Q}{C} = \dfrac{220\mu\text{C}}{10\mu\text{F}} \longrightarrow \boxed{V = 22\text{V}}$

(c) (7pts.) If the plate separation is $d = 2$mm and the electric field between the plates of capacitor is also given as $E(t) = E_0 + E_1 t^2$ find E_0 and E_1 (<u>with correct units</u>) at $t = 10$s.

From $V_{\text{ab}} = \displaystyle\int_a^b \vec{E} \cdot d\vec{\ell} \Longrightarrow V_{\text{ab}} = Ed \Longrightarrow \boxed{V_{\text{ab}} = (E_0 + E_1 t^2)d}$

At $t = 0$: $V_{\text{ab}} = V_0$

$$V_0 = \frac{Q_0}{C} = \frac{150\mu\text{C}}{10\mu\text{F}} \Longrightarrow V_0 = 15V \quad \text{Then} \quad V_0 = E_0 d \Longrightarrow \boxed{E_0 = \frac{15V}{2\text{mm}} = 7500\text{V/m}}$$

At $t = 10$s: $V_{\text{ab}} = V$ (where V is from part (b))

$$V = (E_0 + E_1 t^2)d \Longrightarrow (22\text{V}) = [(7500\text{V/m}) + \text{E}_1(10\text{s})^2](2\text{mm}) \Longrightarrow \boxed{E_1 = 35\text{V/m.s}^2}$$

Problem 2 (20 points)

A wire that is carrying current I is on the y-z plane. This wire is bent in the form of a parabola with equation $z = y^2$, as shown in the figure. An external non-uniform magnetic field of $\vec{B} = (B_o z)\hat{\imath}$ is acting on the wire all along the space, where B_o is a constant and $\hat{\imath}$ is the unit vector in $+x$-direction.

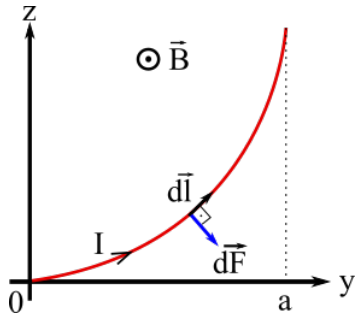

(a) (5 pts.) Write the line element $d\vec{l}$ in terms of dy, dz, $\hat{\jmath}$ and $\hat{k}$ and show the direction of $d\vec{F}$ on $d\vec{l}$.

Infinitesimal line element $d\vec{l}$ lies on y-z plane, therefore it only has y and z components. $\boxed{d\vec{l} = dy\ \hat{\jmath} + dz\ \hat{k}}$.

Magnetic force acting on a wire element is given by $d\vec{F} = Id\vec{l} \times \vec{B}$. As a result of the cross product (right hand rule) $d\vec{F}$ will be in the direction shown at the figure.

(b) (9 pts.) Construct the integral that will give the total force on the wire between $y = 0$ and $y = a$.

$$d\vec{F} = Id\vec{l} \times \vec{B} = I(dy\ \hat{\jmath} + dz\ \hat{k}) \times (B_o z\ \hat{\imath}) = IB_0 z dy(-\hat{k}) + IB_0 z dz(\hat{\jmath})$$

Since $z = y^2$ we get $dz = 2ydy$. Replacing these into above equation:

$$d\vec{F} = IB_0 y^2 dy(-\hat{k}) + IB_0 y^2 2ydy(\hat{\jmath}) = -IB_0 y^2 dy\hat{k} + 2IB_0 y^3 dy\hat{\jmath}$$

Integrating both hand side we get the expression for the total magnetic force:

$$\boxed{\vec{F} = -IB_0 \int_0^a y^2 dy\hat{k} + 2IB_0 \int_0^a y^3 dy\hat{\jmath}}$$

(c) (6 pts.) Evaluate the integral to find the total force on the wire between $y = 0$ and $y = a$.

$$\vec{F} = -IB_0 \left(\frac{y^3}{3}\right)_0^a \hat{k} + 2IB_0 \left(\frac{y^4}{4}\right)_0^a \hat{\jmath} \Longrightarrow \boxed{\vec{F} = -\frac{IB_0 a^3}{3}\hat{k} + \frac{IB_0 a^4}{2}\hat{\jmath}}$$

Problem 3 (15 points)

A cross-sectional view of a long coaxial cable with inner radius $a = 1$cm and outer radius $b = 3$cm is given in the figure. Cable carries a uniform current of $I = 48$A, into the page direction. (Take $\pi = 3$).

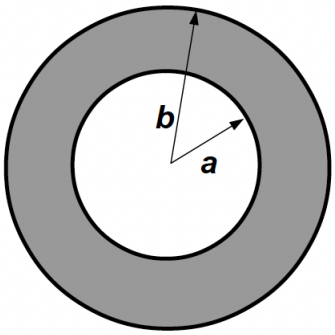

(a) **(5 pts.)** Find the magnitude of the current density.

Current density: $J = I/\text{area}$, since I is uniform.

Thus $J = I/\pi(b^2 - a^2) = 48A/3(3^2 - 1^2) \times 10^{-4}m^2 = 2 \times 10^4 A/m^2$, or $2A/cm^2$.

(b) **(10 pts.)** Determine the magnitude of the magnetic field at a point 2 cm away from the central line. (Take $\mu_0 = 1.2 \times 10^{-6}\text{T} \cdot \text{m/A}$).

According to Amphere's Law: $\oint \vec{B} \cdot d\hat{l} = \mu_0 I_{\text{enc}}$, and $I_{enc} = JA_{enc} = J\pi(r^2 - a^2) = 18A$.

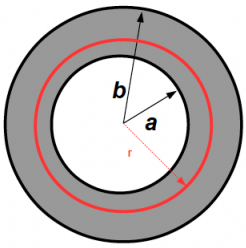

After drawing the Amphere's loop as shown, $\oint \vec{B} \cdot d\hat{l} = B2\pi r$.

Thus $B(r = 2cm) = \mu_0 I_{enc}/2\pi r = 1.2 \times 10^{-6} \times 18/(2 \times 3 \times 2 \times 10^{-2}) = 1.8 \times 10^{-4}\ T$.

Problem 4 (20 points)

A square wire loop with side a, carrying current I, has uniform mass M. The loop is hinged such that it can rotate around the $x-$axis freely. A uniform magnetic field is applied in the $+y$ direction and its magnitude is B. If the loop is in equilibrium,

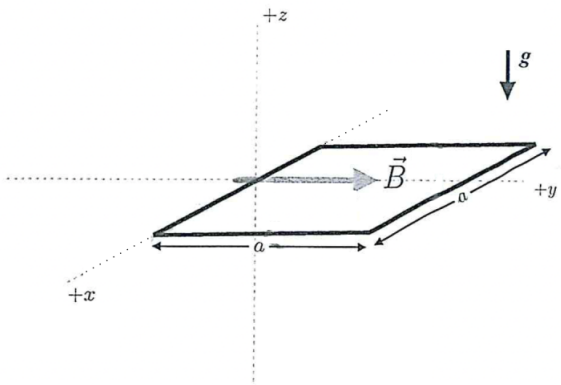

(a) (10 pts.) show the direction of the current around the loop with an explanation.

The axis of rotation is x-axis, if the loop is in equilibrium then the net torque along x-axis must be 0. There are 2 torques acting on loop, gravitational torque τ_G and magnetic torque τ_B.

$$\Sigma\vec{\tau} = \vec{\tau}_G + \vec{\tau}_B = 0 \Longrightarrow \vec{\tau}_G = -\vec{\tau}_B$$

$$\vec{\tau}_G = \vec{r} \times \vec{F}_G = \left(\frac{a}{2}\right)\hat{\jmath} \times (Mg)(-\hat{k}) = \left(\frac{Mga}{2}\right)(-\hat{\imath})$$

Therefore $\vec{\tau}_B$ must be in $+x$ direction. Since $\vec{\tau}_B = \vec{\mu} \times \vec{B}$ magnetic moment μ must be in $-z$ direction, and by right hand rule the current around the loop must be flowing in clockwise direction.

(b) (10 pts.) Find the current I around the loop in terms of M, B, a and g.

$$\tau_G = \tau_B \Longrightarrow rF_G \sin\theta = \mu B \sin\phi \Longrightarrow \frac{Mga}{2} = Ia^2B \Longrightarrow \boxed{I = \frac{Mg}{2aB}}$$

Problem 5 (20 points)

A conducting square loop of resistance $R = 2.5\text{m}\Omega$ with side 10cm lies perpendicular to a uniform magnetic field of $B = 5\text{mT}\hat{\imath}$. At $t = 0$ the loop is started to rotate with a constant angular speed of $\omega = \frac{\pi}{4}\text{rad/s}$ about the $y-$axis as shown in the figure.

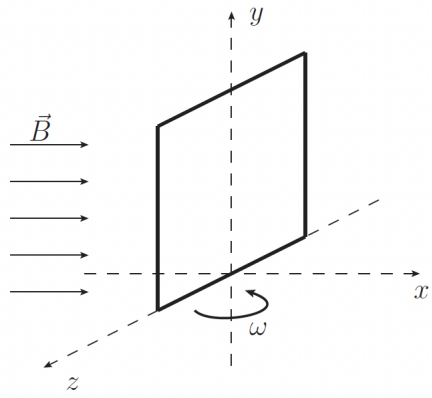

(a) (7 pts.) Find the magnetic flux through the loop at $t = 5\text{s}$.

The position of the loop at $t = 5\text{s}$ is $\theta = \omega t = \frac{5\pi}{4}\text{rad}$.

$$\Phi_B = \vec{B} \cdot \vec{A} = BA\cos\theta = (3 \times 10^{-3}\text{T})(10^{-2}\text{m}^2)\cos(\frac{5\pi}{4}) \Longrightarrow \boxed{\Phi_B = -\frac{5\sqrt{2}}{2} \times 10^{-5}\text{Wb}}$$

(b) (8 pts.) Find the magnitude of induced current around the loop at $t = 5\text{s}$.

$$\Phi_B = \vec{B} \cdot \vec{A} = BA\cos\omega t \Longrightarrow \frac{d\Phi_B}{dt} = -BA\omega\sin\omega t$$

By Faraday's law: $\varepsilon = -\frac{d\Phi_B}{dt} = BA\omega\sin\omega t$

an at $t = 5\text{s}$: $\varepsilon = (5 \times 10^{-3}\text{T})(10^{-2}\text{m}^2)(\frac{\pi}{4}\text{rad/s})\sin(\frac{5\pi}{4}) \Longrightarrow \varepsilon = -\frac{5\pi}{4\sqrt{2}} \times 10^{-5}\text{V}$

From Ohm's law: $I_{\text{ind}} = \frac{|\varepsilon|}{R} = \frac{\frac{5\pi}{4\sqrt{2}} \times 10^{-5}\text{V}}{2.5 \times 10^{-3}\Omega} \Longrightarrow \boxed{I_{\text{ind}} = \frac{\pi}{2\sqrt{2}} \times 10^{-2}\text{A}}$

(c) (5 pts.) Label the upper right corner as "a" and upper left corner as "b" on the loop. Find the direction of the induced current on the loop (either $a \to b$ or $b \to a$) at $t = 5\text{s}$ and explain it by Lenz Law.

At $\theta = \pi$ the flux will be maximum, then from π to $\frac{5\pi}{4}$ flux will be decreasing. According to Lenz Law, induced emf must be in a way trying to increase the flux so that it should induce a current whose magnetic field will have a component parallel to external magnetic field. At $\theta = \frac{5\pi}{4}$ induced magnetic field therefore will have components in $+x$ and $-z$ directions. This will tell us that the current on the loop will be $b \to a$.