PHYS102/SPRING 2018-2019 Midterm 1

PHYSICS 102 NO: _____

NAME: _____

(On my honor I have neither given nor received any unauthorized assistance on this exam.)

- This exam is out of 100 points.
- This exam is for 70 minutes and has three problems (Check this now carefully.)
- This is a closed-book/notes/calculator/laptop exam.
- Read the questions carefully and write down your solutions in the space provided neatly and clearly. Write down your final results in the boxes at the end of each question.
- Answers without work shown or proper explanation will not be given any credit.
- A formula sheet is provided for you.

(Leave blank)

Problem 1	Problem 2	Problem 3	Total

Formula Sheet

Coulomb's law:

$$F = \frac{1}{4\pi\epsilon_0}\frac{|q_1 q_2|}{r^2}$$

$$\frac{1}{4\pi\epsilon_0} = 9\times 10^9\ \mathrm{N\cdot m^2/C^2}$$

Electric field:

$$\vec{E} = \frac{\vec{F}_0}{q_0}$$

$$\epsilon_0 = 9\times 10^{-12}\ \mathrm{C^2/N\cdot m^2}$$

Electric potential energy:

$$W_{a\to b} = U_a - U_b$$

$$U = \frac{1}{4\pi\epsilon_0}\frac{qq_0}{r}$$

$$\vec{E} = \frac{1}{4\pi\epsilon_0}\frac{q}{r^2}\hat{r}$$

Electric flux:

$$\Phi_E = \int E\cos\phi\, dA = \int \vec{E}\cdot d\vec{A}$$

Gauss's law:

$$\Phi_E = \oint \vec{E}\cdot d\vec{A} = \frac{Q_{\mathrm{enc}}}{\epsilon_0}$$

Electric potential:

$$V = U/q_0$$

$$V = \frac{1}{4\pi\epsilon_0}\int\frac{dq}{r}$$

$$V_a - V_b = \int_a^b \vec{E}\cdot d\vec{\ell}$$

$$E_x = -\frac{\partial V}{\partial x},\ E_y = -\frac{\partial V}{\partial y},\ E_z = -\frac{\partial V}{\partial z}$$

Capacitors and capacitance:

$$C = Q/V_{ab}$$

$$C = \epsilon_0 A/d$$

Capacitors in series:

$$\frac{1}{C_{eq}} = \frac{1}{C_1} + \frac{1}{C_2} + \frac{1}{C_3} + \dots$$

Capacitors in parallel:

$$C_{eq} = C_1 + C_2 + C_3 + \dots$$

Problem 1 (30 points)

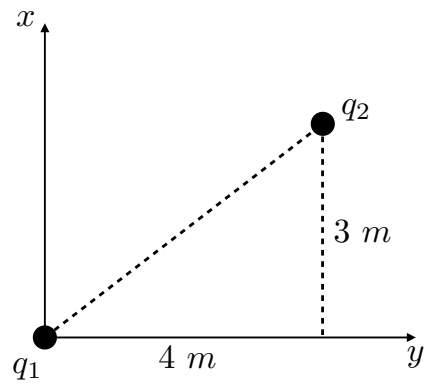

Two charges with $q_1 = 2\text{nC}$ and $q_2 = 4\text{nC}$ are placed as shown in the figure (nC: nano-Coulombs).

(a) (15 pts.) Find x and y coordinates for the point where electric field vanishes. (i.e. $E_{\text{net}} = 0$)

$(x, y)=$

(b) (15 pts.) Find the electric potential at origin.

$V_O=$

Problem 2 (30 points)

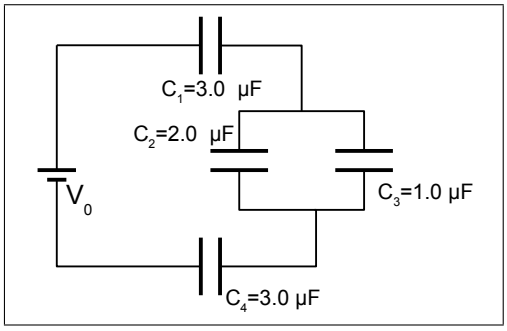

The **air** capacitors with C_1=C_4=3.0 μF, C_2= 2.0μF and C_3= 1.0μF are connected to a V_0 battery as shown.

If the charge on C_2 is Q_2=20.0 μC,

(a) (15 pts.) Find the equivalent capacitance of the circuit.

$\mathbf{C}_{Eq}$=

(b) (15 pts.) Find V_0.

V_0=

ε=

Problem 3 (40 points)

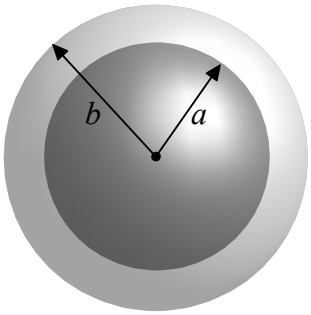

A conducting spherical shell, with an inner radius a and an outer radius b, has a total charge of $+Q$. The cavity inside the shell is filled with a nonconductive material that carries a total charge of $-2Q$ distributed uniformly through its volume.

(a) Find the magnitude of the electric field as a function of r (the radial distance from the center of the spheres) for the following regions:

i)(10pts.) $r \leq a$.

ii)(10pts.) $a \leq r \leq b$.

iii)(10pts.) $b \leq r$.

(b) (10pts.) Find surface charge densities on the inner and outer surfaces of the conducting shell.