ÖZYEĞİN UNIVERSITY

PHYS102/Spring 2022
Final Exam

PHYSICS 102 NO: _____

NAME: _____

(On my honor I have neither given nor received any unauthorized assistance on this exam.)

- This exam is out of 100 points for 5 problems.
- This exam is for 120 minutes.
- This is a closed-book/notes/calculator/laptop exam.
- Read the questions carefully and write down your solutions in the space provided neatly and clearly. Write down your final results in the boxes at the end of each question.
- **Answers without work shown or proper explanation will not be given any credit..**

1	2	3	4	5	Total

Formula Sheet

Coulomb's law:

$F = \frac{1}{4\pi\epsilon_0}\frac{|q_1 q_2|}{r^2}$

$\frac{1}{4\pi\epsilon_0} = 9 \times 10^9 \text{ N}\cdot\text{m}^2/\text{C}^2$

Electric field:

$\vec{E} = \frac{\vec{F_0}}{q_0}$

Electric potential energy:

$W^E_{a\to b} = -\Delta U = U_a - U_b$

$U = \frac{1}{4\pi\epsilon_0}\frac{qq_0}{r}$

$\vec{E} = \frac{1}{4\pi\epsilon_0}\frac{q}{r^2}\hat{r}$

Electric flux:

$\Phi_E = \int E\cos\phi\, dA = \int \vec{E}\cdot d\vec{A}$

Gauss's law:

$\Phi_E = \oint \vec{E}\cdot d\vec{A} = \frac{Q_{\text{enc}}}{\epsilon_0}$

Electric potential:

$V = U/q_0$

$V = \frac{1}{4\pi\epsilon_0}\int\frac{dq}{r}$

$V_a - V_b = \int_a^b \vec{E}\cdot d\vec{\ell}$

$E_x = -\frac{\partial V}{\partial x},\ E_y = -\frac{\partial V}{\partial y},\ E_z = -\frac{\partial V}{\partial z}$

$W^E_{a\to b} = -\Delta U = -q\Delta V = -q(V_b - V_a)$

Capacitors and capacitance:

$C = Q/V_{ab}$

$C = \epsilon_0 A/d$

Capacitors in series:

$\frac{1}{C_{eq}} = \frac{1}{C_1} + \frac{1}{C_2} + \frac{1}{C_3} + \dots$

Capacitors in parallel:

$C_{eq} = C_1 + C_2 + C_3 + \dots$

(W^E is the work done by Electrostatic force.)

$\epsilon_0 = 8.85 \times 10^{-12}\ \text{C}^2/\text{N}\cdot\text{m}^2$

$\mu_0 = 4\pi \times 10^{-7}\frac{N}{A^2}$

Capacitors with a dielectric:

$C_\kappa = \kappa C_0\ ,\quad \kappa = \frac{\epsilon}{\epsilon_0}$

Energy in a capacitor:

$U = \frac{Q^2}{2C} = \frac{1}{2}CV^2 = \frac{1}{2}QV$

Electric energy density:

$u = \frac{1}{2}\epsilon_0 E^2$

Current and current density:

$I = dQ/dt = n|q|v_d A$

$\vec{J} = nq\vec{v}_d$

Resistivity: $\rho = E/J$

Resistors: $V = IR,\quad R = \rho L/A$

Energy and power:

$P = (V_a - V_b)I_{b\to a}$

$P = I^2R = V^2/R$ (for resistors)

Energy from power:

$U = \int P dt$ (if P is time dependent.)

$U = P(t_f - t_i)$ (if P is time indep.)

Resistors in series:

$R_{eq} = R_1 + R_2 + R_3 + \dots$

Resistors in parallel:

$\frac{1}{R_{eq}} = \frac{1}{R_1} + \frac{1}{R_2} + \frac{1}{R_3} + \dots$

Kirchoff's Rules:

$\sum I = 0$ (junction rule)

$\sum V = 0$ (loop rule)

Charging RC Circuit:

<u>if $Q_0 = 0$:</u> $Q(t) = Q_f(1 - e^{-t/RC})$

<u>if $Q_0 \neq 0$:</u>

$Q(t) = Q_0 + (Q_f - Q_0)(1 - e^{-t/RC})$

$I(t) = I_0 e^{-t/RC},\quad I(t) = \frac{dQ(t)}{dt}$

Discharging capacitor:

$Q(t) = Q_0 e^{-t/RC}$

$I(t) = I_0 e^{-t/RC}$

Time Constant of an RC Circuit:

$\tau = RC$

Magnetic force on a moving charged particle:

$\vec{F}_B = q\vec{v}\times\vec{B}$

Magnetic force on a current carrying conductor:

$\vec{F}_B = I\vec{\ell}\times\vec{B}$

$d\vec{F}_B = Id\vec{\ell}\times\vec{B}$ (on a wire segment.)

Magnetic moment: $\vec{\mu} = NI\ \vec{A}$

(N is the number of windings.)

Magnetic torque: $\vec{\tau} = \vec{\mu}\times\vec{B}$

Potential Energy stored in a current carrying loop placed in B:

$U = -\vec{\mu}.\vec{B}$

Magnetic field of a moving charge:

$\vec{B} = \frac{\mu_0}{4\pi}\frac{q\vec{v}\times\hat{r}}{r^2}$

Magnetic field of a current-carrying conductor: (Biot-Savart Law)

$d\vec{B} = \frac{\mu_0}{4\pi}\frac{Id\vec{\ell}\times\hat{r}}{r^2}$ or $d\vec{B} = \frac{\mu_0}{4\pi}\frac{Id\vec{\ell}\times\vec{r}}{r^3}$

Magnetic field strength of a long, straight, current-carrying conductor:

$B = \frac{\mu_0 I}{2\pi R}$

Magnetic field strength of a circular loop at its center:

$B = \frac{\mu_0 I}{2R}$

Magnetic force between current-carrying conductors:

$\frac{F}{L} = \frac{\mu_0 I I'}{2\pi R}$

Ampere's Law:

$\oint \vec{B}\cdot d\vec{\ell} = \mu_0 I_{\text{enc}}$

$I_{\text{enc}} = \oint \vec{J}\cdot d\vec{A}, (I = \vec{J}\cdot\vec{A},$ if J is constant)

Magnetic Flux:

$\Phi_B = \int \vec{B}\cdot d\vec{A}$

$\Phi_B = \vec{B}\cdot\vec{A}$ (for uniform $\vec{B}$)

Faraday's Law:

$\varepsilon = -\frac{d\phi_B}{dt}$

Motional EMF:

$\varepsilon = \oint(\vec{v}\times\vec{B})\cdot d\vec{l}$

Induced Electric Fields:

$\oint \vec{E}\cdot d\vec{l} = -\frac{d\phi_B}{dt}$

Problem 1 (20 points)

The figure shows a capacitor, two ideal batteries, two resistors, and a switch S. Initially S has been open for a long time. If it is then closed for a long time, what is the change in the charge on the capacitor? $C = 10\ \mu\text{F}$, $\mathcal{E}_1 = 1.0$ V, $\mathcal{E}_2 = 3.0$ V, $R_1 = 0.2\ \Omega$ and $R_2 = 0.4\ \Omega$

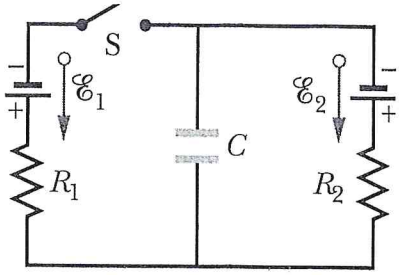

If S is open for a long time, total charge of the capacitor will be $Q = C.\Delta V = C.\mathcal{E}_2$

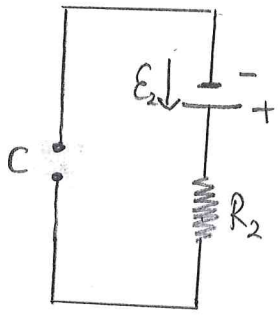

$\Rightarrow Q_1 = (10\times10^{-6}\ F)(3\ V)$

$Q_1 = 30\times10^{-6}\ C = 30\mu C$

Then, If it is closed for a long time, again the capacitor acts as an open circuit and we can find the current on resistors.

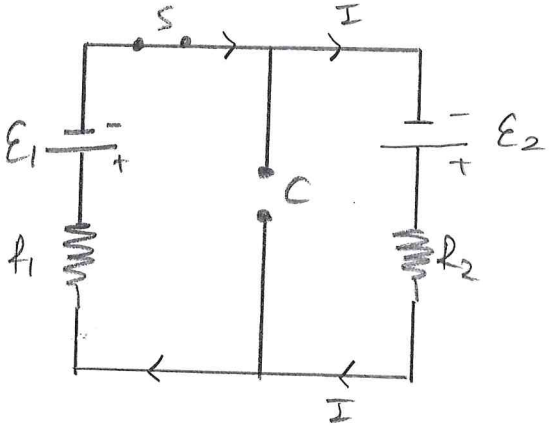

KVL

$\mathcal{E}_2 - IR_2 - IR_1 - \mathcal{E}_1 = 0$

$\Rightarrow I = \dfrac{\mathcal{E}_2 - \mathcal{E}_1}{R_1 + R_2} = \dfrac{3-1}{0.2+0.4}$

$\Rightarrow I = 3.33\ A$

For the 2nd situation voltage drop on capacitor; $\Delta V = \mathcal{E}_2 - IR_2$

$\Delta V = 1.67$ Volts

And final charge will be; $Q_2 = (10\times10^{-6}F).(1.67V)$

$\Delta Q = Q_2 - Q_1 = (1.67-3)(10\times10^{-6}) = -13.3\times10^{-6}\ C$

$= -13.3\ \mu C$

Problem 2 (20 points)

A point charge $-Q$ is placed at the center of a hollow spherical conducting shell with inner radius a and outer radius b as shown in the figure. The total charge of the shell is $-3Q$.

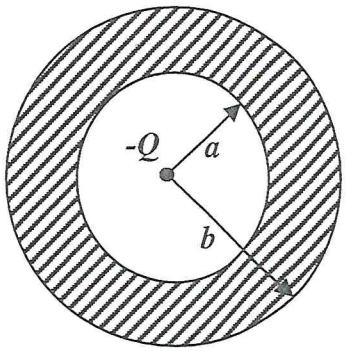

(a) (10 pts.) Find the electric field $\vec{E}(r)$ for $r < a$, $a < r < b$ and $r > b$.

$$\oint \vec{E} \cdot d\vec{A} = \frac{Q_{enclosed}}{\epsilon_0}$$

$r < a$

$$E \cdot 4\pi r^2 = \frac{Q}{\epsilon_0} \Rightarrow E = \frac{1}{4\pi\epsilon_0}\frac{Q}{r^2}$$

$a < r < b$

Inside the conducting material, $E = 0$

$b < r$

$$E\, 4\pi r^2 = \frac{4Q}{\epsilon_0} \Rightarrow E = \frac{1}{4\pi\epsilon_0}\frac{4Q}{r^2}$$

(b) (5 pts.) Find the surface charge density on the inner surface of the shell..

Because of the polarization, total charge on the inner surface is $+Q$.

$$\rho = \frac{+Q}{4\pi a^2}$$

(c) (5 pts.) Find the surface charge density on the outer surface of the shell.

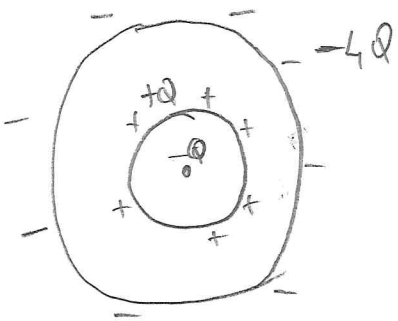

Total charge must be conserved after polarization and charge on the outer surface must be $-4Q$

$$\rho = \frac{-4Q}{4\pi b^2}$$

Problem 3 (20 points)

A metallic rod of mass m, length L and resistance R is placed on a very long frictionless inclined plane (with angle θ) which has conducting wires on it. The wires have no resistance and they form a loop with the metallic rod as shown in the figure. There is a uniform magnetic field $\vec{B}$ pointing in the z direction (vertically upwards). The rod starts from rest and slides down the incline.

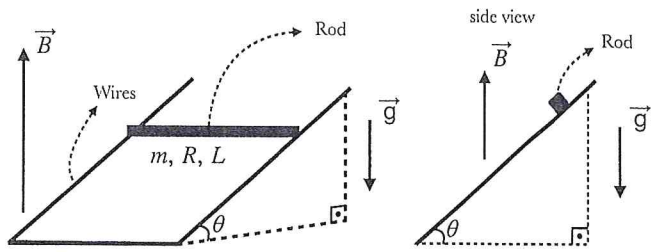

(a) (10 pts.) Find the induced emf and induced current on the rod (magnitude and direction).

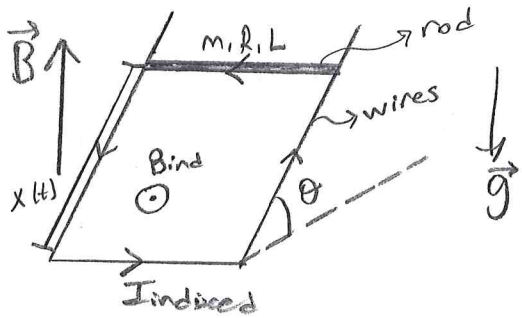

Side view:

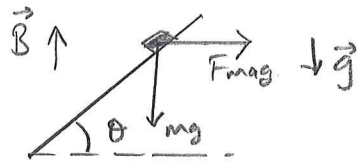

$$I_{ind} = \frac{\mathcal{E}_{ind}}{R}$$

$$I_{ind} = \frac{BL\cos\theta\, V(t)}{R}$$

$$|\mathcal{E}_{ind}| = \frac{d\phi}{dt} = \frac{d}{dt}\left(B \cdot L \cdot x(t) \cdot \cos\theta\right) = BL\cos\theta\, V(t)$$

(b) (5 pts.) Find the final (terminal) velocity of the rod as time goes to infinity.

Terminal velocity is reached when F_{net} on the rod is 0.

$$F_{net} = mg\sin\theta - F_{mag}\cos\theta = mg\sin\theta - B\, I_{ind}\, L\cos\theta = 0$$

$$\Rightarrow mg\sin\theta = B \cdot \left(\frac{BL\cos\theta\, V(t)}{R}\right) L\cos\theta$$

$$\Rightarrow V(t) = \frac{mgR\sin\theta}{B^2L^2\cos^2\theta}$$

(c) (5 pts.) (3) Write the equation of motion of the rod to calculate its velocity at any given time.

Equation of motion: $\vec{F}_{net} = ma$

$$mg\sin\theta - F_{mag}\cos\theta = ma \Rightarrow mg\sin\theta - \frac{B^2L^2\cos^2\theta\, V(t)}{R} = m\frac{dV(t)}{dt}$$

Problem 4 (20 points)

A toroidal solenoid (which is a solenoid with rectangular profile) has N turns of tightly wound wires on it which carry a current I. The solenoid is bent in the shape of a circle to construct a toroid with inner radius a and outer radius b as shown in the figure. Find the magnetic field for $i)$ $r < a$, $ii)$ $a < r < b$ and $iii) r > b$ where r is the radial distance from the center.

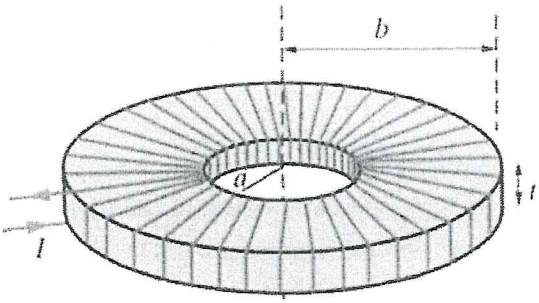

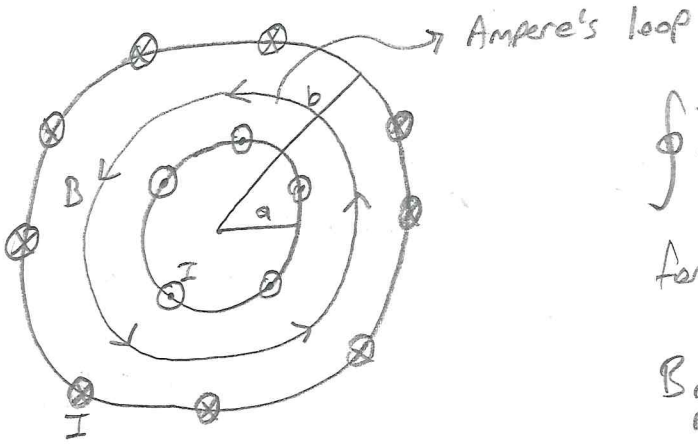

$$\oint \vec{B} \cdot d\vec{l} = \mu_0 \sum I_{enclosed}$$

for $r<a$ and $r>b$ $I_{enc} = 0$

$$B_{\substack{r<a \\ r>b}} = 0$$

for $a < r < b$

$$B \cdot 2\pi r = \mu_0 N I$$

$$B = \frac{\mu_0 N I}{2\pi R}$$ (direction shown on figure)

Problem 5 (20 points)

Two infinitely long wires carry equal currents i. Each follows a 90° arc on the circumference of the same circle of radius R as shown in the figure.

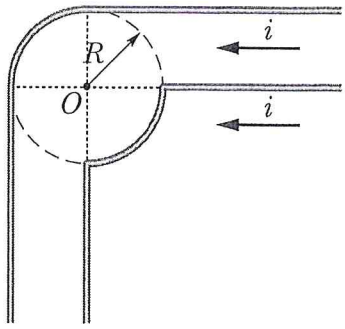

(a) (15 pts.) Find the magnetic field $\vec{B}$ (magnitude and direction) at the center (point O).

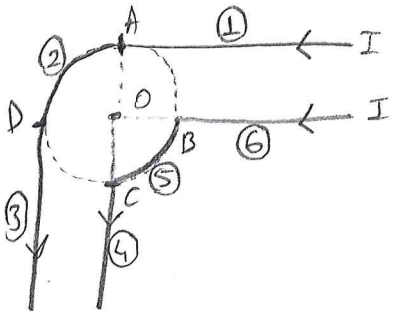

→ For segment 1 and 6, magnetic field will be 0. Because the direction of current goes on the center.

→ Segment 2 and 5 create magnetic fields of the same magnitude but in different directions. So their sum is zero.

→ Total mag. field at the center comes from segment 1 and 3 and direction is outwards.

$$B_1 = B_3 = \frac{\mu_0}{4\pi} \frac{I}{R}$$

$$B_{total} = \frac{\mu_0 I}{2\pi R} \odot$$

(b) (5 pts.) Compare your result to the magnetic field $\vec{B}$ distance R below an infinite straight wire carrying a current i to the left.

From Biot - Sawart Law

$$dB = \frac{\mu_0}{4\pi} \frac{I\, dl \sin\theta}{r^2}$$

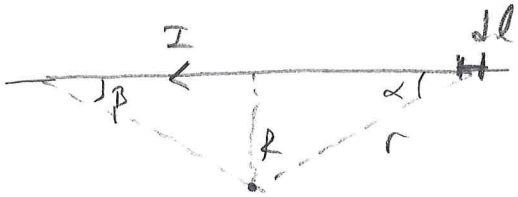

$$B = \frac{\mu_0}{4\pi} \frac{I}{R} (\sin\alpha + \sin\beta)$$

for an infinitle long wire $\alpha = \beta = 90°$

$$B = \frac{\mu_0}{4\pi} \frac{I}{R} (1 + 1)$$

$$\boxed{B = \frac{\mu_0 I}{2\pi R}}$$

They are equal to each others.