ÖZYEĞİN UNIVERSITY

PHYSICS 101 NO: _____

NAME: _____

PHYS101/Spring 2014-2015 — Midterm 1

(On my honor I have neither given nor received any unauthorized assistance on this exam.)

- This is a closed-everything exam.
- This exam is for **60 minutes** and has three problems out of **120 points**.
- Answers without work shown or proper explanation will not be given any credit.

(Leave blank)

Problem 1	Problem 2	Problem 3	Total

Formula Sheet

Scalar Product:

$\vec{A}\cdot\vec{B} = A_xB_x + A_yB_y + A_zB_z$

$\vec{A}\cdot\vec{B} = |A||B|\cos\phi$

Vector Product:

$\vec{A}\times\vec{B} = \vec{C}$

$C_x = A_yB_z - A_zB_y$

$C_y = A_zB_x - A_xB_z$

$C_z = A_xB_y - A_yB_x$

$|\vec{A}\times\vec{B}| = |A||B|\sin\phi$

Straight-line motion:

$$v_{av-x} = \frac{x_2 - x_1}{t_2 - t_1} = \frac{\boldsymbol{\Delta x}}{\boldsymbol{\Delta t}}$$

$$v_x = \lim_{\Delta t\to 0}\frac{\boldsymbol{\Delta x}}{\boldsymbol{\Delta t}} = \frac{dx}{dt}$$

$$a_{av-x} = \frac{v_{2x} - v_{1x}}{t_2 - t_1} = \frac{\boldsymbol{\Delta v_x}}{\boldsymbol{\Delta t}}$$

$$a_x = \lim_{\Delta t\to 0}\frac{\boldsymbol{\Delta v_x}}{\boldsymbol{\Delta t}} = \frac{dv_x}{dt}$$

Constant x-acceleration:

$v_x = v_{0x} + a_xt$

$x = x_0 + v_{0x}t + \frac{1}{2}a_xt^2$

$v_x^2 = v_{0x}^2 + 2a_x(x - x_0)$

$x - x_0 = \left(\frac{v_{0x} + v_x}{2}\right)t$

Motion in three dimensions:

$\vec{r} = x\hat{\imath} + y\hat{\jmath} + z\hat{k}$

$$\vec{v}_{av} = \frac{\vec{r}_2 - \vec{r}_1}{t_2 - t_1} = \frac{\boldsymbol{\Delta\vec{r}}}{\boldsymbol{\Delta t}}$$

$$\vec{v} = \lim_{\Delta t\to 0}\frac{\boldsymbol{\Delta\vec{r}}}{\boldsymbol{\Delta t}} = \frac{d\vec{r}}{dt}$$

$$\vec{a}_{av} = \frac{\vec{v}_2 - \vec{v}_1}{t_2 - t_1} = \frac{\boldsymbol{\Delta\vec{v}}}{\boldsymbol{\Delta t}}$$

$$\vec{a} = \lim_{\Delta t\to 0}\frac{\boldsymbol{\Delta\vec{v}}}{\boldsymbol{\Delta t}} = \frac{d\vec{v}}{dt}$$

$\sin 36.9^\circ = \cos 53.1^\circ = 0.6$, $\sin 53.1^\circ = \cos 36.9^\circ = 0.8$

Problem (1) (40 points)

Three vectors $\vec{A}$,$\vec{B}$, and $\vec{C}$ are given in unit vector notation as following:

$$\vec{A} = 2\hat{\imath} - 2\hat{\jmath} + \hat{k} \quad , \quad \vec{B} = 2\hat{\imath} - \hat{\jmath} - 2\hat{k} \quad , \quad \vec{C} = -\hat{\imath} + 2\hat{\jmath} + 2\hat{k}$$

(a) (15 pts.) Find the scalar product $\vec{A} \cdot \vec{B}$ and the cosine of the angle (θ) between these two vectors.

$\vec{A} \cdot \vec{B} = (2\hat{\imath} - 2\hat{\jmath} + \hat{k}) \cdot (2\hat{\imath} - \hat{\jmath} - 2\hat{k}) = (2)(2) + (-2)(-1) + (1)(-2) \Longrightarrow \boxed{\vec{A} \cdot \vec{B} = 4}$

$|\vec{A}| = \sqrt{(2)^2 + (-2)^2 + (1)^2} = 3 \quad , \quad |\vec{B}| = \sqrt{(2)^2 + (-1)^2 + (-2)^2} = 3$

$\cos\theta = \dfrac{\vec{A} \cdot \vec{B}}{|\vec{A}||\vec{B}|} = \dfrac{4}{(3)(3)} \Longrightarrow \boxed{\cos\theta = \dfrac{4}{9}}$

(b) (15 pts.) Find the vector product $\vec{B} \times \vec{C}$, its magnitude and the sine of the angle (ϕ) between these two vectors.

$$\begin{aligned} \vec{B} \times \vec{C} &= (2\hat{\imath} - \hat{\jmath} - 2\hat{k}) \times (-\hat{\imath} + 2\hat{\jmath} + 2\hat{k}) \\ &= [(-1)(2) - (-2)(2)]\hat{\imath} + [(-2)(-1) - (2)(2)]\hat{\jmath} + [(2)(2) - (-1)(-1)]\hat{k} \end{aligned}$$

$$\Longrightarrow \boxed{\vec{B} \times \vec{C} = 2\hat{\imath} - 2\hat{\jmath} + 3\hat{k}}$$

$|\vec{C}| = \sqrt{(-1)^2 + (2)^2 + (2)^2} = 3 \quad , \quad \sin\phi = \dfrac{|\vec{B} \times \vec{C}|}{|\vec{B}||\vec{C}|} = \dfrac{\sqrt{(2)^2 + (-2)^2 + (3)^2}}{(3)(3)} \Longrightarrow \boxed{\sin\phi = \dfrac{\sqrt{17}}{9}}$

(c) (10 pts.) Find the mixed product $\vec{A} \cdot (\vec{B} \times \vec{C})$

$\vec{A} \cdot (\vec{B} \times \vec{C}) = (2\hat{\imath} - 2\hat{\jmath} + \hat{k}) \cdot (2\hat{\imath} - 2\hat{\jmath} + 3\hat{k}) = (2)(2) + (-2)(-2) + (1)(3)$

$\Longrightarrow \boxed{\vec{A} \cdot (\vec{B} \times \vec{C}) = 11}$

Problem 2 (40 points)

A shuttle bus is moving with a speed of 108 km/h on a straight segment of Sile road through the university. Since the driver is busy with his cell phone, he could not notice the truck which is moving in the same direction as the shuttle and slowing down with 2.0 m/s^2. At the moment he applies the brakes, the initial speed of the truck is 72 km/h, the distance between the shuttle and the truck is 48 m, and the shuttle starts to slow down with an acceleration of 1.0 m/s^2.

Take the initial position of the truck as zero.

(a) (20 pts.)What are the speeds of both the shuttle and the truck when the shuttle crashes the truck? *(Give your answers in* m/s.)

Initial contitions:

- Shuttle: $x_0^s = -48$m, $v_0^s = 108$km/h$= 30$m/s and $a^s = -1$m/s^2.
- Truck: $x_0^t = 0$, $v_0^t = 72$km/h$= 20$m/s and $a^s = -2$m/s^2.

They will collide when they are at the same position at the sime time. So we have to calculate their positions using: $x(t) = x_0 + v_{0,x}t + at^2/2$.

$x_0^s + v_0^s t + a^s t^2/2 = x_0^t + v_0^t t + a^t t^2/2 \rightarrow -48 + 30t - 0.5t^2 = 0 + 20t - 1t^2 \rightarrow t^2 + 20t - 96 = 0$
$(t + 24)(t - 4) = 0 \rightarrow \boxed{t = 4 \text{ s}}$.
The speeds of both after 4 seconds can be calculated by using: $v_x(t) = v_{0,x} + at$.
Shuttle: $v_x^s(4s) = 30 - 1 \times 4 = 26$m/s.
Truck: $v_x^t(4s) = 20 - 2 \times 4 = 12$m/s.

(b) (20 pts.) Will there be a collision, if the driver of the bus obeys **the speed limits** and travels with 80 km/h ($\simeq$22 m/s) and notices the truck when the distance is 150 meters? Assume that the truck will not move again once it stops.
(Do not answer YES or NO only. Calculate some physical quantities and prove that there will/won't be a collision.)

Initial contitions:

- Shuttle: $x_0^s = -150$m, $v_0^s = 80$km/h$= 22$m/s and $a^s = -1$m/s^2.
- Truck: $x_0^t = 0$, $v_0^t = 72$km/h$= 20$m/s and $a^s = -2$m/s^2.

In this case, the truck will stop in 10 seconds ($v_x^t = 0 = 20 - 2 \times t_t \rightarrow t_t = 10$s). The position of the truck after 10 seconds will be $x^t(10s) = 20 \times 10 - 2 \times 10^2/2 = 100$ meters.

The shuttle will stop in 22 seconds ($v_x^s = 0 = 22 - 1 \times t_s \rightarrow t_s = 22$s). The position of the shuttle after 22 seconds will be $x^s(22s) = -150 + 22 \times 22 - 1 \times 22^2/2 = 92$ meters. Since the shuttle stops 8 meters behind the truck, there will be NO collision!

THIS IS WHY ONE SHOULD OBEY THE SPEED LIMITS AND SHOULD NOT USE CELL PHONES WHILE DRIVING! PLEASE BE CAREFUL WHILE TRAVELLING.

Problem 3 (40 points)

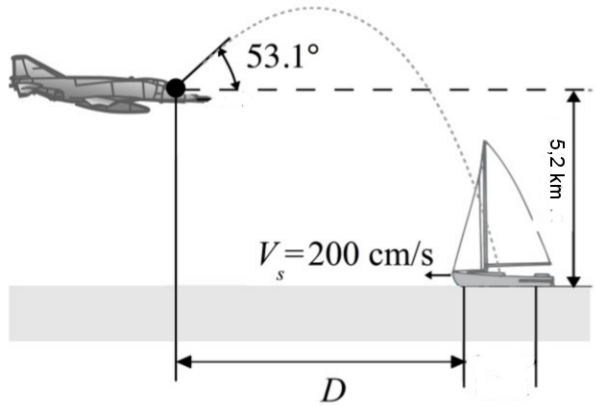

A first-aid equipment is to be delivered by a plane to a ship which is approaching to the plane with a speed of 200 cm/s while the plane is 5.2 km above the ground. At t=0 the slingshot throws the equipment at an angle of 53.1° above the horizontal and the equipment reachs the ship in 20 seconds. *(take $g = 10$ m/s^2.)*

The speed of the eqipment when its first fired is: $|\vec{v_0}| = v_0$ and $v_{0,x} = v_0 \cos 53.1 = 0.6v_0$, and $v_{0,y} = v_0 \sin 53.1 = 0.8v_0$. The initial position of the aid: $x_0^a = 0$ and $y_0^a = 5.2\text{km} = 5200\text{m}$. The final positions of the aid and the ship are the same and: $x_f = 0.6v_0 t$ and $y_f = 0$.

(a) (10 pts.) Find the speed of the equipment when its fired.

Start with the y-component of the motion of the aid. Use $y(t) = y_0 + v_{0,y}t + at^2/2$ formula. We know that when t=20 seconds, the aid reaches the ship.

$y^{aid}(20s) = 0 = 5200 + 0.8v_0 20 - 5(20)^2 \rightarrow \boxed{v_0 = 200m/s}$.

(b) (15 pts.) For the equipment to land on the ship, determine the <u>minimum</u> value of D (the horizontal distance between the head of the plane and front of the ship at t=0).

The minimum value is sum of the horizontal distances travelled by the ship and the aid in 20 seconds.

$|x_f - x_i|_{aid} = D_{aid} = 0.6v_0 20 = 2400$ meters. $|x_f - x_i|_{ship} = D_{ship} = 2(20) = 40$ meters. Thus $\boxed{D = 2440 \text{ meters}}$

(c) (15 pts.) Calculate the average velocity vector of the equipment during its projectile. Give your answer in unit vector notation.

Average velocity vector of the aid: $\vec{v^a}_{av} = v_x^a \hat{\imath} + v_y^a \hat{\jmath}$.

$v_x^a = \dfrac{2400 - 0}{20 - 0} = 120$ m/s and $v_y^a = \dfrac{0 - 5200}{20 - 0} = -260$ m/s. Thus $\boxed{\vec{v^a}_{av} = 120\hat{\imath} - 260\hat{\jmath} \text{ m/s}}$.