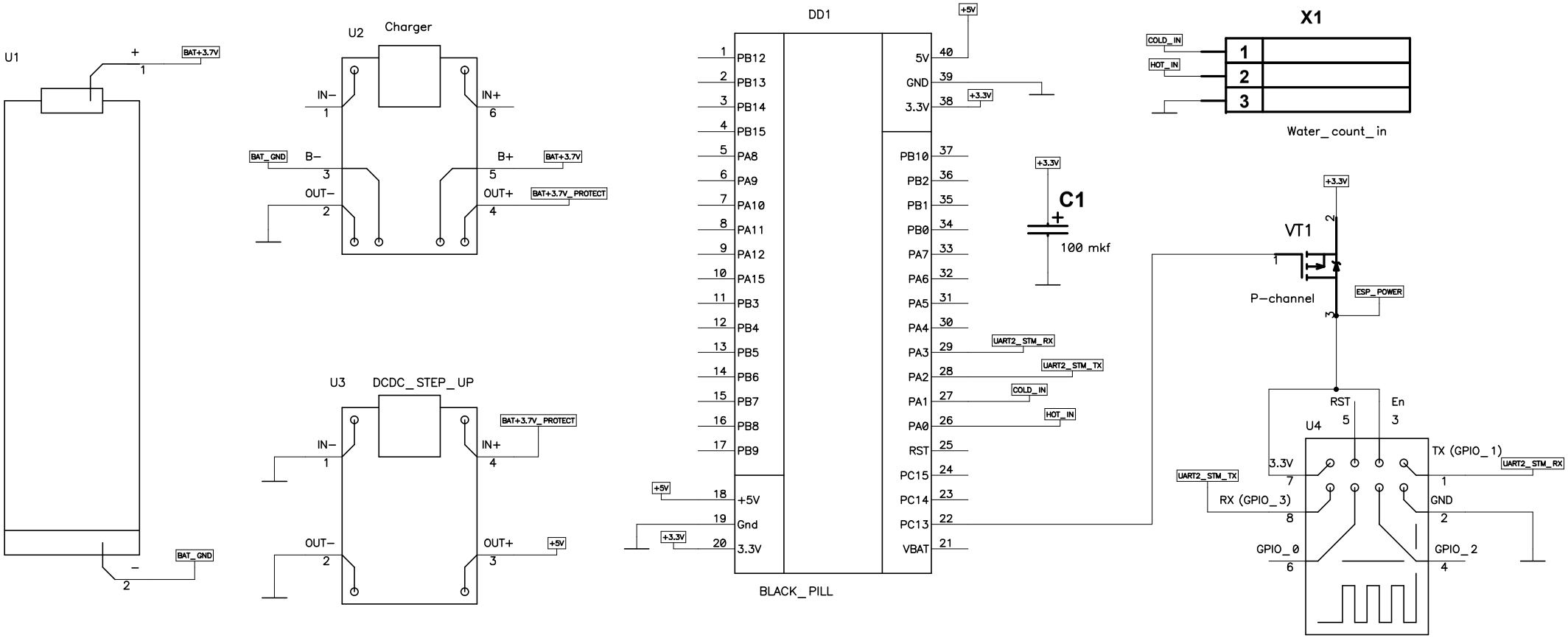
U1
+
BAT+3.7V
1
−
2
BAT_GND
U2
Charger
IN−
1
IN+
6
BAT_GND
B−
3
B+
5
BAT+3.7V
OUT−
2
OUT+
4
BAT+3.7V_PROTECT
U3
DCDC_STEP_UP
IN−
1
IN+
4
BAT+3.7V_PROTECT
OUT−
2
OUT+
3
+5V
DD1
1 PB12
2 PB13
3 PB14
4 PB15
5 PA8
6 PA9
7 PA10
8 PA11
9 PA12
10 PA15
11 PB3
12 PB4
13 PB5
14 PB6
15 PB7
16 PB8
17 PB9
18 +5V
19 Gnd
20 3.3V
+5V
+3.3V
5V 40
GND 39
3.3V 38
PB10 37
PB2 36
PB1 35
PB0 34
PA7 33
PA6 32
PA5 31
PA4 30
PA3 29
PA2 28
PA1 27
PA0 26
RST 25
PC15 24
PC14 23
PC13 22
VBAT 21
UART2_STM_RX
UART2_STM_TX
COLD_IN
HOT_IN
BLACK_PILL
+3.3V
C1
100 mkf
X1
COLD_IN
HOT_IN
1
2
3
Water_count_in
+3.3V
VT1
P−channel
ESP_POWER
RST
5
En
3
U4
3.3V
7
TX (GPIO_1)
1
UART2_STM_RX
UART2_STM_TX
RX (GPIO_3)
8
GND
2
GPIO_0
6
GPIO_2
4