Power

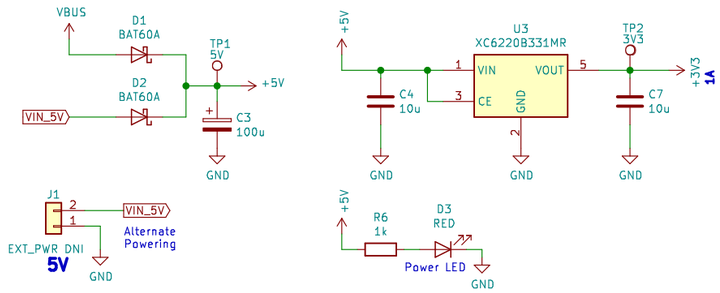

ESP32-PICO

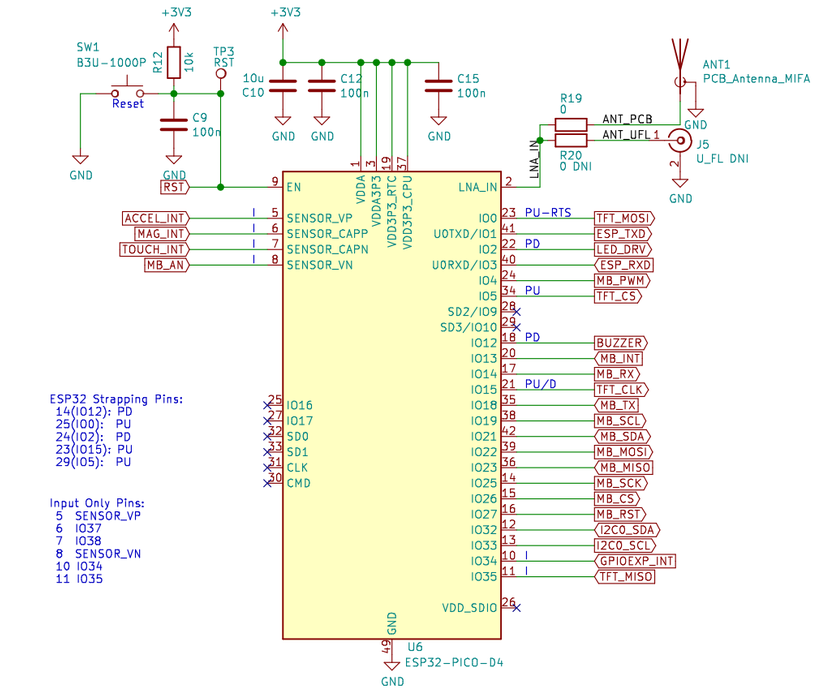

Buzzer

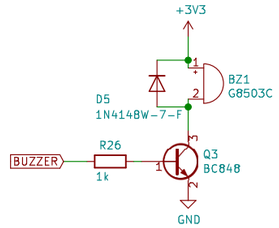

Touch (optional)

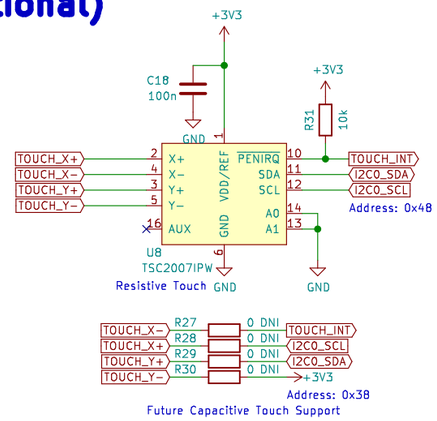

USB - Power & Debug

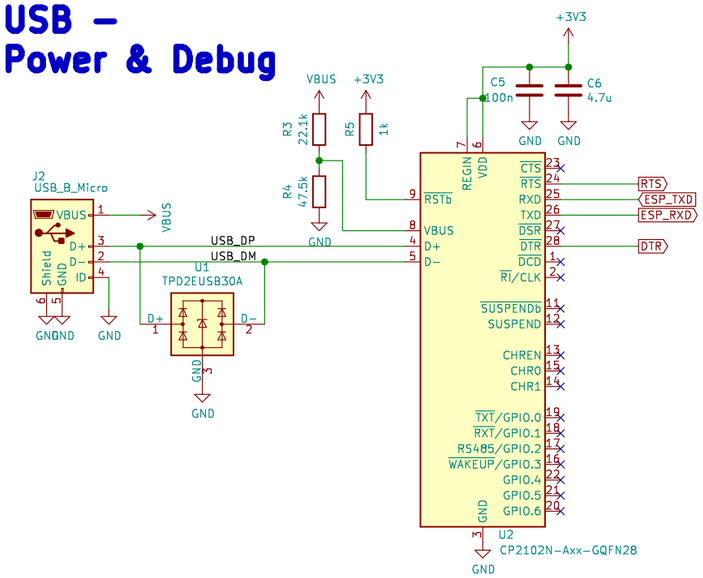

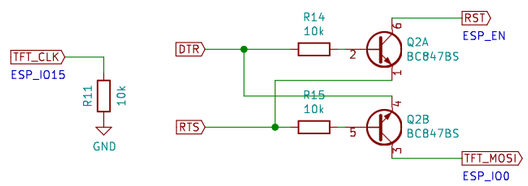

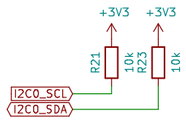

mikroBUS

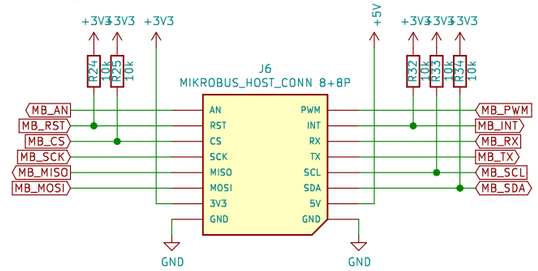

TFT

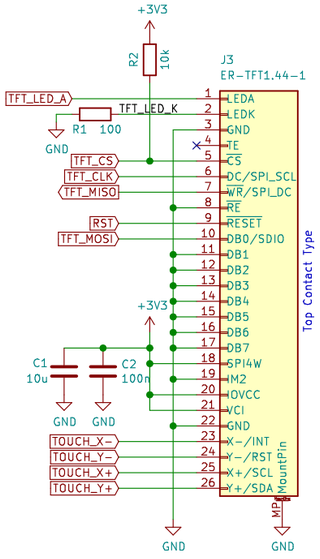

RGB LED

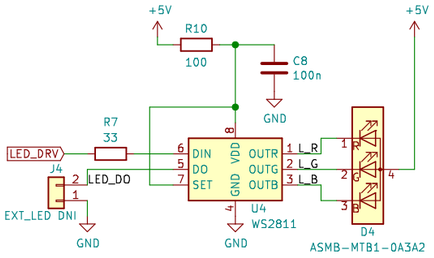

TFT Backlight

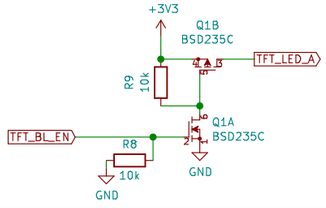

Motion Sensor

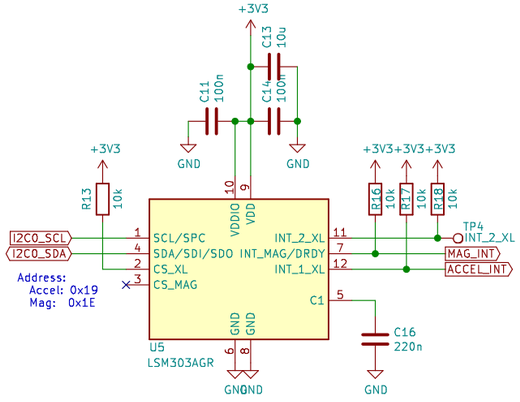

Buttons

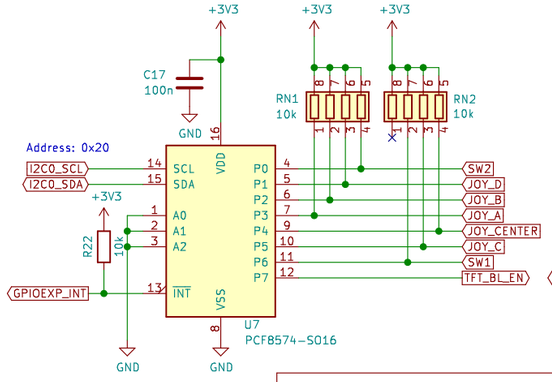

TP5 TP6 TP7
GND GND GND
GNDGNDGND

LTimko
laszlo.timko@bayzoltan.hu
Bay Zoltan Nonprofit Ltd.

Sheet: /
File: baybit.sch

Title: BAYBIT

Size: A3	Date:	Rev: A0
KiCad E.D.A. kicad 5.1.5-52549c584ubuntu18.04.1		Id: 1/1