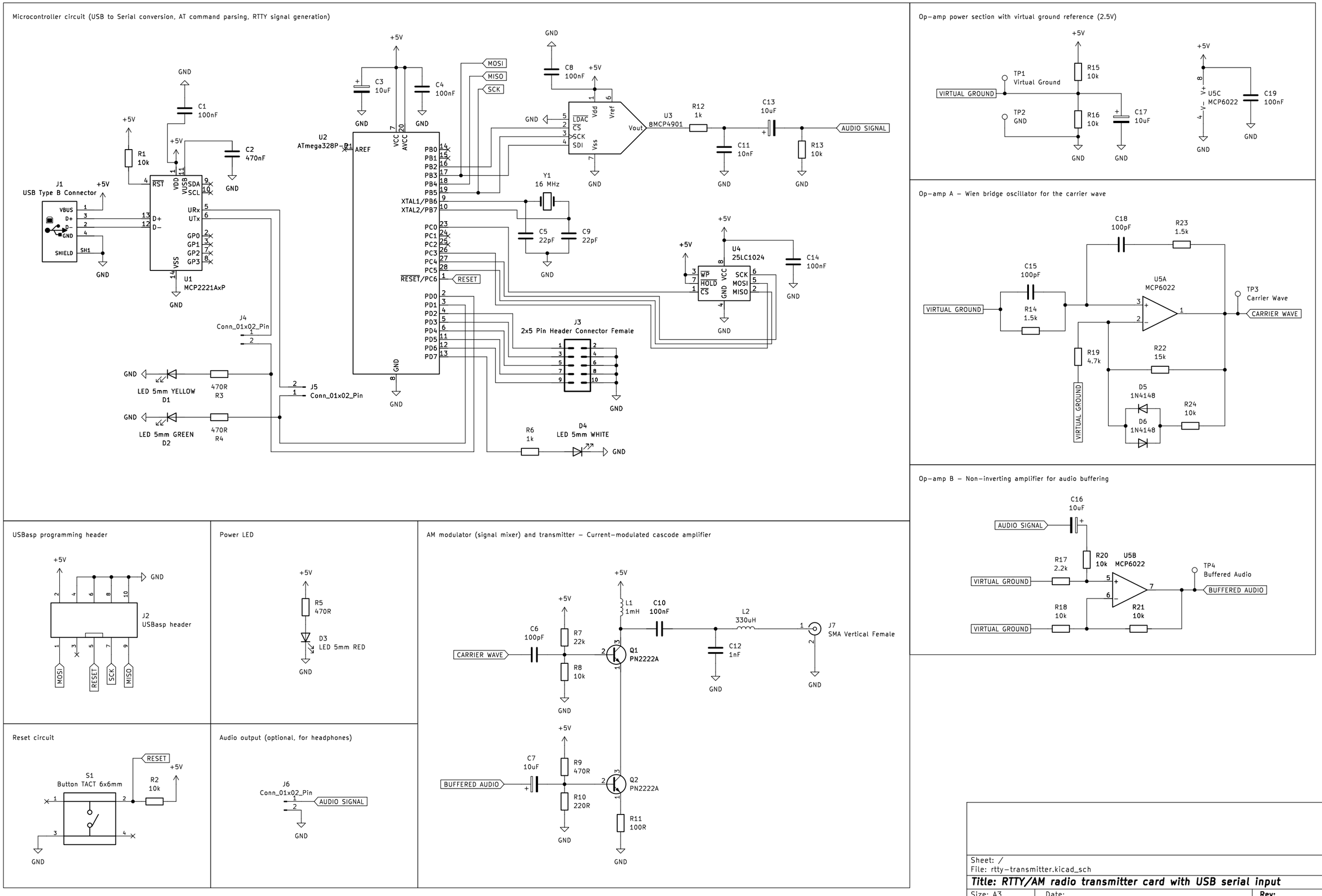

Sheet: /
File: rtty-transmitter.kicad_sch

Title: RTTY/AM radio transmitter card with USB serial input

Size: A3	Date:	Rev:
KiCad E.D.A. 9.0.7		Id: 1/1