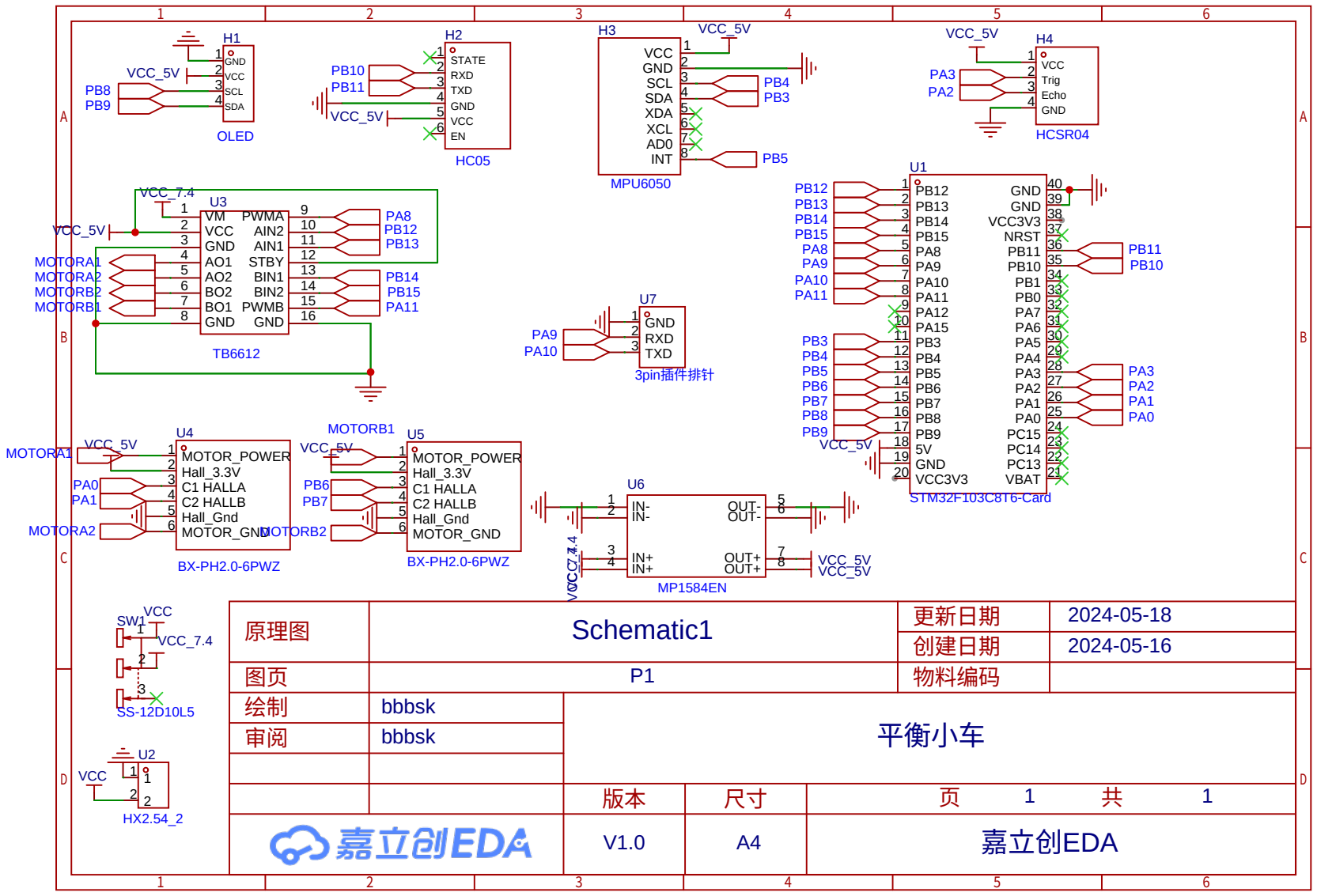
H1
GND
VCC
SCL
SDA
OLED
VCC_5V
PB8
PB9
H2
STATE
RXD
TXD
GND
VCC
EN
HC05
PB10
PB11
VCC_5V
H3
VCC
GND
SCL
SDA
XDA
XCL
AD0
INT
MPU6050
VCC_5V
PB4
PB3
PB5
H4
VCC
Trig
Echo
GND
HCSR04
VCC_5V
PA3
PA2
U3
VM
VCC
GND
AO1
AO2
BO2
BO1
GND
PWMA
AIN2
AIN1
STBY
BIN1
BIN2
PWMB
GND
TB6612
VCC_7.4
VCC_5V
MOTORA1
MOTORA2
MOTORB2
MOTORB1
PA8
PB12
PB13
PB14
PB15
PA11
U7
GND
RXD
TXD
3pin插件排针
PA9
PA10
U1
PB12
PB13
PB14
PB15
PA8
PA9
PA10
PA11
PB3
PB4
PB5
PB6
PB7
PB8
PB9
5V
GND
VCC3V3
GND
GND
VCC3V3
NRST
PB11
PB10
PB1
PB0
PA7
PA6
PA5
PA4
PA3
PA2
PA1
PA0
PC15
PC14
PC13
VBAT
PB11
PB10
PA3
PA2
PA1
PA0
VCC_5V
STM32F103C8T6-Card
U4
MOTORA1
VCC_5V
MOTOR_POWER
Hall_3.3V
C1 HALLA
C2 HALLB
Hall_Gnd
MOTOR_GND
PA0
PA1
MOTORA2
BX-PH2.0-6PWZ
MOTORB1
VCC_5V
U5
MOTOR_POWER
Hall_3.3V
C1 HALLA
C2 HALLB
Hall_Gnd
MOTOR_GND
PB6
PB7
MOTORB2
BX-PH2.0-6PWZ
U6
IN-
IN-
IN+
IN+
OUT-
OUT-
OUT+
OUT+
MP1584EN
VCC_7.4
VCC_5V
VCC_5V
SW1
VCC
VCC_7.4
SS-12D10L5
U2
VCC
HX2.54_2
原理图
Schematic1
更新日期
2024-05-18
创建日期
2024-05-16
图页
P1
物料编码
绘制
bbbsk
审阅
bbbsk
平衡小车
版本
尺寸
页 1 共 1
V1.0
A4
嘉立创EDA
嘉立创EDA