Outdoor Classroom Report

Historical Eleutherian College, Inc.

Ben Hardin

Summer 2021

Phase 1: Design

About 12 Hours

The first phase started with creating a design for the classroom. I looked up images of similar learning areas online and determined that we wanted amphitheater-style bench seating with desks for writing. I also added a podium at the front. I created a rough sketch of the design and discussed it with Emeka Koren to determine if the design fit his needs concerning the layout and number of seats. Next, I began budgeting to determine what could be built within the maximum $2500 budget. I determined that we would not be able to afford metal benches, tables, or posts. The option that would allow us to build the largest classroom was using wood to construct the benches and tables ourselves.

I created a comprehensive materials list. I priced the materials to determine if we would need to request the full $2500 grant amount. Ultimately, I'm glad that I left space for unexpected costs by requesting the full $2500 since lumber prices skyrocketed at the time of construction. Next, I created a comprehensive budget and grant proposal for Lilly Scholars Network to review.

Phase 2: Preparations

About 13 Hours

The second phase started by walking the land with Emeka Koren and Jan Vetrhus. We staked out where we wanted the classroom and what paths would be nice to reach the classroom. We decided the learning area would be in a patch of brush that had several large trees but had been cleared in the past. It provided a secluded spot between the college building and the house on the west of the property. Several large trees provide shade from the sun but don't crowd the area.

I developed a finalized materials list that minimized the waste from each board and minimized the number of screws and bolts needed. We prioritized reducing waste over increased cost of purchasing boards of special sizes.

Emeka and I determined that recycled plastic lumber would be a great addition for the tabletops, providing a smoother writing surface and an environmentally friendly

alternative to treated lumber. Unfortunately, the budget would not allow for all boards to be made of plastic lumber.

My dad, Doug Hardin, and I drove to Menards to purchase materials. We used our pickup truck and trailer to bring the materials back to our house. Plastic lumber had to be special ordered online and did not arrive until mid-August. We repeated the process to pick up that lumber then. Finally, we mapped out what cuts to make on what boards so we would be ready to cut and assemble.

Phase 3: Construction

About 63 Hours

This phase started with setting up a saw and cutting the boards as specified. This allowed us to pull from a pile of resources to build each bench like it was a kit. This phase was completed at my house so that we would have access to power tools and could store the materials in a locked garage. Once all the pieces were cut, each bench was assembled except for some of the plastic lumber table tops that would not arrive until later. Holes were drilled in the large 6”x6” posts for bolts to run through and provide extra support. All other boards were screwed together. We decided to run angled braces underneath the benches and desks for extra support.

Phase 4: Installation

About 70 Hours

Once the benches and tables were constructed, we delivered them to the site using a friend's flatbed trailer. Next, we needed to get wood chips to spread around the area. A local church had cleared trees off their land and allowed us to come get woodchips that they were going to burn. A friend volunteered to use his tractor to scrape up the wood chips, load them onto our trailer, and offload them at the college.

Next, the staked-out area from Phase 2 was cleared using my family's tractor and bushhog since our farm was conveniently located nearby on State Road 250. We cleared an area for the classroom with some extra space for us to navigate as well as a path to the college building and a path to the house on the property where bathrooms are located. We fell a dead tree and moved it to the woods.

We marked where in the cleared area we wanted the classroom. Once we had an outline, we marked exact spots to drill holes for the bench and table posts. We rented a 2-man auger from TNT Tool and Equipment Rental and drilled the holes that we had marked out. We used a posthole digger to adjust the holes as needed and filled the bottom of the holes with gravel from Tandy's Trucking and Excavating to help water drain away from the posts. We dropped the benches and tables into the holes and leveled them with gravel. Once all 37 holes had been drilled and 18 benches and tables and 1 podium were installed, we spread landscape fabric around the area to prevent weeds from growing. Next, we used our Gator ATV to dump mulch around the area. We spread the mulch with rakes to completely cover the fabric.

We used our pole saw to trim some trees around the learning area and the gravel lane to the property. This improved the property's appearance and made the main college more visible as one enters the lane. We had extra gravel and used our tractor to spread it on the lane and fill in areas that were washed out.

Finally, when the remaining plastic lumber was delivered in mid-August, we cut those boards and installed them on the tables.

Conclusion

Total Hours: 158.5

People who brought this project to life:

Ben Hardin	Emeka Koren	Steve Bertram
Doug Hardin	Jan Vetrhus	Matt Judy
Tricia Hardin	Mark Bahlke	

Gallery

Design Sketches

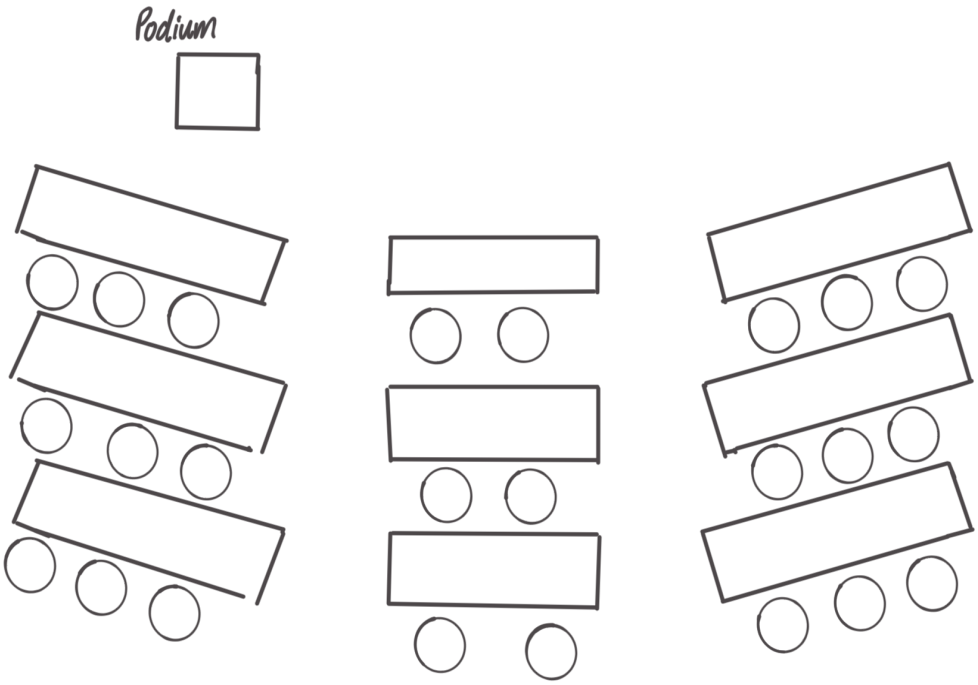

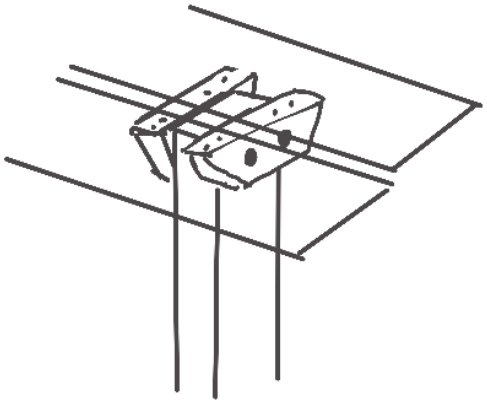

Construction

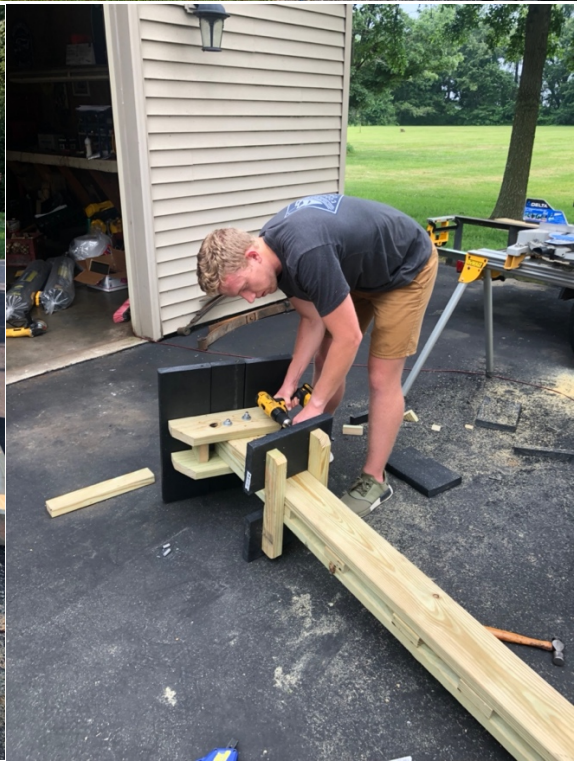

Installation

TRAIL
TERRITORY