Lecture 10: cache coherency

cache memory hierarchy, cache coherency protocol, store-buffer, load-buffer, invalidate-queue, memory barrier, hardware memory model, weak memory model, litmus tests

Alexander Filatov
filatovaur@gmail.com

https://github.com/Svazars/parallel-programming/blob/main/slides/pdf/l10.pdf

In previous episodes

Concurrency domain

- Communicating agents (threads)
- Different speed of execution and non-deterministic interleavings (OS scheduler)
- Problems with proper synchronization – race conditions, deadlocks
- Key properties: Safety (correctness), Liveness (progress), Performance

Formalization of concurrent execution

- Timeline, Events, Intervals, Precedence
- Consistency, Linearizability, Linearization points
- Progress conditions: wait-free, lock-free, obstruction-free, starvation-free, deadlock-free
- Atomic register, Snapshot, Consensus number

Practical aspects

- Read-Modify-Write operations
- Memory bus, Cache hierarchy, Cache coherence
- Lock-free algorithms and ABA problem

Warning: lecture today is going to be like

Warning: lecture today is going to be like

Warning: lecture today is going to be like

Warning: lecture today is going to be like

Supplementary materials

Unconditional benefit

- "Memory Barriers: a Hardware View for Software Hackers"[1]
- "What Every Programmer Should Know About Memory"[2]
- "Слабые модели памяти: буферизации записи на x86"[3]

Advanced material

- "A Tutorial Introduction to the ARM and POWER Relaxed Memory Models"[4]
- "Shared Memory Consistency Models: A Tutorial"[5]

Mechanical sympathy (better understand h/w design):

- "Digital Design and Computer Architecture" by David Money Harris, Sarah L. Harris[6]

[1] https://www.researchgate.net/publication/228824849_Memory_Barriers_a_Hardware_View_for_Software_Hackers
[2] https://people.freebsd.org/~lstewart/articles/cpumemory.pdf
[3] https://habr.com/ru/companies/JetBrains-education/articles/523298
[4] https://www.cl.cam.ac.uk/~pes20/ppc-supplemental/test7.pdf
[5] https://dl.acm.org/doi/10.1109/2.546611
[6] https://www.amazon.com/Digital-Design-Computer-Architecture-Harris/dp/0123944244

Lecture plan

1. Preliminary discussion
2. Cache coherency
3. Hardware optimizations
   - Store buffering
   - Load buffering
   - Optional: Invalidate Queues
   - Interconnect topology
4. Hardware memory model
5. Memory barriers
6. Litmus tests
7. Summary

Global memory: 1 CPU

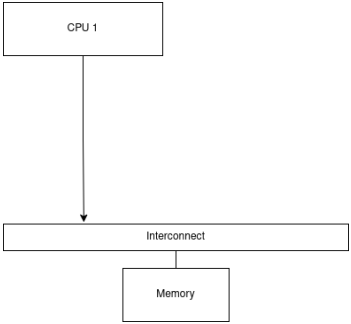

Global memory: 2 CPU

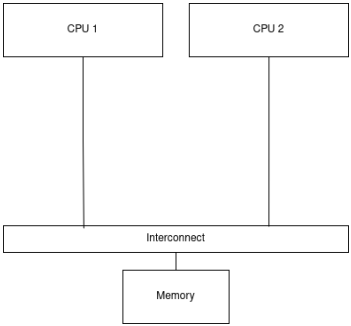

Global memory: 2 CPU

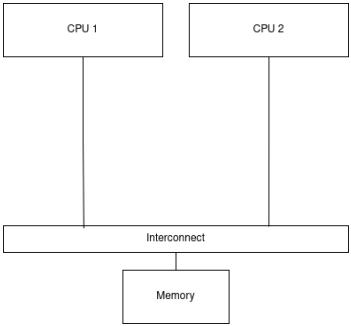

Any problem here?

Global memory: 2 CPU

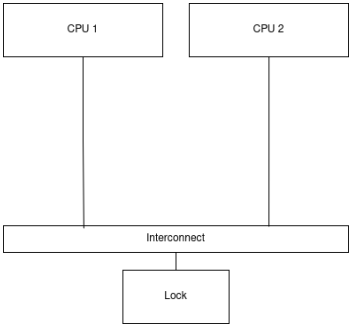

Global memory: 2 CPU

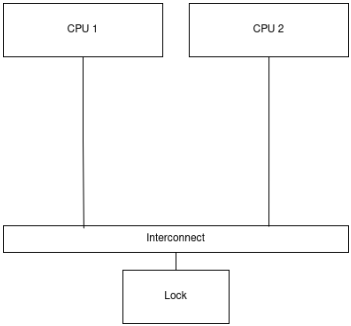

Any problem here?

Global memory: fine-grained locking

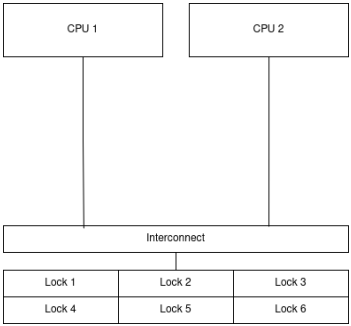

Global memory: fine-grained locking

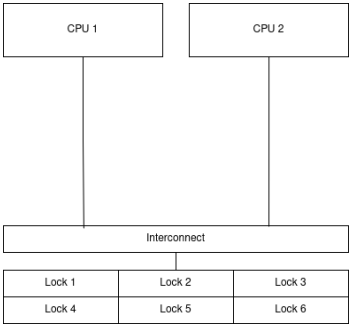

Cache line

- contiguous chunk of memory (e.g 64, 128, 256 bytes)
- auxiliary data associated with the chunk

Global memory: fine-grained locking

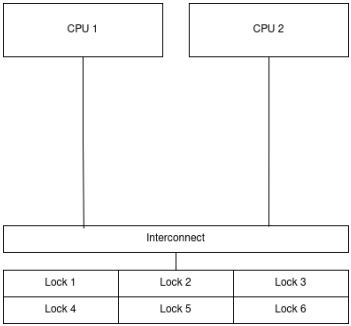

What is optimal cache line size?

Global memory: fine-grained locking

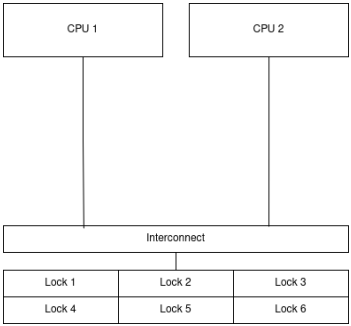

What is optimal cache line size?

- too large – **false sharing** (access to independent data cause performance loss)
- too small – overhead for storing meta information

Global memory: fine-grained locking

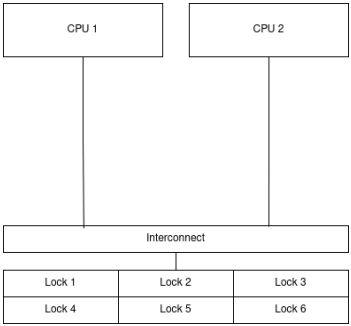

Any problem here?

Global memory: fine-grained locking for read-mostly data

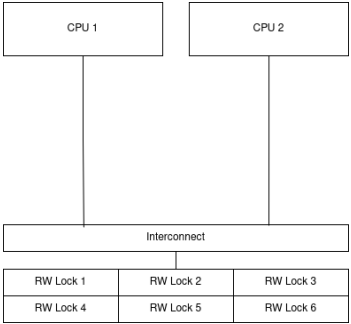

Global memory: fine-grained locking for read-mostly data

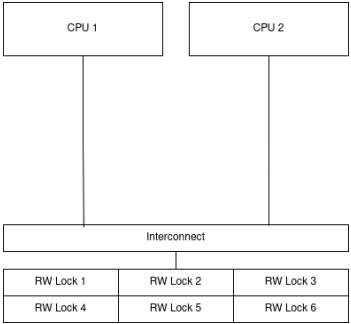

Is it consistent?

Global memory: fine-grained locking for read-mostly data

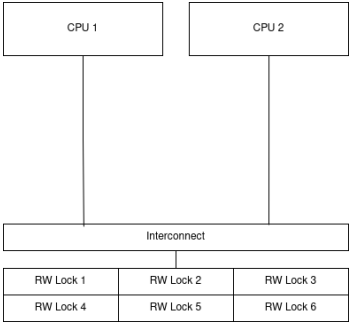

- **Coherence**: in any execution, for each location, there is a single linear order of all writes to that location which must be respected by all threads

Global memory: fine-grained locking for read-mostly data

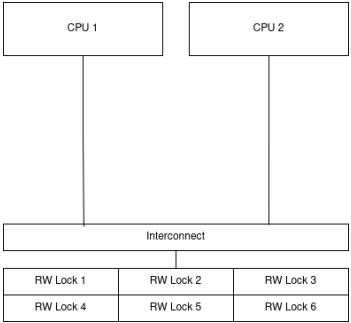

- **Coherence**: in any execution, for each location, there is a single linear order of all writes to that location which must be respected by all threads

What?

Coherency: CoRR1 sample

- **Coherence**: in any execution, for each location, there is a single linear order of all writes to that location which must be respected by all threads

Coherency: CoRR1 sample

- **Coherence**: in any execution, for each location, there is a single linear order of all writes to that location which must be respected by all threads

Initial state: `x = 1`

```
void threadA() {
      x = 2;
}
```

```
void threadB() {
    int r1 = x;
    int r2 = x;
}
```

Coherency: CoRR1 sample

- **Coherence**: in any execution, for each location, there is a single linear order of all writes to that location which must be respected by all threads

Initial state: `x = 1`

```
void threadA() {
      x = 2;
}
```

```
void threadB() {
    int r1 = x;
    int r2 = x;
}
```

`Forbidden: r1 = 2, r2 = 1`

Coherency: CoRR1 sample

- **Coherence**: in any execution, for each location, there is a single linear order of all writes to that location which must be respected by all threads

Initial state: `x = 1`

```
void threadA() {
      x = 2;
}
```

```
void threadB() {
    int r1 = x;
    int r2 = x;
}
```

`Forbidden: r1 = 2, r2 = 1`

Several other executions of the same code are allowed:

- both Thread B reads could read 1
- both Thread B reads could read 2
- first could read 1 and the second 2

Coherency: CoRR2 sample

- **Coherence**: in any execution, for each location, there is a single linear order of all writes to that location which must be respected by all threads

Coherency: CoRR2 sample

- **Coherence**: in any execution, for each location, there is a single linear order of all writes to that location which must be respected by all threads

Initial state: `x = 0`

thread1	thread2	thread3	thread4
`x = 1`	`x = 2`	`r1 = x`	`r3 = x`
		`r2 = x`	`r4 = x`

Coherency: CoRR2 sample

- **Coherence**: in any execution, for each location, there is a single linear order of all writes to that location which must be respected by all threads

Initial state: `x = 0`

thread1	thread2	thread3	thread4
`x = 1`	`x = 2`	`r1 = x`	`r3 = x`
		`r2 = x`	`r4 = x`

`Forbidden: r1 = 2, r2 = 1, r3 = 1, r4 = 2`

Global memory: fine-grained locking for read-mostly data

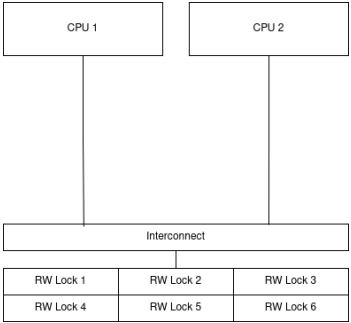

- **Coherence**: in any execution, for each location, there is a single linear order of all writes to that location which must be respected by all threads

Global memory: fine-grained locking for read-mostly data

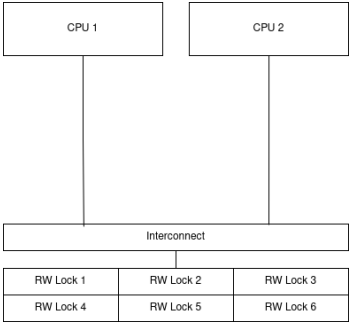

- **Coherence**: in any execution, for each location, there is a single linear order of all writes to that location which must be respected by all threads

What about two locations?

Global memory: fine-grained locking for read-mostly data

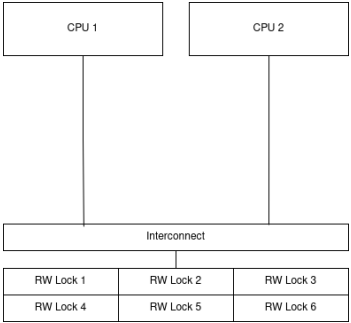

- **Coherence**: in any execution, for each location, there is a single linear order of all writes to that location which must be respected by all threads

What about two locations?

- No ordering required, no linearizability assumed

Global memory: fine-grained locking for read-mostly data

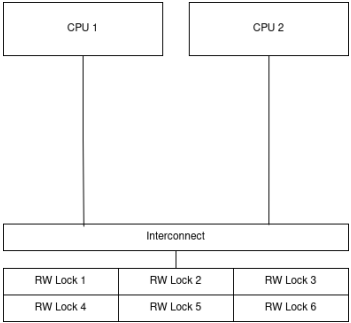

- **Coherence**: in any execution, for each location, there is a single linear order of all writes to that location which must be respected by all threads

What about two locations?

- No ordering required, no linearizability assumed

What?

Coherency is about single memory cell

- **Coherence**: in any execution, for each location, there is a single linear order of all writes to that location which must be respected by all threads

Coherency is about single memory cell

- **Coherence**: in any execution, for each location, there is a single linear order of all writes to that location which must be respected by all threads

Initial state: `x = 1, y = 1`

```
void threadA() {
      x = 2;
      y = 2;
}
```

```
void threadB() {
    int r1 = x;
    int r2 = y;
}
```

```
void threadC() {
    int r3 = y;
    int r4 = x;
}
```

Coherency is about single memory cell

- **Coherence**: in any execution, for each location, there is a single linear order of all writes to that location which must be respected by all threads

Initial state: `x = 1, y = 1`

```
void threadA() {
    x = 2;
    y = 2;
}
```

```
void threadB() {
    int r1 = x;
    int r2 = y;
}
```

```
void threadC() {
    int r3 = y;
    int r4 = x;
}
```

Allowed: `r1 = 2, r2 = 1, r3 = 2, r4 = 1`

Coherency is about single memory cell

- **Coherence**: in any execution, for each location, there is a single linear order of all writes to that location which must be respected by all threads

Initial state: `x = 1, y = 1`

```
void threadA() {
    x = 2;
    y = 2;
}
```

```
void threadB() {
    int r1 = x;
    int r2 = y;
}
```

```
void threadC() {
    int r3 = y;
    int r4 = x;
}
```

`Allowed: r1 = 2, r2 = 1, r3 = 2, r4 = 1`

Important:

- "each location has single linear order of all writes" **does not imply** orders of independent locations are "aligned"

Coherency is about single memory cell

- **Coherence**: in any execution, for each location, there is a single linear order of all writes to that location which must be respected by all threads

Initial state: `x = 1, y = 1`

```
void threadA() {
    x = 2;
    y = 2;
}
```

```
void threadB() {
    int r1 = x;
    int r2 = y;
}
```

```
void threadC() {
    int r3 = y;
    int r4 = x;
}
```

`Allowed: r1 = 2, r2 = 1, r3 = 2, r4 = 1`

Important:

- "each location has single linear order of all writes" **does not imply** orders of independent locations are "aligned"
- **Coherence** is weaker than linearizability

Idea

- **Coherence** is weaker than linearizability

Idea

- **Coherence** is weaker than linearizability

Let's reorder independent memory operations to improve performance of the CPU!

Idea

- **Coherence** is weaker than linearizability

Let's reorder independent memory operations to improve performance of the CPU!
Every single-threaded program will become faster!

Idea

- **Coherence** is weaker than linearizability

Let's reorder independent memory operations to improve performance of the CPU!
Every single-threaded program will become faster!
Who cares that concurrent software will misbehave, right?

Relaxing memory ordering guarantees

```
static int x, y;
void foo() {
  int r1 = x;
  int r2 = y;
}
```

Relaxing memory ordering guarantees

```
static int x, y;
void foo() {
  int r1 = memory.read(x);
  int r2 = memory.read(y);
}
```

Relaxing memory ordering guarantees

```
static int x, y;
void foo() {
  int r1 = memory.read(x);
  int r2 = memory.read(y);
}
```

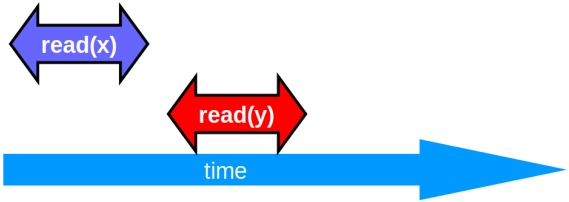

Relaxing memory ordering guarantees

```
static int x, y;
void foo() {
  Future<int> r1 = memory.read(x);
  Future<int> r2 = memory.read(y);
}
```

Relaxing memory ordering guarantees

```
static int x, y;
void foo() {
  Future<int> r1 = memory.read(x);
  Future<int> r2 = memory.read(y);
  ...

  use(r2.get());
  ...
  use(r1.get());
}
```

Relaxing memory ordering guarantees

```
static int x, y;
void foo() {
  Future<int> r1 = memory.read(x);
  Future<int> r2 = memory.read(y);
  ...

  use(r2.get());
  ...
  use(r1.get());
}
```

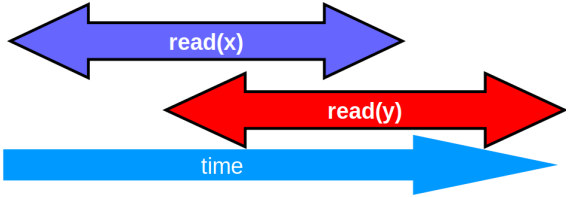

Relaxing memory ordering guarantees

```
static int x, y;
void foo() {
  Future<int> r1 = memory.read(x);
  Future<int> r2 = memory.read(y);
  ...

  use(r2.get());
  ...
  use(r1.get());
}
```

- Improve efficiency and CPU utilization – faster
- Sacrifice consistency – harder to reason about correctness

Implementing hardware memory: challenges

- Provide efficient and scalable hardware implementation of shared memory

Implementing hardware memory: challenges

- Provide efficient and scalable hardware implementation of shared memory
- Maintain consistency of single memory cell – **coherency**

Implementing hardware memory: challenges

- Provide efficient and scalable hardware implementation of shared memory
- Maintain consistency of single memory cell – **coherency**
- Allow to reorder operations on independent memory cells – **relaxed memory model**

Implementing hardware memory: challenges

- Provide efficient and scalable hardware implementation of shared memory
- Maintain consistency of single memory cell – **coherency**
- Allow to reorder operations on independent memory cells – **relaxed memory model**

Our plan:

Implementing hardware memory: challenges

- Provide efficient and scalable hardware implementation of shared memory
- Maintain consistency of single memory cell – **coherency**
- Allow to reorder operations on independent memory cells – **relaxed memory model**

Our plan:

- Look at simplified model: replication pattern for cache lines + MESI protocol

Implementing hardware memory: challenges

- Provide efficient and scalable hardware implementation of shared memory
- Maintain consistency of single memory cell – **coherency**
- Allow to reorder operations on independent memory cells – **relaxed memory model**

Our plan:

- Look at simplified model: replication pattern for cache lines + MESI protocol
- Improve it: Store buffering, Load buffering, Invalidate queue, Interconnect topology

Implementing hardware memory: challenges

- Provide efficient and scalable hardware implementation of shared memory
- Maintain consistency of single memory cell – **coherency**
- Allow to reorder operations on independent memory cells – **relaxed memory model**

Our plan:

- Look at simplified model: replication pattern for cache lines + MESI protocol
- Improve it: Store buffering, Load buffering, Invalidate queue, Interconnect topology
- Repair multi-cell consistency using memory barriers

Implementing hardware memory: challenges

- Provide efficient and scalable hardware implementation of shared memory
- Maintain consistency of single memory cell – **coherency**
- Allow to reorder operations on independent memory cells – **relaxed memory model**

Our plan:

- Look at simplified model: replication pattern for cache lines + MESI protocol
- Improve it: Store buffering, Load buffering, Invalidate queue, Interconnect topology
- Repair multi-cell consistency using memory barriers
- Empirically study concurrent behaviour of existing hardware via litmus tests

Lecture plan

1. Preliminary discussion
2. Cache coherency
3. Hardware optimizations
   - Store buffering
   - Load buffering
   - Optional: Invalidate Queues
   - Interconnect topology
4. Hardware memory model
5. Memory barriers
6. Litmus tests
7. Summary

Why do we need caches?

Why do we need caches?

Nanoseconds and toilet paper show

Why do we need caches?

Nanoseconds and toilet paper show

https://travisdowns.github.io/blog/2020/07/06/concurrency-costs.html
Level 2 (True Sharing)

Using caches

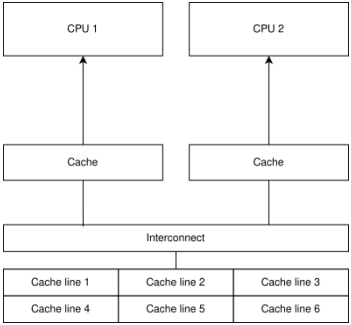

Replication pattern:

- Cache line copied to processor-local cache
- Metadata associated with every replicated cache line – state of cache line

Homework: caches and associativity

Hardware caches are quite efficient and use hardware-supported N-way associativity
"Is Parallel Programming Hard, And, If So, What Can You Do About It" (perfbook)

- Appendix B "Why Memory Barriers?" , section B.1 "Cache Structure"
- perfbook.B.1

Be ready to draw and explain what is associative hardware cache.

Distributed caching

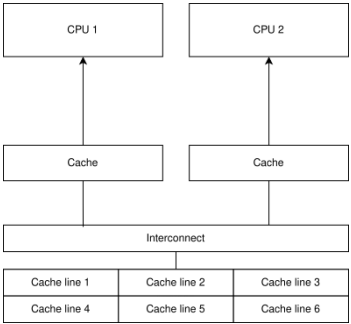

- **Coherence**: in any execution, for each location, there is a single linear order of all writes to that location which must be respected by all threads

Distributed caching

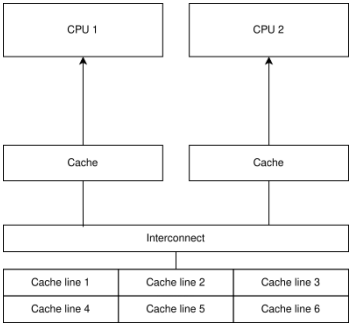

- **Coherence**: in any execution, for each location, there is a single linear order of all writes to that location which must be respected by all threads

How to implement that without locks?

Distributed caching

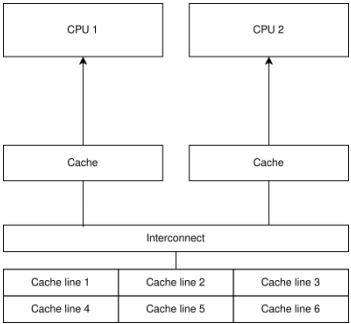

- **Coherence**: in any execution, for each location, there is a single linear order of all writes to that location which must be respected by all threads

How to implement that without locks? And without Atomic MRMW registers?

Distributed caching

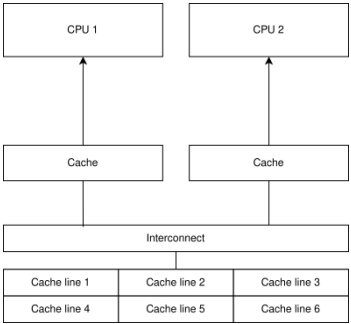

- **Coherence**: in any execution, for each location, there is a single linear order of all writes to that location which must be respected by all threads

How to implement that without locks? And without Atomic MRMW registers? Efficient?

Cache coherency: MESI

State machine:

- **Modified**
- **Exclusive**
- **Shared**
- **Invalid**

Message passing on some transitions:

- asynchronous (fire and forget)
- synchronous (cannot change state until confirmation received)

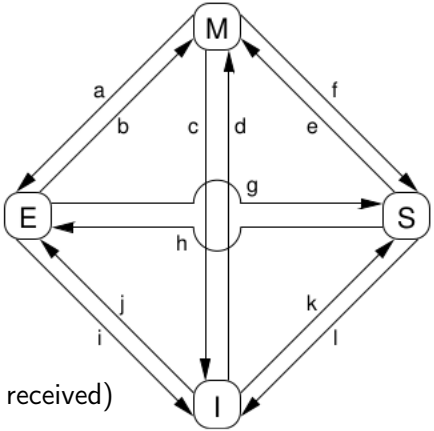

Cache coherency: message passing[7]

- Transition **(k)**: CPU loads data in a cache line that was not in its cache. Send "read", await "read response".
- Transition **(h)**: CPU realizes that it will soon need to write data in this cache line. Send "invalidate" message, await "invalidate acknowledge".
- Transition **(b)**: CPU writes to the cache line that it already had exclusive access to. Nothing to send/receive.
- Transition **(c)**: CPU receives "read invalidate" message for a cache line that it has modified. The CPU must invalidate local copy, respond with "read response" and "invalidate acknowledge".

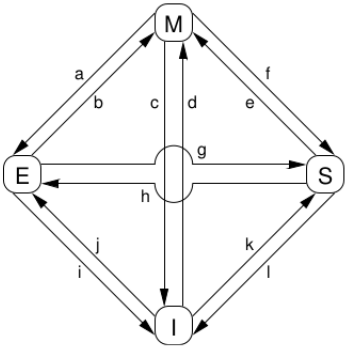

[7] perfbook B.2.3.

Homework: more complicated MESI protocol example

Homework: read perfbook.B.2.4. "MESI Protocol Example"

Sequence #	CPU #	Operation	CPU Cache				Memory	
			0	1	2	3	0	8
0		Initial State	-/I	-/I	-/I	-/I	V	V
1	0	Load	0/S	-/I	-/I	-/I	V	V
2	3	Load	0/S	-/I	-/I	0/S	V	V
3	0	Invalidation	8/S	-/I	-/I	0/S	V	V
4	2	RMW	8/S	-/I	0/E	-/I	V	V
5	2	Store	8/S	-/I	0/M	-/I	I	V
6	1	Atomic Inc	8/S	0/M	-/I	-/I	I	V
7	1	Writeback	8/S	8/S	-/I	-/I	V	V

Unnecessary stalls

- CPU 0 starts write to cache line held by CPU 1
- CPU 0 must wait for the data to arrive

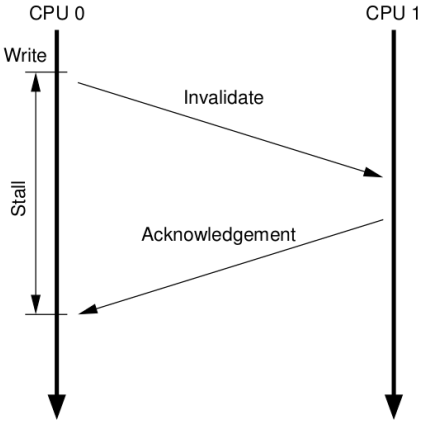

Unnecessary stalls

- CPU 0 starts write to cache line held by CPU 1
- CPU 0 must wait for the data to arrive
- Why wait? CPU 0 is going to unconditionally overwrite it!

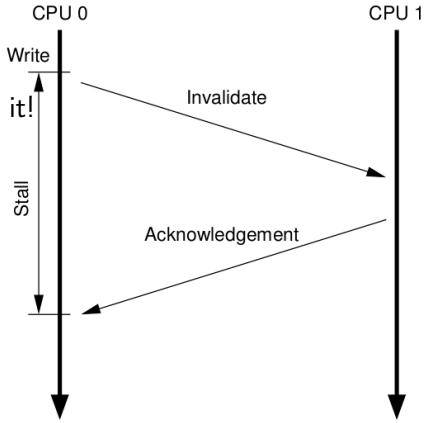

Cache coherency: takeaways

High-level ideas:

- Memory split into chunks (cache lines) with auxiliary data (cache line state)

Cache coherency: takeaways

High-level ideas:

- Memory split into chunks (cache lines) with auxiliary data (cache line state)
- Copies of cache lines could reside in main memory and in processor-specific caches

Cache coherency: takeaways

High-level ideas:

- Memory split into chunks (cache lines) with auxiliary data (cache line state)
- Copies of cache lines could reside in main memory and in processor-specific caches
- Processors communicate via memory bus and use cache coherency protocol

Cache coherency: takeaways

High-level ideas:

- Memory split into chunks (cache lines) with auxiliary data (cache line state)
- Copies of cache lines could reside in main memory and in processor-specific caches
- Processors communicate via memory bus and use cache coherency protocol
- Read/write operations change state of cache line and trigger message passing

Cache coherency: takeaways

High-level ideas:

- Memory split into chunks (cache lines) with auxiliary data (cache line state)
- Copies of cache lines could reside in main memory and in processor-specific caches
- Processors communicate via memory bus and use cache coherency protocol
- Read/write operations change state of cache line and trigger message passing

Design choices:

Cache coherency: takeaways

High-level ideas:

- Memory split into chunks (cache lines) with auxiliary data (cache line state)
- Copies of cache lines could reside in main memory and in processor-specific caches
- Processors communicate via memory bus and use cache coherency protocol
- Read/write operations change state of cache line and trigger message passing

Design choices:

- Cache line size (64, 128, 256 ...)

Cache coherency: takeaways

High-level ideas:

- Memory split into chunks (cache lines) with auxiliary data (cache line state)
- Copies of cache lines could reside in main memory and in processor-specific caches
- Processors communicate via memory bus and use cache coherency protocol
- Read/write operations change state of cache line and trigger message passing

Design choices:

- Cache line size (64, 128, 256 ...)
- Number of states (MSI, MOESI, MESIF ...)

Cache coherency: takeaways

High-level ideas:

- Memory split into chunks (cache lines) with auxiliary data (cache line state)
- Copies of cache lines could reside in main memory and in processor-specific caches
- Processors communicate via memory bus and use cache coherency protocol
- Read/write operations change state of cache line and trigger message passing

Design choices:

- Cache line size (64, 128, 256 ...)
- Number of states (MSI, MOESI, MESIF ...)
- Hierarchy of caches (L1/L2/L3, iCache/dCache)

Cache coherency: takeaways

High-level ideas:

- Memory split into chunks (cache lines) with auxiliary data (cache line state)
- Copies of cache lines could reside in main memory and in processor-specific caches
- Processors communicate via memory bus and use cache coherency protocol
- Read/write operations change state of cache line and trigger message passing

Design choices:

- Cache line size (64, 128, 256 ...)
- Number of states (MSI, MOESI, MESIF ...)
- Hierarchy of caches (L1/L2/L3, iCache/dCache)
- Topology of interconnect: see slide 37

Cache coherency: takeaways

High-level ideas:

- Memory split into chunks (cache lines) with auxiliary data (cache line state)
- Copies of cache lines could reside in main memory and in processor-specific caches
- Processors communicate via memory bus and use cache coherency protocol
- Read/write operations change state of cache line and trigger message passing

Design choices:

- Cache line size (64, 128, 256 ...)
- Number of states (MSI, MOESI, MESIF ...)
- Hierarchy of caches (L1/L2/L3, iCache/dCache)
- Topology of interconnect: see slide 37
- When to send request? To whom? How to process incoming request?

Cache coherency: takeaways

High-level ideas:

- Memory split into chunks (cache lines) with auxiliary data (cache line state)
- Copies of cache lines could reside in main memory and in processor-specific caches
- Processors communicate via memory bus and use cache coherency protocol
- Read/write operations change state of cache line and trigger message passing

Design choices:

- Cache line size (64, 128, 256 ...)
- Number of states (MSI, MOESI, MESIF ...)
- Hierarchy of caches (L1/L2/L3, iCache/dCache)
- Topology of interconnect: see slide 37
- When to send request? To whom? How to process incoming request?

Challenges:

Cache coherency: takeaways

High-level ideas:

- Memory split into chunks (cache lines) with auxiliary data (cache line state)
- Copies of cache lines could reside in main memory and in processor-specific caches
- Processors communicate via memory bus and use cache coherency protocol
- Read/write operations change state of cache line and trigger message passing

Design choices:

- Cache line size (64, 128, 256 ...)
- Number of states (MSI, MOESI, MESIF ...)
- Hierarchy of caches (L1/L2/L3, iCache/dCache)
- Topology of interconnect: see slide 37
- When to send request? To whom? How to process incoming request?

Challenges:

- Invalidation storms

Cache coherency: takeaways

High-level ideas:

- Memory split into chunks (cache lines) with auxiliary data (cache line state)
- Copies of cache lines could reside in main memory and in processor-specific caches
- Processors communicate via memory bus and use cache coherency protocol
- Read/write operations change state of cache line and trigger message passing

Design choices:

- Cache line size (64, 128, 256 ...)
- Number of states (MSI, MOESI, MESIF ...)
- Hierarchy of caches (L1/L2/L3, iCache/dCache)
- Topology of interconnect: see slide 37
- When to send request? To whom? How to process incoming request?

Challenges:

- Invalidation storms
- Unnecessary stalls

Lecture plan

1. Preliminary discussion
2. Cache coherency
3. Hardware optimizations
   - Store buffering
   - Load buffering
   - Optional: Invalidate Queues
   - Interconnect topology
4. Hardware memory model
5. Memory barriers
6. Litmus tests
7. Summary

Concurrent invariants and where to violate them

- **Coherence**: in any execution, for each location, there is a single linear order of all writes to that location which must be respected by all threads
- Step 1: "break" intuitive behaviour to get performance improvement
- Step 2: repair consistency

Which parts of cache coherence should be optimized?

State machine:

- **Modified**, **Exclusive**, **Shared**, **Invalid**

Message passing on some transitions:

- asynchronous (fire and forget)
- synchronous (await confirmation)

Optimization opportunities:

- Option 1: more states (MESIF, MOESI ...)
- Option 2: more asynchronous operations

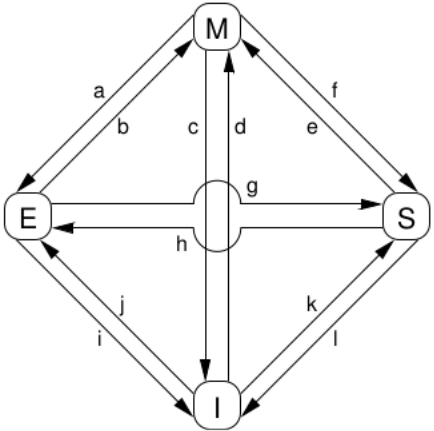

Which parts of cache coherence should be optimized?

State machine:

- **Modified**, **Exclusive**, **Shared**, **Invalid**

Message passing on some transitions:

- asynchronous (fire and forget)
- synchronous (await confirmation)

Optimization opportunities:

- Option 1: more states (MESIF, MOESI ...)
- **Option 2: more asynchronous operations**

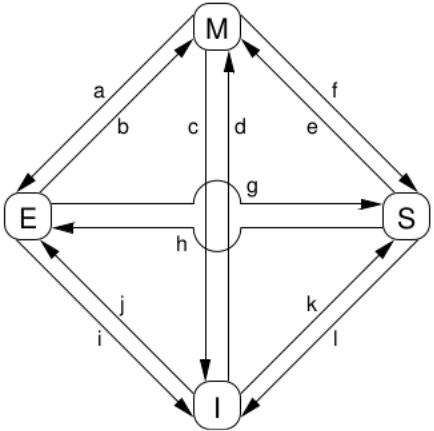

Removing unnecessary stalls

CPU execution:

- `write(x = 1)`

Removing unnecessary stalls

CPU execution:

- `write(x = 1) , cache_line(x) is Shared`

Removing unnecessary stalls

CPU execution:

- `write(x = 1)` , `cache_line(x)` is `Shared`
- Send invalidation requests

Removing unnecessary stalls

CPU execution:

- `write(x = 1)` , `cache_line(x)` is `Shared`
- Send invalidation requests , Await confirmation

Removing unnecessary stalls

CPU execution:

- `write(x = 1)` , `cache_line(x)` is Shared
- Send invalidation requests , Await confirmation
- Modify `cache_line(x)`

Removing unnecessary stalls

CPU execution:

- `write(x = 1)` , `cache_line(x)` is `Shared`
- Send invalidation requests , Await confirmation
- Modify `cache_line(x)`
- `write(y = 1)`

Removing unnecessary stalls

CPU execution:

- `write(x = 1)` , `cache_line(x)` is Shared
- Send invalidation requests , Await confirmation
- Modify `cache_line(x)`
- `write(y = 1)` , `cache_line(y)` is Shared

Removing unnecessary stalls

CPU execution:

- `write(x = 1)` , `cache_line(x)` is Shared
- Send invalidation requests , Await confirmation
- Modify `cache_line(x)`
- `write(y = 1)` , `cache_line(y)` is Shared
- Send invalidation requests

Removing unnecessary stalls

CPU execution:

- `write(x = 1)` , `cache_line(x)` is Shared
- Send invalidation requests , Await confirmation
- Modify `cache_line(x)`
- `write(y = 1)` , `cache_line(y)` is Shared
- Send invalidation requests , Await confirmation

Removing unnecessary stalls

CPU execution:

- `write(x = 1)` , `cache_line(x)` is Shared
- Send invalidation requests , Await confirmation
- Modify `cache_line(x)`
- `write(y = 1)` , `cache_line(y)` is Shared
- Send invalidation requests , Await confirmation
- Modify `cache_line(y)`

Removing unnecessary stalls

CPU execution:

- `write(x = 1)` , `cache_line(x)` is Shared
- Send invalidation requests , Await confirmation
- Modify `cache_line(x)`
- `write(y = 1)` , `cache_line(y)` is Shared
- Send invalidation requests , Await confirmation
- Modify `cache_line(y)`

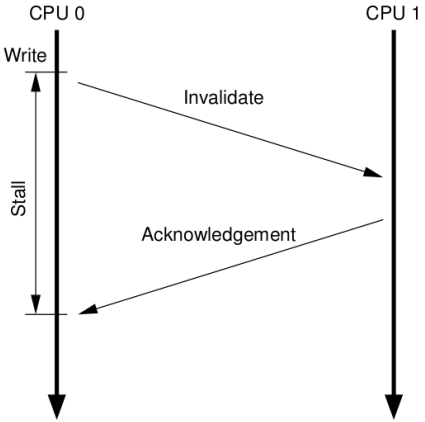

Removing unnecessary stalls

CPU execution:

- `write(x = 1)` , `cache_line(x)` is Shared
- Send invalidation requests , Await confirmation
- Modify `cache_line(x)`
- `write(y = 1)` , `cache_line(y)` is Shared
- Send invalidation requests , Await confirmation
- Modify `cache_line(y)`

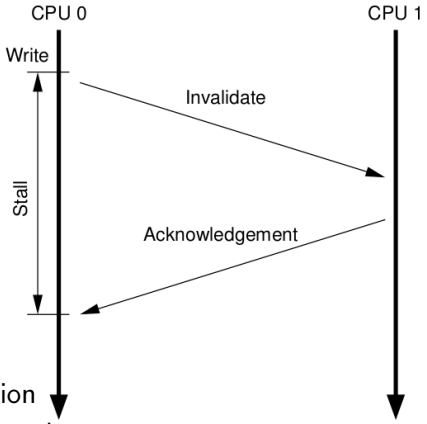

Idea: batch processing

- Buffer of "pending operations" that await confirmation
- Execute other instructions **before** invalidation confirmed
- Modification of the same location "consults" with buffer, not with cache (**store to load forwarding**)

Lecture plan

1. Preliminary discussion
2. Cache coherency
3. Hardware optimizations
   - Store buffering
   - Load buffering
   - Optional: Invalidate Queues
   - Interconnect topology
4. Hardware memory model
5. Memory barriers
6. Litmus tests
7. Summary

Store buffering

```
int x, y;
```

```
void threadA() {
        x = 1;
    int a = y;
}
```

```
void threadB() {
        y = 1;
    int b = x;
}
```

Store buffering

```
int x, y;
```

```
void threadA() {
      x = 1;
  int a = y;
}
```

```
void threadB() {
        y = 1;
    int b = x;
}
```

```
# thread A
mov [x] , 1  # (A.1)
mov EAX , [y] # (A.2)
```

```
# thread B
mov [y] , 1  # (B.1)
mov EBX, [x] # (B.2)
```

Store buffering

```
# thread A
mov [x] , 1  # (A.1)
mov EAX , [y] # (A.2)
```

```
# thread B
mov [y] , 1  # (B.1)
mov EBX, [x] # (B.2)
```

Store buffering

```
# thread A
mov [x] , 1  # (A.1)
mov EAX , [y] # (A.2)
```

```
# thread B
mov [y] , 1  # (B.1)
mov EBX, [x] # (B.2)
```

What could we see in (EAX EBX)?

(1 1) , (0 1) , (1 0) , (0 0)

Store buffering

```
# thread A
mov [x] , 1  # (A.1)
mov EAX , [y] # (A.2)
```

```
# thread B
mov [y] , 1  # (B.1)
mov EBX, [x] # (B.2)
```

What could we see in (EAX EBX)?

(1 1) , (0 1) , (1 0) , (0 0)

Possible executions:

- A.1 -> A.2 -> B.1 -> B.2
- B.1 -> A.2 -> B.2
- B.2 -> A.2
- B.1 -> A.1 -> A.2 -> B.2
- B.2 -> A.2
- B.2 -> A.1 -> A.2

Store buffering

```
# thread A
mov [x] , 1  # (A.1)
mov EAX , [y] # (A.2)
```

```
# thread B
mov [y] , 1  # (B.1)
mov EBX, [x] # (B.2)
```

What could we see in (EAX EBX)?

(1 1) , (0 1) , (1 0) , (0 0)

Possible executions:

- A.1 -> A.2 -> B.1 -> B.2 : (0, 1)
- B.1 -> A.2 -> B.2 : (1, 1)
- B.2 -> A.2 : (1, 1)
- B.1 -> A.1 -> A.2 -> B.2 : (1, 1)
- B.2 -> A.2 : (1, 1)
- B.2 -> A.1 -> A.2 : (1, 0)

Store buffering

```
# thread A
mov [x] , 1  # (A.1)
mov EAX , [y] # (A.2)
```

```
# thread B
mov [y] , 1  # (B.1)
mov EBX, [x] # (B.2)
```

What could we see in (EAX EBX)?

Linearizable answer: (1 1) , (0 1) , (1 0)

Possible executions:

- A.1 -> A.2 -> B.1 -> B.2 : (0, 1)
- B.1 -> A.2 -> B.2 : (1, 1)
- B.2 -> A.2 : (1, 1)
- B.1 -> A.1 -> A.2 -> B.2 : (1, 1)
- B.2 -> A.2 : (1, 1)
- B.2 -> A.1 -> A.2 : (1, 0)

Store buffering

```
# thread A
mov [x] , 1  # (A.1)
mov EAX , [y] # (A.2)
```

```
# thread B
mov [y] , 1  # (B.1)
mov EBX, [x] # (B.2)
```

What could we see in (EAX EBX)?

Hardware answer: (1 1) , (0 1) , (1 0) , (0 0)

Possible executions:

- A.1 -> A.2 -> B.1 -> B.2 : (0, 1)
- B.1 -> A.2 -> B.2 : (1, 1)
- B.2 -> A.2 : (1, 1)
- B.1 -> A.1 -> A.2 -> B.2 : (1, 1)
- B.2 -> A.2 : (1, 1)
- B.2 -> A.1 -> A.2 : (1, 0)

Store buffering

```
# thread A
mov [x] , 1  # (A.1)
mov EAX , [y] # (A.2)
```

```
# thread B
mov [y] , 1  # (B.1)
mov EBX, [x] # (B.2)
```

What could we see in (EAX EBX)?

Hardware answer: (1 1) , (0 1) , (1 0) , (0 0) **WHAT?**

Possible executions:

- A.1 -> A.2 -> B.1 -> B.2 : (0, 1)
- B.1 -> A.2 -> B.2 : (1, 1)
- B.2 -> A.2 : (1, 1)
- B.1 -> A.1 -> A.2 -> B.2 : (1, 1)
- B.2 -> A.2 : (1, 1)
- B.2 -> A.1 -> A.2 : (1, 0)

Store buffering

```
# thread A                    # thread B
mov [x] , 1   # (A.1)         mov [y] , 1   # (B.1)
mov EAX , [y] # (A.2)         mov EBX, [x]  # (B.2)
```

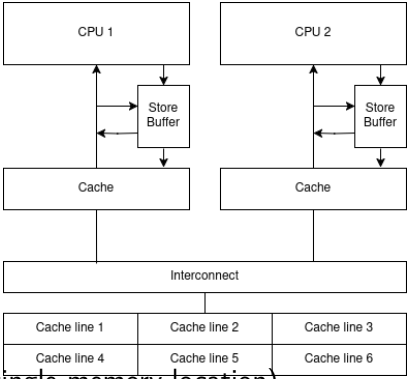

Hardware allows: (EAX=0 EBX=0)

- Looks like CPU reorders memory load and stores
- but does not break per-processor order
- and keeps cache coherency (linear order of writes for single memory location)

Store buffering

```
# thread A                    # thread B
mov [x] , 1   # (A.1)         mov [y] , 1   # (B.1)
mov EAX , [y] # (A.2)         mov EBX, [x]  # (B.2)
```

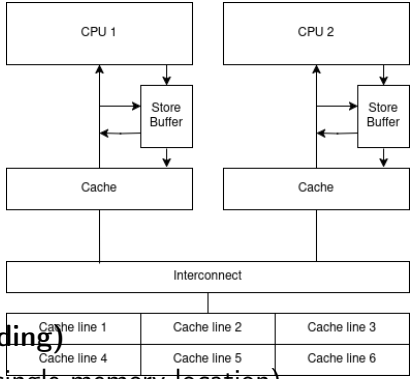

Hardware allows: (EAX=0 EBX=0)

- Looks like CPU reorders memory load and stores
- but does not break per-processor order **(store forwarding)**
- and keeps cache coherency (linear order of writes for single memory location)

Store to load forwarding: why?

```
static int a = 0, int b = 0;
a = 1;
b = a + 1;
assert(b == 2);
```

Store to load forwarding: why?

```
static int a = 0, int b = 0;
a = 1;
b = a + 1;
assert(b == 2);
```

- CPU 0: start execute `a = 1`, a not in cache

Store to load forwarding: why?

```
static int a = 0, int b = 0;
a = 1;
b = a + 1;
assert(b == 2);
```

- CPU 0: start execute a = 1, a not in cache
- CPU 0: send "read invalidate"

Store to load forwarding: why?

```
static int a = 0, int b = 0;
a = 1;
b = a + 1;
assert(b == 2);
```

- CPU 0: start execute `a = 1`, a not in cache
- CPU 0: send "read invalidate"
- CPU 0: put "`write(a = 1)`" to store buffer

Store to load forwarding: why?

```
static int a = 0, int b = 0;
a = 1;
b = a + 1;
assert(b == 2);
```

- CPU 0: start execute `a = 1`, a not in cache
- CPU 0: send "read invalidate"
- CPU 0: put "`write(a = 1)`" to store buffer
- CPU 1: receive "read invalidate", respond

Store to load forwarding: why?

```
static int a = 0, int b = 0;
a = 1;
b = a + 1;
assert(b == 2);
```

- CPU 0: start execute `a = 1`, a not in cache
- CPU 0: send "read invalidate"
- CPU 0: put "`write(a = 1)`" to store buffer
- CPU 1: receive "read invalidate", respond
- CPU 0: start execute `b = a + 1`

Store to load forwarding: why?

```
static int a = 0, int b = 0;
a = 1;
b = a + 1;
assert(b == 2);
```

- CPU 0: start execute `a = 1`, a not in cache
- CPU 0: send "read invalidate"
- CPU 0: put "`write(a = 1)`" to store buffer
- CPU 1: receive "read invalidate", respond
- CPU 0: start execute `b = a + 1`
- CPU 0: receive cache line from CPU 1 ("a is zero"), put it to cache

Store to load forwarding: why?

```
static int a = 0, int b = 0;
a = 1;
b = a + 1;
assert(b == 2);
```

- CPU 0: start execute `a = 1`, a not in cache
- CPU 0: send "read invalidate"
- CPU 0: put "`write(a = 1)`" to store buffer
- CPU 1: receive "read invalidate", respond
- CPU 0: start execute `b = a + 1`
- CPU 0: receive cache line from CPU 1 ("a is zero"), put it to cache
- CPU 0: use a value from cache (`a = 0`)

Store to load forwarding: why?

```
static int a = 0, int b = 0;
a = 1;
b = a + 1;
assert(b == 2);
```

- CPU 0: start execute `a = 1`, a not in cache
- CPU 0: send "read invalidate"
- CPU 0: put "`write(a = 1)`" to store buffer
- CPU 1: receive "read invalidate", respond
- CPU 0: start execute `b = a + 1`
- CPU 0: receive cache line from CPU 1 ("a is zero"), put it to cache
- CPU 0: use a value from cache (`a = 0`)
- CPU 0: commit "`write(a = 1)`" from store buffer (now cache thinks "a is one")

Store to load forwarding: why?

```
static int a = 0, int b = 0;
a = 1;
b = a + 1;
assert(b == 2);
```

- CPU 0: start execute `a = 1`, a not in cache
- CPU 0: send "read invalidate"
- CPU 0: put "`write(a = 1)`" to store buffer
- CPU 1: receive "read invalidate", respond
- CPU 0: start execute `b = a + 1`
- CPU 0: receive cache line from CPU 1 ("a is zero"), put it to cache
- CPU 0: use a value from cache (`a = 0`)
- CPU 0: commit "`write(a = 1)`" from store buffer (now cache thinks "a is one")
- CPU 0: finish writing to `b` ("'b is one")

Store to load forwarding: why?

```
static int a = 0, int b = 0;
a = 1;
b = a + 1;
assert(b == 2);
```

- CPU 0: start execute `a = 1`, a not in cache
- CPU 0: send "read invalidate"
- CPU 0: put "`write(a = 1)`" to store buffer
- CPU 1: receive "read invalidate", respond
- CPU 0: start execute `b = a + 1`
- CPU 0: receive cache line from CPU 1 ("a is zero"), put it to cache
- CPU 0: use a value from cache (`a = 0`)
- CPU 0: commit "`write(a = 1)`" from store buffer (now cache thinks "a is one")
- CPU 0: finish writing to `b` ("'b is one")
- CPU 0: assert failed

Store to load forwarding: why?

```
static int a = 0, int b = 0;
a = 1;
b = a + 1;
assert(b == 2);
```

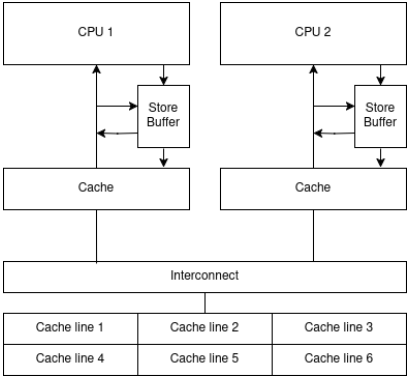

- CPU 0: start execute `a = 1`, a not in cache
- CPU 0: send "read invalidate"
- CPU 0: put "`write(a = 1)`" to store buffer
- CPU 1: receive "read invalidate", respond
- CPU 0: start execute `b = a + 1`
- CPU 0: receive cache line from CPU 1 ("a is zero"), put
- CPU 0: use a value from cache (`a = 0`)
- CPU 0: commit "`write(a = 1)`" from store buffer (now cache thinks "a is one")
- CPU 0: finish writing to b ("'b is one")
- CPU 0: assert failed

Store buffering: useful?

- Processor extended with internal buffer to speed-up execution
- In-processor order conforms to program order (**store forwarding**)
  - Perfect single-CPU abstraction
- Other processor may see memory updates to happen in non-program order
  - Abstraction leaks[8] in multicore environment

[8] https://www.joelonsoftware.com/2002/11/11/the-law-of-leaky-abstractions/

Store buffering: useful?

- Processor extended with internal buffer to speed-up execution
- In-processor order conforms to program order (**store forwarding**)
  - Perfect single-CPU abstraction
- Other processor may see memory updates to happen in non-program order
  - Abstraction leaks[8] in multicore environment

Some concurrent algorithms do not tolerate arbitrary memory reorderings (e.g. Peterson Lock).

[8] https://www.joelonsoftware.com/2002/11/11/the-law-of-leaky-abstractions/

Store buffering: useful?

- Processor extended with internal buffer to speed-up execution
- In-processor order conforms to program order (**store forwarding**)
  - Perfect single-CPU abstraction
- Other processor may see memory updates to happen in non-program order
  - Abstraction leaks[8] in multicore environment

Some concurrent algorithms do not tolerate arbitrary memory reorderings (e.g. Peterson Lock). How to repair them?

[8] https://www.joelonsoftware.com/2002/11/11/the-law-of-leaky-abstractions/

Store buffering: useful?

- Processor extended with internal buffer to speed-up execution
- In-processor order conforms to program order (**store forwarding**)
  - Perfect single-CPU abstraction
- Other processor may see memory updates to happen in non-program order
  - Abstraction leaks[8] in multicore environment

Some concurrent algorithms do not tolerate arbitrary memory reorderings (e.g. Peterson Lock).
How to repair them?
Use special CPU instruction:

[8] https://www.joelonsoftware.com/2002/11/11/the-law-of-leaky-abstractions/

Store buffering: useful?

- Processor extended with internal buffer to speed-up execution
- In-processor order conforms to program order (**store forwarding**)
  - Perfect single-CPU abstraction
- Other processor may see memory updates to happen in non-program order
  - Abstraction leaks[8] in multicore environment

Some concurrent algorithms do not tolerate arbitrary memory reorderings (e.g. Peterson Lock).
How to repair them?
Use special CPU instruction:

- "flush store buffer before next operation"

[8] https://www.joelonsoftware.com/2002/11/11/the-law-of-leaky-abstractions/

Store buffering: useful?

- Processor extended with internal buffer to speed-up execution
- In-processor order conforms to program order (**store forwarding**)
  - Perfect single-CPU abstraction
- Other processor may see memory updates to happen in non-program order
  - Abstraction leaks[8] in multicore environment

Some concurrent algorithms do not tolerate arbitrary memory reorderings (e.g. Peterson Lock).
How to repair them?
Use special CPU instruction:

- "flush store buffer before next operation"
- "ensure no reordering of **this** and **that**"

[8] https://www.joelonsoftware.com/2002/11/11/the-law-of-leaky-abstractions/

Store buffering: useful?

- Processor extended with internal buffer to speed-up execution
- In-processor order conforms to program order (**store forwarding**)
  - Perfect single-CPU abstraction
- Other processor may see memory updates to happen in non-program order
  - Abstraction leaks[8] in multicore environment

Some concurrent algorithms do not tolerate arbitrary memory reorderings (e.g. Peterson Lock).
How to repair them?
Use special CPU instruction:

- "flush store buffer before next operation"
- "ensure no reordering of **this** and **that**"
- "execute memory barrier instruction"

[8] https://www.joelonsoftware.com/2002/11/11/the-law-of-leaky-abstractions/

Store buffering: useful?

- Processor extended with internal buffer to speed-up execution
- In-processor order conforms to program order (**store forwarding**)
  - Perfect single-CPU abstraction
- Other processor may see memory updates to happen in non-program order
  - Abstraction leaks[8] in multicore environment

Some concurrent algorithms do not tolerate arbitrary memory reorderings (e.g. Peterson Lock).
How to repair them?
Use special CPU instruction:

- "flush store buffer before next operation"
- "ensure no reordering of **this** and **that**"
- "execute memory barrier instruction"

We will discuss few more hardware optimizations before diving into memory barriers.

[8] https://www.joelonsoftware.com/2002/11/11/the-law-of-leaky-abstractions/

Lecture plan

1. Preliminary discussion
2. Cache coherency
3. Hardware optimizations
   - Store buffering
   - Load buffering
   - Optional: Invalidate Queues
   - Interconnect topology
4. Hardware memory model
5. Memory barriers
6. Litmus tests
7. Summary

Load buffering

```
# thread A                    # thread B
mov EAX , [y] # (A.1)         mov EBX, [x] # (B.1)
mov [x] ,  1  # (A.2)         mov [y] , 1  # (B.2)
```

Possible result: (EAX=1, EBX=1)

Load buffering

```
# thread A                    # thread B
mov EAX , [y] # (A.1)         mov EBX, [x] # (B.1)
mov [x] ,  1  # (A.2)         mov [y] , 1  # (B.2)
```

Possible result: (EAX=1, EBX=1)

Some algorithms will fail (e.g. Peterson Lock).

Load buffering

```
# thread A                    # thread B
mov EAX , [y] # (A.1)         mov EBX, [x] # (B.1)
mov [x] ,  1  # (A.2)         mov [y] , 1  # (B.2)
```

`Possible result: (EAX=1, EBX=1)`

Some algorithms will fail (e.g. Peterson Lock).

How to repair them?

Load buffering

```
# thread A                    # thread B
mov EAX , [y] # (A.1)         mov EBX, [x] # (B.1)
mov [x] ,  1  # (A.2)         mov [y] , 1  # (B.2)
```

`Possible result: (EAX=1, EBX=1)`

Some algorithms will fail (e.g. Peterson Lock).

How to repair them?

Use special CPU instruction:

Load buffering

```
# thread A                    # thread B
mov EAX , [y] # (A.1)         mov EBX, [x] # (B.1)
mov [x] ,  1  # (A.2)         mov [y] , 1  # (B.2)
```

Possible result: (EAX=1, EBX=1)

Some algorithms will fail (e.g. Peterson Lock).

How to repair them?

Use special CPU instruction:

- "flush load buffer before next operation"

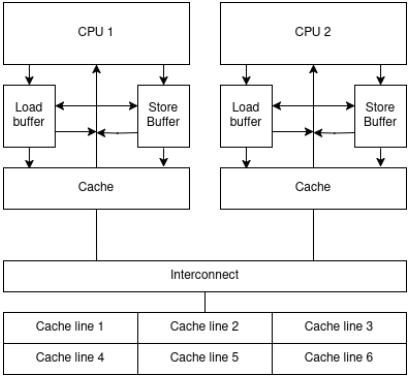

Load buffering

```
# thread A                    # thread B
mov EAX , [y] # (A.1)         mov EBX, [x] # (B.1)
mov [x] ,  1  # (A.2)         mov [y] , 1  # (B.2)
```

Possible result: (EAX=1, EBX=1)

Some algorithms will fail (e.g. Peterson Lock).

How to repair them?

Use special CPU instruction:

- "flush load buffer before next operation"
- "ensure no reordering of **this** and **that**"

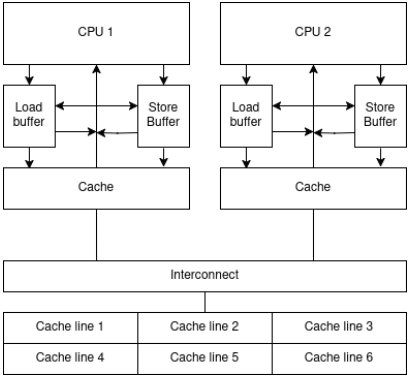

Load buffering

```
# thread A                    # thread B
mov EAX , [y] # (A.1)         mov EBX, [x] # (B.1)
mov [x] ,  1  # (A.2)         mov [y] , 1  # (B.2)
```

Possible result: (EAX=1, EBX=1)

Some algorithms will fail (e.g. Peterson Lock).

How to repair them?

Use special CPU instruction:

- "flush load buffer before next operation"
- "ensure no reordering of **this** and **that**"
  - should we flush load buffer and store buffer simultaneously?

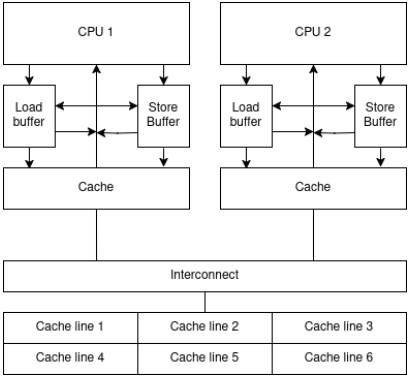

Load buffering

```
# thread A                    # thread B
mov EAX , [y] # (A.1)         mov EBX, [x] # (B.1)
mov [x] ,  1  # (A.2)         mov [y] , 1  # (B.2)
```

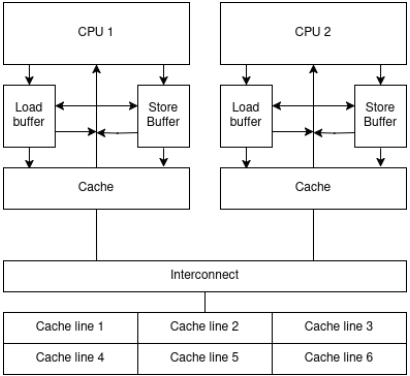

Possible result: (EAX=1, EBX=1)

Some algorithms will fail (e.g. Peterson Lock).

How to repair them?

Use special CPU instruction:

- "flush load buffer before next operation"
- "ensure no reordering of **this** and **that**"
  - should we flush load buffer and store buffer simultaneously?
- "execute memory barrier instruction"

Load buffering

```
# thread A                    # thread B
mov EAX , [y] # (A.1)         mov EBX, [x] # (B.1)
mov [x] ,  1  # (A.2)         mov [y] , 1  # (B.2)
```

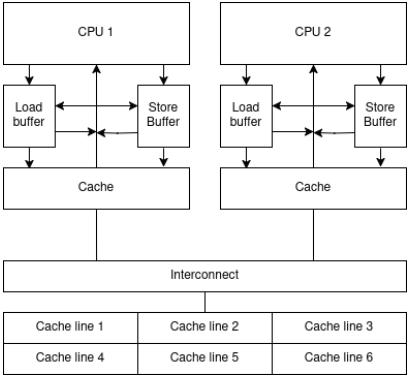

`Possible result: (EAX=1, EBX=1)`

Some algorithms will fail (e.g. Peterson Lock).

How to repair them?

Use special CPU instruction:

- "flush load buffer before next operation"
- "ensure no reordering of **this** and **that**"
  - should we flush load buffer and store buffer simultaneously?
- "execute memory barrier instruction"

Looks like we need different **kinds** of memory barriers.

Lecture plan

1. Preliminary discussion
2. Cache coherency
3. Hardware optimizations
   - Store buffering
   - Load buffering
   - Optional: Invalidate Queues
   - Interconnect topology
4. Hardware memory model
5. Memory barriers
6. Litmus tests
7. Summary

Invalidate Queue

```
void foo(void) {
  a = 1;
  smp_mb(); // memory barrier
  b = 1;
}
void bar(void) {
  while (b == 0) continue;
  assert(a == 1); // fails with `a == 0`. WHAT?
}
```

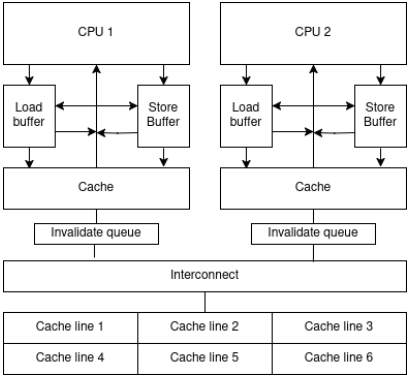

Invalidate Queue

```
void foo(void) {
  a = 1;
  smp_mb(); // memory barrier
  b = 1;
}
void bar(void) {
  while (b == 0) continue;
  assert(a == 1); // fails with `a == 0`. WHAT?
}
```

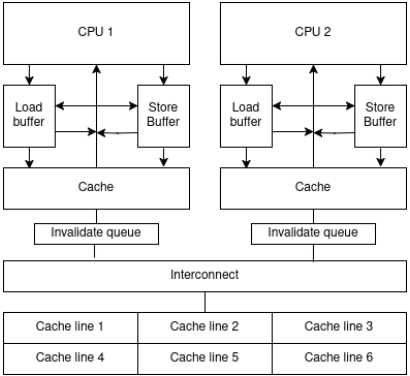

Key insight:

- Synchronization is **always** a **communication**
  - The one to initiate data exchange (writer, request sender)
  - The one to ensure data view is consistent (reader, response sender)
- "My thread executed strongest memory barrier, others will see updated data" is **NOT OK**

Invalidate Queue

```
void foo(void) {
  a = 1;
  smp_mb(); // memory barrier
  b = 1;
}
void bar(void) {
  while (b == 0) continue;
  smp_mb(); // memory barrier
  assert(a == 1); // never fails
}
```

Optional homework: perfbook.B.4.3

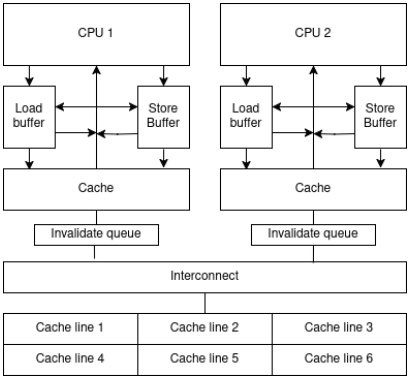

Lecture plan

1. Preliminary discussion
2. Cache coherency
3. Hardware optimizations
   - Store buffering
   - Load buffering
   - Optional: Invalidate Queues
   - Interconnect topology
4. Hardware memory model
5. Memory barriers
6. Litmus tests
7. Summary

Independent Reads of Independent Writes

```
thread1      thread2      thread3      thread4
  x = 1        y = 1        r1 = x       r3 = y
                            r2 = y       r4 = x
```

Assume there is no in-CPU reordering of memory operations (no load buffering)

Independent Reads of Independent Writes

```
thread1      thread2      thread3      thread4
  x = 1        y = 1        r1 = x       r3 = y
                            r2 = y       r4 = x
```

Assume there is no in-CPU reordering of memory operations (no load buffering)
Is it possible to observe `(r1 = 1, r2 = 0, r3 = 1, r4 = 0)`?

Independent Reads of Independent Writes

```
thread1      thread2      thread3      thread4
  x = 1        y = 1        r1 = x       r3 = y
                            r2 = y       r4 = x
```

Assume there is no in-CPU reordering of memory operations (no load buffering)
Is it possible to observe `(r1 = 1, r2 = 0, r3 = 1, r4 = 0)`?

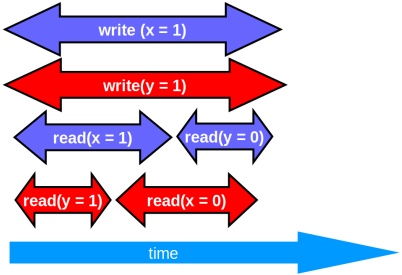

Independent Reads of Independent Writes

```
thread1      thread2      thread3      thread4
  x = 1        y = 1        r1 = x       r3 = y
                            r2 = y       r4 = x
```

Assume there is no in-CPU reordering of memory operations (no load buffering)
Is it possible to observe `(r1 = 1, r2 = 0, r3 = 1, r4 = 0)`?
Hint: it is NOT linearizable

Independent Reads of Independent Writes

```
thread1      thread2      thread3      thread4
  x = 1        y = 1        r1 = x       r3 = y
                            r2 = y       r4 = x
```

Assume there is no in-CPU reordering of memory operations (no load buffering)
Is it possible to observe `(r1 = 1, r2 = 0, r3 = 1, r4 = 0)`?
Hint: it is NOT linearizable

- x86 or x86_64 (TSO): no

Independent Reads of Independent Writes

```
thread1      thread2      thread3      thread4
  x = 1        y = 1        r1 = x       r3 = y
                            r2 = y       r4 = x
```

Assume there is no in-CPU reordering of memory operations (no load buffering)
Is it possible to observe `(r1 = 1, r2 = 0, r3 = 1, r4 = 0)`?
Hint: it is NOT linearizable

- `x86` or `x86_64` (TSO): no
- `ARM` or `POWER`: yes[9]

[9] A Tutorial Introduction to the ARM and POWER Relaxed Memory Models, section 6.1

Independent Reads of Independent Writes

```
thread1      thread2      thread3      thread4
  x = 1        y = 1        r1 = x       r3 = y
                            r2 = y       r4 = x
```

Assume there is no in-CPU reordering of memory operations (no load buffering)
Is it possible to observe `(r1 = 1, r2 = 0, r3 = 1, r4 = 0)`?
Hint: it is NOT linearizable

- `x86` or `x86_64` (TSO): no
- `ARM` or `POWER`: yes[9]

Information about cache lines could "travel" from one CPU to other CPU with different speed.

[9] A Tutorial Introduction to the ARM and POWER Relaxed Memory Models, section 6.1

Interconnect topology

Key insight:

- Cache lines could "travel" from one CPU to other CPU with different speed

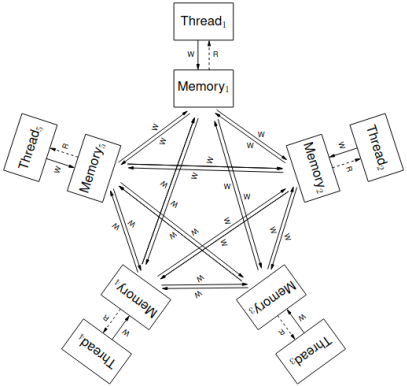

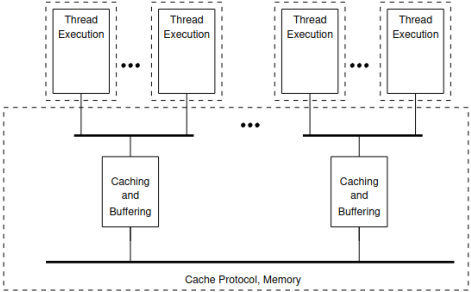

Lecture plan

1. Preliminary discussion
2. Cache coherency
3. Hardware optimizations
   - Store buffering
   - Load buffering
   - Optional: Invalidate Queues
   - Interconnect topology
4. Hardware memory model
5. Memory barriers
6. Litmus tests
7. Summary

Hardware-level reordering

In one sentence

Hardware-level reordering

In one sentence

- Anything could be reordered with everything

Hardware-level reordering

Conservative approximation

- Anything could be reordered with everything

Hardware-level reordering

Conservative approximation

- Anything could be reordered with everything (point-of-view of some CPUs may disagree)

Hardware-level reordering

Conservative approximation

- Anything could be reordered with everything (point-of-view of some CPUs may disagree)
- Current CPU will "emulate" execution of single-threaded program "as if" in program order

Hardware-level reordering

Conservative approximation

- Anything could be reordered with everything (point-of-view of some CPUs may disagree)
- Current CPU will "emulate" execution of single-threaded program "as if" in program order
- Single memory cell is **coherent**

Hardware-level reordering

Conservative approximation

- Anything could be reordered with everything (point-of-view of some CPUs may disagree)
- Current CPU will "emulate" execution of single-threaded program "as if" in program order
- Single memory cell is **coherent**
  - linear order of writes for **particular** location

Hardware-level reordering

Conservative approximation

- Anything could be reordered with everything (point-of-view of some CPUs may disagree)
- Current CPU will "emulate" execution of single-threaded program "as if" in program order
- Single memory cell is **coherent**
  - linear order of writes for **particular** location
  - no ordering guarantees across **different** locations

Hardware-level reordering

Conservative approximation

- Anything could be reordered with everything (point-of-view of some CPUs may disagree)
- Current CPU will "emulate" execution of single-threaded program "as if" in program order
- Single memory cell is **coherent**
  - linear order of writes for **particular** location
  - no ordering guarantees across **different** locations

How to treat non-synchronized memory accesses:

Hardware-level reordering

Conservative approximation

- Anything could be reordered with everything (point-of-view of some CPUs may disagree)
- Current CPU will "emulate" execution of single-threaded program "as if" in program order
- Single memory cell is **coherent**
  - linear order of writes for **particular** location
  - no ordering guarantees across **different** locations

How to treat non-synchronized memory accesses:

- Happened on some processor – no guarantees it is visible on another processor

Hardware-level reordering

Conservative approximation

- Anything could be reordered with everything (point-of-view of some CPUs may disagree)
- Current CPU will "emulate" execution of single-threaded program "as if" in program order
- Single memory cell is **coherent**
  - linear order of writes for **particular** location
  - no ordering guarantees across **different** locations

How to treat non-synchronized memory accesses:

- Happened on some processor – no guarantees it is visible on another processor
- Synchronization is always a communication

Hardware-level reordering

Conservative approximation

- Anything could be reordered with everything (point-of-view of some CPUs may disagree)
- Current CPU will "emulate" execution of single-threaded program "as if" in program order
- Single memory cell is **coherent**
  - linear order of writes for **particular** location
  - no ordering guarantees across **different** locations

How to treat non-synchronized memory accesses:

- Happened on some processor – no guarantees it is visible on another processor
- Synchronization is always a communication
  - somebody writes and ensures data will be properly shared (memory barrier)

Hardware-level reordering

Conservative approximation

- Anything could be reordered with everything (point-of-view of some CPUs may disagree)
- Current CPU will "emulate" execution of single-threaded program "as if" in program order
- Single memory cell is **coherent**
  - linear order of writes for **particular** location
  - no ordering guarantees across **different** locations

How to treat non-synchronized memory accesses:

- Happened on some processor – no guarantees it is visible on another processor
- Synchronization is always a communication
  - somebody writes and ensures data will be properly shared (memory barrier)
  - somebody reads and ensures data view is consistent (memory barrier)

Hardware-level reordering

Conservative approximation

- Anything could be reordered with everything (point-of-view of some CPUs may disagree)
- Current CPU will "emulate" execution of single-threaded program "as if" in program order
- Single memory cell is **coherent**
  - linear order of writes for **particular** location
  - no ordering guarantees across **different** locations

How to treat non-synchronized memory accesses:

- Happened on some processor – no guarantees it is visible on another processor
- Synchronization is always a communication
  - somebody writes and ensures data will be properly shared (memory barrier)
  - somebody reads and ensures data view is consistent (memory barrier)
- "Today it works on my processor" is **NOT OK**

Weak memory model

We started with simplistic model of multiprocessor memory hierarchy

Weak memory model

We started with simplistic model of multiprocessor memory hierarchy

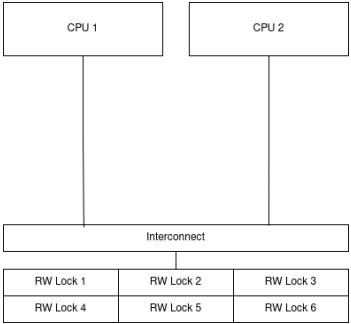

Weak memory model

We started with simplistic model of multiprocessor memory hierarchy

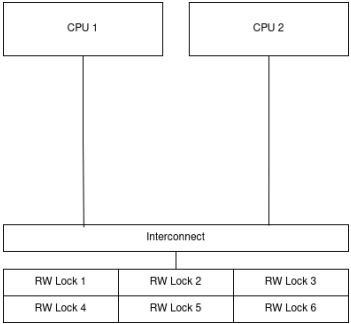

- All memory operations are guarded with read-write mutex (thus ordered)
- Read-mostly workloads scale quite well
- Performance is low due to contention and slow queries of data

Weak memory model

We started with simplistic model of multiprocessor memory hierarchy

- All memory operations are guarded with read-write mutex (thus ordered)
- Read-mostly workloads scale quite well
- Performance is low due to contention and slow queries of data

Weak memory model

We started with simplistic model of multiprocessor memory hierarchy

- All memory operations are guarded with read-write mutex (thus ordered)
- Read-mostly workloads scale quite well
- Performance is low due to contention and slow queries of data

We started to optimize our model and lost "useful" consistency guarantees

Weak memory model

We started with simplistic model of multiprocessor memory hierarchy

- All memory operations are guarded with read-write mutex (thus ordered)
- Read-mostly workloads scale quite well
- Performance is low due to contention and slow queries of data

We started to optimize our model and lost "useful" consistency guarantees

- Replication pattern (multiple copies of same data in different caches)

Weak memory model

We started with simplistic model of multiprocessor memory hierarchy

- All memory operations are guarded with read-write mutex (thus ordered)
- Read-mostly workloads scale quite well
- Performance is low due to contention and slow queries of data

We started to optimize our model and lost "useful" consistency guarantees

- Replication pattern (multiple copies of same data in different caches)
- Reordering of independent operations (store buffering, load buffering)

Weak memory model

We started with simplistic model of multiprocessor memory hierarchy

- All memory operations are guarded with read-write mutex (thus ordered)
- Read-mostly workloads scale quite well
- Performance is low due to contention and slow queries of data

We started to optimize our model and lost "useful" consistency guarantees

- Replication pattern (multiple copies of same data in different caches)
- Reordering of independent operations (store buffering, load buffering)
- Making message-passing asynchronous (invalidate queues)

Weak memory model

We started with simplistic model of multiprocessor memory hierarchy

- All memory operations are guarded with read-write mutex (thus ordered)
- Read-mostly workloads scale quite well
- Performance is low due to contention and slow queries of data

We started to optimize our model and lost "useful" consistency guarantees

- Replication pattern (multiple copies of same data in different caches)
- Reordering of independent operations (store buffering, load buffering)
- Making message-passing asynchronous (invalidate queues)
- Non-uniform interconnect (faster/slower message passing)

Weak memory model

We started to optimize our model and lost "useful" consistency guarantees

- Replication pattern (multiple copies of same data in different caches)
- Reordering of independent operations (store buffering, load buffering)
- Making message-passing asynchronous (invalidate queues)
- Non-uniform interconnect (faster/slower message passing)

Weak memory model

We started to optimize our model and lost "useful" consistency guarantees

- Replication pattern (multiple copies of same data in different caches)
- Reordering of independent operations (store buffering, load buffering)
- Making message-passing asynchronous (invalidate queues)
- Non-uniform interconnect (faster/slower message passing)

We have less strict rules on what is guaranteed for memory operations

- **Relaxed** memory model
- **Weak** memory model

Weak memory model

We started to optimize our model and lost "useful" consistency guarantees

- Replication pattern (multiple copies of same data in different caches)
- Reordering of independent operations (store buffering, load buffering)
- Making message-passing asynchronous (invalidate queues)
- Non-uniform interconnect (faster/slower message passing)

We have less strict rules on what is guaranteed for memory operations

- **Relaxed** memory model
- **Weak** memory model
- Interesting fact №1: stronger CPU memory model – less bugs you encounter during maintenance of large concurrent software system
- Interesting fact №2: smartphones, laptops, energy-efficient servers tend to use weak hardware

Lecture plan

1. Preliminary discussion
2. Cache coherency
3. Hardware optimizations
   - Store buffering
   - Load buffering
   - Optional: Invalidate Queues
   - Interconnect topology
4. Hardware memory model
5. Memory barriers
6. Litmus tests
7. Summary

Memory barriers: definition

Memory barrier

- Hardware-specific machine instruction that helps to enforce some kind of ordering between memory operations

Memory barriers: definition

Memory barrier

- Hardware-specific machine instruction that helps to enforce some kind of ordering between memory operations
- Affects **current** processor

Memory barriers: definition

Memory barrier

- Hardware-specific machine instruction that helps to enforce some kind of ordering between memory operations
- Affects **current** processor
- But actually we need to prevent reordering of memory operations **as they seen by other processors**

Memory barriers: definition

Memory barrier

- Hardware-specific machine instruction that helps to enforce some kind of ordering between memory operations
- Affects **current** processor
- But actually we need to prevent reordering of memory operations **as they seen by other processors**

Do not forget to insert memory barriers on both sides of communication protocol!

Memory barriers: definition

Memory barrier

- Hardware-specific machine instruction that helps to enforce some kind of ordering between memory operations
- Affects **current** processor
- But actually we need to prevent reordering of memory operations **as they seen by other processors**

Do not forget to insert memory barriers on both sides of communication protocol!
Semantics is very architecture-specific:

- `x86_64` – `mfence`, `lock` prefix
- `arm64` – `dmb`
- `power` – `sync`, `lwsync`

Memory barriers: definition

Memory barrier

- Hardware-specific machine instruction that helps to enforce some kind of ordering between memory operations
- Affects **current** processor
- But actually we need to prevent reordering of memory operations **as they seen by other processors**

Do not forget to insert memory barriers on both sides of communication protocol!
Semantics is very architecture-specific:

- `x86_64` – `mfence`, `lock` prefix
- `arm64` – `dmb`
- `power` – `sync`, `lwsync`

Described in many pages of architecture manual.

Memory barriers: definition

Memory barrier

- Hardware-specific machine instruction that helps to enforce some kind of ordering between memory operations
- Affects **current** processor
- But actually we need to prevent reordering of memory operations **as they seen by other processors**

Do not forget to insert memory barriers on both sides of communication protocol!
Semantics is very architecture-specific:

- `x86_64` – `mfence`, `lock` prefix
- `arm64` – `dmb`
- `power` – `sync`, `lwsync`

Described in many pages of architecture manual. Inconvenient.

Memory barriers: taxonomy

Memory barrier

- Hardware-specific machine instruction that helps to enforce some kind of ordering between memory operations
- Affects **current** processor
- Should be used on both sides of communication protocol

Memory barriers: taxonomy

Memory barrier

- Hardware-specific machine instruction that helps to enforce some kind of ordering between memory operations
- Affects **current** processor
- Should be used on both sides of communication protocol

Simplified taxonomy of memory barriers:

- `Store_Store`, `Store_Load`, `Load_Store`, `Load_Load`

Memory barriers: taxonomy

Memory barrier

- Hardware-specific machine instruction that helps to enforce some kind of ordering between memory operations
- Affects **current** processor
- Should be used on both sides of communication protocol

Simplified taxonomy of memory barriers:

- `Store_Store`, `Store_Load`, `Load_Store`, `Load_Load`

```
int x = static.data1;
Store_Store();
Store_Load();
int y = static.data2;
static.data3 = 17;
```

```
int x = static.data1;
Load_Load();

int y = static.data2;
static.data3 = 17;
```

Memory barriers: rule of thumb

Memory barriers: rule of thumb

Do not use them!

Memory barriers: rule of thumb

Do not use them! Seriously!

Memory barriers: rule of thumb

Do not use them! Seriously!
Every modern language supports civilized concurrency and provides plenty of useful tools:

Memory barriers: rule of thumb

Do not use them! Seriously!

Every modern language supports civilized concurrency and provides plenty of useful tools:

- design-level abstractions – `Executor`, `Future`, `ParallelStream` ...

Memory barriers: rule of thumb

Do not use them! Seriously!

Every modern language supports civilized concurrency and provides plenty of useful tools:

- design-level abstractions – `Executor`, `Future`, `ParallelStream` ...
- concurrent data structures – `Lock`, `Semaphore`, `CountDownLatch`, `Monitor` ...

Memory barriers: rule of thumb

Do not use them! Seriously!
Every modern language supports civilized concurrency and provides plenty of useful tools:

- design-level abstractions – `Executor`, `Future`, `ParallelStream` ...
- concurrent data structures – `Lock`, `Semaphore`, `CountDownLatch`, `Monitor` ...
- atomic read-modify-write operations - `getAndSet`, `compareAndExchange`, `getAndAdd` ...

Memory barriers: rule of thumb

Do not use them! Seriously!

Every modern language supports civilized concurrency and provides plenty of useful tools:

- design-level abstractions – `Executor`, `Future`, `ParallelStream` ...
- concurrent data structures – `Lock`, `Semaphore`, `CountDownLatch`, `Monitor` ...
- atomic read-modify-write operations - `getAndSet`, `compareAndExchange`, `getAndAdd` ...

Memory barriers are needed to:

- implement basics (writing your own OS, compiler, VM)

Memory barriers: rule of thumb

Do not use them! Seriously!

Every modern language supports civilized concurrency and provides plenty of useful tools:

- design-level abstractions – `Executor`, `Future`, `ParallelStream` ...
- concurrent data structures – `Lock`, `Semaphore`, `CountDownLatch`, `Monitor` ...
- atomic read-modify-write operations - `getAndSet`, `compareAndExchange`, `getAndAdd` ...

Memory barriers are needed to:

- implement basics (writing your own OS, compiler, VM)
- get CRITICAL performance

Memory barriers: rule of thumb

Do not use them! Seriously!

Every modern language supports civilized concurrency and provides plenty of useful tools:

- design-level abstractions – `Executor`, `Future`, `ParallelStream` ...
- concurrent data structures – `Lock`, `Semaphore`, `CountDownLatch`, `Monitor` ...
- atomic read-modify-write operations - `getAndSet`, `compareAndExchange`, `getAndAdd` ...

Memory barriers are needed to:

- implement basics (writing your own OS, compiler, VM)
- get CRITICAL performance and spend a lot of resources to maintain the code

Memory barriers: rule of thumb

Do not use them! Seriously!

Every modern language supports civilized concurrency and provides plenty of useful tools:

- design-level abstractions – `Executor`, `Future`, `ParallelStream` ...
- concurrent data structures – `Lock`, `Semaphore`, `CountDownLatch`, `Monitor` ...
- atomic read-modify-write operations - `getAndSet`, `compareAndExchange`, `getAndAdd` ...

Memory barriers are needed to:

- implement basics (writing your own OS, compiler, VM)
- get CRITICAL performance and spend a lot of resources to maintain the code
- design useful concurrent programming language (see you at next Lecture)

Lecture plan

1. Preliminary discussion
2. Cache coherency
3. Hardware optimizations
   - Store buffering
   - Load buffering
   - Optional: Invalidate Queues
   - Interconnect topology
4. Hardware memory model
5. Memory barriers
6. Litmus tests
7. Summary

Litmus test: definition

- **Litmus test**: very small concurrent program that access few shared variables and illustrates some relaxed-memory phenomena

Litmus test: definition

- **Litmus test**: very small concurrent program that access few shared variables and illustrates some relaxed-memory phenomena

Coherence (CoRR1)

Initial state: `x = 1`, Forbidden: `r1 = 2, r2 = 1`

```
void threadA() {
      x = 2;
}
```

```
void threadB() {
    int r1 = x;
    int r2 = x;
}
```

Litmus test: definition

- **Litmus test**: very small concurrent program that access few shared variables and illustrates some relaxed-memory phenomena

Coherence (CoRR1)

Initial state: `x = 1`, Forbidden: `r1 = 2, r2 = 1`

```
void threadA() {
      x = 2;
}
```

```
void threadB() {
    int r1 = x;
    int r2 = x;
}
```

Store buffering

```
mov [x] , 1  # (A.1)
mov EAX , [y] # (A.2)
```

```
mov [y] , 1  # (B.1)
mov EBX, [x] # (B.2)
```

Hardware allows: (EAX=0 EBX=0)

Litmus test

Litmus tests are basic building blocks to construct reliable concurrent primitives

Litmus test

Litmus tests are basic building blocks to construct reliable concurrent primitives

- Help to get "relaxed ordering" right

Litmus test

Litmus tests are basic building blocks to construct reliable concurrent primitives

- Help to get "relaxed ordering" right
- May be empirically checked against (new version of) hardware

Litmus test

Litmus tests are basic building blocks to construct reliable concurrent primitives

- Help to get "relaxed ordering" right
- May be empirically checked against (new version of) hardware
- Minimize "problematic surface" of concurrency library

Litmus test

Litmus tests are basic building blocks to construct reliable concurrent primitives

- Help to get "relaxed ordering" right
- May be empirically checked against (new version of) hardware
- Minimize "problematic surface" of concurrency library
- Could be engineered as cross-platform functions (with different implementations)

Litmus test

Litmus tests are basic building blocks to construct reliable concurrent primitives

- Help to get "relaxed ordering" right
- May be empirically checked against (new version of) hardware
- Minimize "problematic surface" of concurrency library
- Could be engineered as cross-platform functions (with different implementations)
- Used to illustrate weak memory model related bug in complicated protocol[10,11]

[10] ... this one bite us hard and scare the %$^ out of us https://groups.google.com/g/mechanical-sympathy/c/QbmpZxp6C64

[11] Fix https://github.com/torvalds/linux/commit/76835b0ebf8a7fe85beb03c75121419a7dec52f0

Litmus test

Litmus tests are basic building blocks to construct reliable concurrent primitives

- Help to get "relaxed ordering" right
- May be empirically checked against (new version of) hardware
- Minimize "problematic surface" of concurrency library
- Could be engineered as cross-platform functions (with different implementations)
- Used to illustrate weak memory model related bug in complicated protocol[10,11]
- Could be used to provide non-portable yet highly efficient algorithms[12]

[10] ... this one bite us hard and scare the %$^ out of us https://groups.google.com/g/mechanical-sympathy/c/QbmpZxp6C64

[11] Fix https://github.com/torvalds/linux/commit/76835b0ebf8a7fe85beb03c75121419a7dec52f0

[12] Section 4 "Linux x86 SpinLock implementation" in https://dl.acm.org/doi/pdf/10.1145/1785414.1785443

Litmus test

Litmus tests are basic building blocks to construct reliable concurrent primitives

- Help to get "relaxed ordering" right
- May be empirically checked against (new version of) hardware
- Minimize "problematic surface" of concurrency library
- Could be engineered as cross-platform functions (with different implementations)
- Used to illustrate weak memory model related bug in complicated protocol[10,11]
- Could be used to provide non-portable yet highly efficient algorithms[12]
- Well-studied problem domain

[10] ... this one bite us hard and scare the %$^ out of us https://groups.google.com/g/mechanical-sympathy/c/QbmpZxp6C64

[11] Fix https://github.com/torvalds/linux/commit/76835b0ebf8a7fe85beb03c75121419a7dec52f0

[12] Section 4 "Linux x86 SpinLock implementation" in https://dl.acm.org/doi/pdf/10.1145/1785414.1785443

Summary

Cache coherency

- Cache line: granularity, false sharing, tagging with extra info
- Cache coherency protocol: states, transitions, message passing, coherency

Hardware optimizations

- Store buffering, Load buffering, Invalidate Queues, Interconnect topology

Hardware memory model

- Reorderings of memory operations on independent memory locations
- Weak (relaxed) consistency

Memory barriers

- Architecture-specific, Affect local CPU only, Different kinds
- `{Store,Load}_{Store,Load}` taxonomy

Litmus tests

- Basic blocks for many key concurrent algorithms
- Empirical approach to building reliable concurrent software

Summary: homework

"Is Parallel Programming Hard, And, If So, What Can You Do About It" (perfbook) Appendix B "Why Memory Barriers?"

- section B.1 "Cache Structure". Be ready to draw and explain what is associative hardware cache.
- section B.2.4 "MESI Protocol Example"