elhanann 9/30/2025, 17:06:50 Released

Rev.No.: 29	Alteration: REDRAW	Date: 16/12/02	Name: zafrir_m

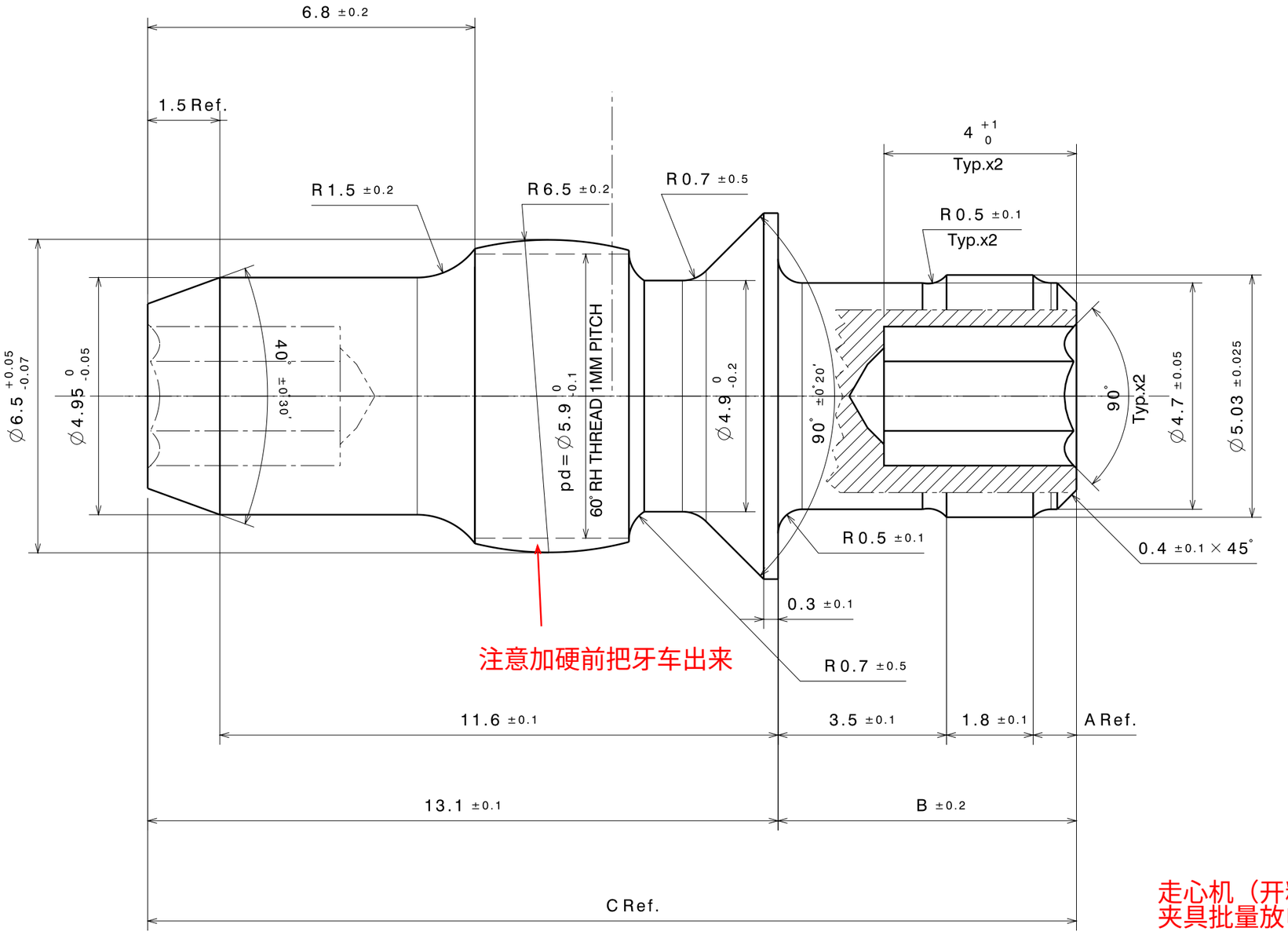

注意加硬前把牙车出来

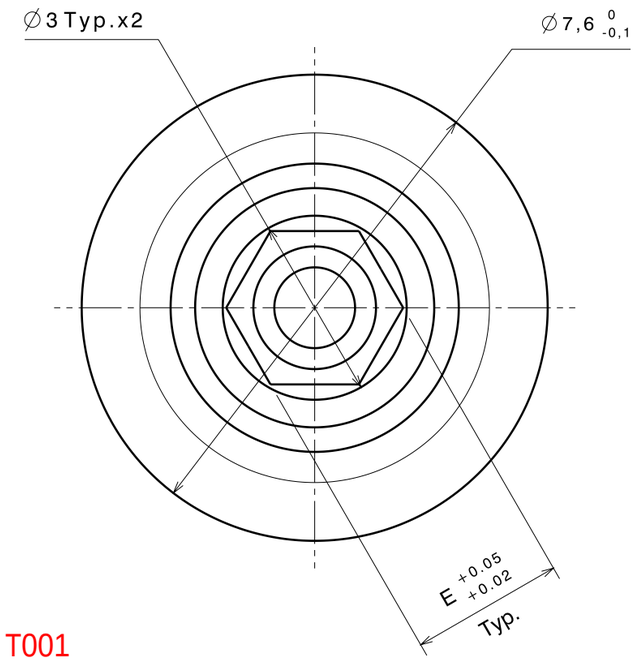

客户：T001
材料：H13 OR 1.2344
表处：硬化和回火至480-540HV(48-54 HRC)
黑色氧化处理涂油
交期：10-25
数量：100件

走心机（开粗，牙要提前车出来）-热处理-走心机精车-EDM（做夹具批量放电）-钳-表处-检包-出货

DESIGNATION	A	B	C	E
ZN-43M	0.9	6.2	19.3	2.5
ZN-44M	2.4	7.7	20.8	2.5

REMARKS:
1) H13 OR 1.2344 steel.
2) Hardened and tempered to 480-540 HV (48-54 HRC).
3) Black oxide finish,oiled.

Unspecified Tolerances		Name	Date	Customer: -.-	-.-
Dim.s: js 14	Draw	-.-	-.-	Designation: ZN-4#M	Dwg.No. 17-201
	Design	Philip Sh.	7/8/96		
Angles: ±1°	Check	-.-	-.-	Description: LOCK PIN Draw	Rev. No. 29
	Appr.	Rafi S	7/8/96	-.-	
	Scale:	-.-		-.-	Reg.No. -.-
				-.-	

Copyright © this Drawing & Design is Confidential Property of Iscar Ltd. Tefen Israel and no part of it may be reproduced or conveyed otherwise without documented consent of Iscar Ltd.