Pattern Recognition 148 (2024) 110152

Contents lists available at ScienceDirect

Pattern Recognition

journal homepage: www.elsevier.com/locate/pr

YOLOPX: Anchor-free multi-task learning network for panoptic driving perception

Jiao Zhan [a], Yarong Luo [a], Chi Guo [a,b,*], Yejun Wu [c], Jiawei Meng [d], Jingnan Liu [a]

[a] Research Center of GNSS, Wuhan University, Wuhan, China
[b] Hubei Luojia Laboratory, Wuhan, China
[c] School of Computer Science, Wuhan University, Wuhan, China
[d] School of Geodesy and Geomatics, Wuhan University, Wuhan, China

ARTICLE INFO

Dataset link: https://bdd-data.berkeley.edu/, https://github.com/jiaoZ7688/YOLOPX

Keywords:
Multi-task learning
Panoptic driving perception
Autonomous driving
Anchor-free

ABSTRACT

Panoptic driving perception encompasses traffic object detection, drivable area segmentation, and lane detection. Existing methods typically utilize anchor-based multi-task learning networks to complete this task. While these methods yield promising results, they suffer from the inherent limitations of anchor-based detectors. In this paper, we propose YOLOPX, a simple and efficient anchor-free multi-task learning network for panoptic driving perception. To the best of our knowledge, this is the first work to employ the anchor-free detection head in panoptic driving perception. This anchor-free manner simplifies training by avoiding anchor-related heuristic tuning, and enhances the adaptability and scalability of our multi-task learning network. In addition, YOLOPX incorporates a novel lane detection head that combines multi-scale high-resolution features and long-distance contextual dependencies to improve segmentation performance. Beyond structure optimization, we propose optimization improvements to enhance network training, enabling our multi-task learning network to achieve optimal performance through simple end-to-end training. Experimental results on the challenging BDD100K dataset demonstrate the state-of-the-art (SOTA) performance of YOLOPX: it achieves 93.7% recall and 83.3% mAP50 on traffic object detection, 93.2% mIoU on drivable area segmentation, and 88.6% accuracy and 27.2% IoU on lane detection. Moreover, YOLOPX has faster inference speed compared to the lightweight network YOLOP. Consequently, YOLOPX is a powerful solution for panoptic driving perception problems. The code is available at https://github.com/jiaoZ7688/YOLOPX.

1. Introduction

Panoptic driving perception system is a crucial component of autonomous driving. It can capture all available semantic information of surrounding environment, helping the vehicle to make optimal driving decisions. Researchers [1–5] generally agree that the panoptic driving perception system is able to accomplish three fundamental tasks: traffic object detection, drivable area segmentation and lane detection. Traffic object detection allows vehicles to recognize potential collision risks and take appropriate actions. Drivable area segmentation provides a refined understanding of the environment for effective path planning. Lane detection enables proper lane keeping and safe maneuvering. These tasks collectively provide the autonomous driving system with a comprehensive understanding of its surroundings, enabling it to navigate safely and make intelligent decisions. There are many methods to handle these tasks separately. For example, Faster R-CNN [6] and FCOS [7] deal with object detection. PSPNet [8] and DeeplabV3+ [9] are used for semantic segmentation. SCNN [10], ENet-SAD [11] are proposed to perform lane detection. These methods have achieved excellent performance in their respective tasks. However, due to the limited computational resources of the edge-side autonomous driving system, the high latency caused by image processing through three separate networks greatly jeopardizes driving safety. To solve this problem, researchers introduce the multi-task learning networks to perform multiple related tasks simultaneously, where each task can share information to improve generalization and speed up image processing. For example. For example, YOLOP [3], consisting of a shared encoder and three different decoders, is a typical example and it can simultaneously perform three different tasks on the challenging BDD100K dataset [12]. HybridNets [4] improves the performance of YOLOP in terms of network architecture, anchor generation strategy, loss function, etc. YOLOPv2 [5] preserves the core design concepts of YOLOP and HybridNets, but utilizes a more robust network structure and a more efficient training strategy to achieve state-of-the-art (SOTA) performance in terms of accuracy and speed.

* Corresponding author at: Research Center of GNSS, Wuhan University, Wuhan, China.
E-mail address: guochi@whu.edu.cn (C. Guo).

https://doi.org/10.1016/j.patcog.2023.110152
Received 10 May 2023; Received in revised form 11 September 2023; Accepted 20 November 2023
Available online 22 November 2023
0031-3203/© 2023 Elsevier Ltd. All rights reserved.

Despite the commendable performance of existing multi-task learning networks in panoptic driving perception, they suffer from the following drawbacks. Firstly, they build upon anchor-based detectors, which make their detection performance sensitive to the number, size and aspect ratio of the anchors, thus complicating hyperparameters tuning and networks training. In addition, anchor-based methods typically employ clustering analysis to generate a set of dataset-specific fixed anchors during training. These fixed anchors make it difficult to handle objects with large shape variations (especially for small objects) and can hinder the generalization ability of the detector. Secondly, existing networks fail to model long-distance dependencies. They often adopt Feature Pyramid Network (FPN) [13], Path Aggregation Network (PAN) [14], or Bidirectional Feature Pyramid Networks (BiFPN) [15] to capture multi-scale features. However, due to the limited receptive field of the convolutional layer, they struggle to establish long-distance contextual dependencies. This impairs the effective propagation of information over long distances and occlusions, causing performance degradation. Finally, training optimization poses a challenge. For example, YOLOP [3] lacks data augmentation and is therefore not conducive to generalization. HybridNets [4] requires stage-wise training for optimal performance, leading to increasing computational cost. Additionally, existing methods often adopt handcrafted label assigning strategy, leading to fuzzy matching between the predicted boxes and ground truth, ultimately compromising the network's detection performance [3–5].

To remedy the aforementioned three shortcomings, we propose YOLOPX, a simple and efficient anchor-free multi-task learning network for panoptic driving perception. It builds upon a simple meta architecture [3] and consists of a shared encoder and three task-specific decoders. We make the following improvements: (1) We switch YOLOP to an anchor-free manner by replacing YOLOP's detection head with a decoupled one [16]. By eliminating the anchors, we reduce the number of design parameters that require heuristic tuning and other tricks involved (e.g., auto learning bounding box anchors [17], automatically customized anchors [4]), so as to simplify the network training and enhance the network's adaptability to objects with large shape variations. In addition, the anchor-free head can be easily extended to solve other instance-level tasks with minor modification, e.g., PolarMask [18] and ExtremeNet [19] for instance segmentation. As a result, the anchor-free manner also enhances the scalability of our multi-task learning network, which makes it possible to provide richer semantic information and to cover more application scenarios. (2) We propose a lightweight lane detection head that introduces multi-scale high-resolution features to help the network segment small objects/regions. We also integrate Polarized Self-Attention (PSA)-based [20] refinement modules into this head to establish long-distance contextual dependencies and to refine predictions with a little additional computational cost. (3) We propose optimization improvements such as strong data augmentation, model reparameterization [21], SimOTA [16], and a new multi-task loss function, all of which optimize the training process without anchors and additional inference cost, thus enabling our multi-task learning network to achieve optimal performance through simple end-to-end training without alternating optimization or stage-wise training like HybridNets [4].

We conduct extensive experiments on the challenging BDD100K dataset and achieve better performance than previous anchor-based works. The proposed YOLOPX sets the new SOTA of 93.7% recall and 83.3% mAP50 on traffic object detection, 93.2% mIoU on drivable area segmentation, 88.6% accuracy and 27.2% IoU on lane detection, as qualitatively illustrated in Fig. 1. Compared to lightweight YOLOP and HybridNets, our method significantly outperforms them while the inference speed (47 FPS) is faster than YOLOP (39 FPS) and HybridNets (17 FPS) on the NVIDIA RTX 3080, making our method sufficient for real-time running. Compared to the previous SOTA YOLOPv2, our method achieves better performance with fewer parameters (6M fewer than YOLOPv2).

The contributions of this work can be summarized as the follows:

(1) We propose YOLOPX, a simple and efficient anchor-free multi-task learning network for panoptic driving perception. To the best of our knowledge, this is the first work to employ the anchor-free detection head in pan-optic driving perception.
(2) We propose a lightweight lane detection head that improves segmentation utilizing multi-scale high-resolution features and long-distance contextual dependencies.
(3) We propose optimization improvements to enhance network training, enabling our multi-task learning network to achieve optimal performance through simple end-to-end training.
(4) We empirically validate our YOLOPX on the challenging BDD100K dataset and demonstrate the effectiveness of the proposed YOLOPX by achieving SOTA performance.

2. Related works

Object detection. Object detection aims to locate and classify objects within images. Two main methods have emerged: anchor-based and anchor-free methods. Anchor-based methods, such as Faster R-CNN [6] and YOLOv7 [17], first set many prior anchors of various sizes and aspect ratios in the image, and then predict offsets relative to these anchors. These methods perform well, but generally suffer from the inherent limitations of anchor-based detectors, e.g., high sensitivity of the detection performance to anchor-related hyperparameters and difficulty in handling objects with large shape variations. To eliminate the limitations caused by anchor-based detectors, anchor-free detectors have been proposed in recent years. For example, CenterNet [22] directly predicts the center and bounding box of an object without relying on anchors, simplifying detection and achieving competitive accuracy. As a result, it finds widespread use in practical applications such as autonomous driving [23] and clothes image search [24]. Despite its good performance, CenterNet struggles to objects with large shape variations, especially for small objects common in the real world. To enhance the network's perception capabilities, researchers employ various helpful tricks, including hierarchical feature fusion, data augmentation, optimized label assignment, and Super-Resolution (SR) [25, 26] et al. For instance, FCOS [7] employs a multi-scale prediction method to detect objects of various sizes on FPN features. YOLOX [16] maintains the fundamental design concepts of CenterNet and FCOS, but incorporates additional enhancements like PAN, data augmentation and optimized label assignment to further enhance the network's adaptability to various objects. EFPN [27] employs a novel SR module called Feature Texture Transfer (FTT) and a foreground-background-balanced loss function for better small object detection. DETR [28] and Deformable DETR [29] are representative of transformer-based anchor-free detectors, which deliver exceptional performance but tend to be computationally intensive, making real-time operation difficult. In this work, we employ the anchor-free detector YOLOX, as it achieves a good balance between speed, accuracy, and computational complexity.

Semantic segmentation. Semantic segmentation plays a critical role in understanding the context of images at a pixel-level granularity. For semantic segmentation, multi-scale high-resolution features are critical as they enable the network to obtain extensive contextual information and facilitate precise pixel-level predictions, especially for small objects/regions. Many methods benefit from these features and achieve outstanding performance. For example, PSPNet [8] employs a global pyramid pooling, effectively capturing multi-scale contextual information and elevating segmentation accuracy. DeeplabV3+ [9] introduces the atrous spatial pyramid pooling (ASPP) module to extract multi-scale information from input images, and employs skip connections to combine features from different scales, resulting in significant advances in accuracy and scale awareness. Nevertheless, due to the limited receptive field of the convolutional layer, these methods fail to obtain long-distance information, thus making it necessary to introduce non-local operations [30]. For example, SETR [31] introduces shift-equivariant self-attention to enhance spatial reasoning and

Fig. 1. Multi-task predictions of YOLOPX in day-time and night-time. The green areas are the drivable area, the red lines are the lane lines, and the yellow boxes are the traffic objects. (For interpretation of the references to color in this figure legend, the reader is referred to the web version of this article.)

leverages transformers to capture long-distance contextual dependencies. In this work, drivable area segmentation and lane detection are typical semantic segmentation problems, where each pixel is assigned a foreground or background label, indicating whether it belongs to a drivable area or a lane line [32]. Consequently, the introduction of multi-scale high-resolution features and the incorporation of long-distance contextual dependencies are very beneficial for improving the prediction performance.

Multi-task learning. Multi-task learning aims at training a model to perform multiple related tasks simultaneously, where each task can share information for better generalization and faster convergence. Recent works typically build upon the encoder–decoder architecture, where the encoder extracts and fuses features, followed by multiple task-special decoders implementing different predictions. For example, Mask R-CNN [33], built upon two-stage detector Faster R-CNN, is the representative. It can accomplish object detection and instance segmentation simultaneously by adding a parallel instance segmentation branch. In panoptic driving perception, the previous YOLOP [3] achieves impressive performance on three tasks (i.e., traffic object detection, drivable area segmentation, and lane detection) of the challenging BDD100K dataset. However, the simplicity of its structure provides opportunities for refinement. HybridNets [4] improves YOLOP in terms of network architecture, anchor generation strategy, loss function, etc. for better results. The recent YOLOPv2 [5] retains the foundational design concept of YOLOP and HybridNets, but employs a more powerful network structure and a more efficient training strategy to achieve SOTA performance. In this work, we design a novel multi-task learning network to further improve the network performance.

3. Methods

3.1. Network structure

As shown in Fig. 2, YOLOPX is a simple encoder–decoder network consisting of a shared encoder and three task-specific decoders. The shared encoder consists of a backbone network and a neck network, which are responsible for extracting and merging features, respectively. Three task-specific decoders are designed for traffic object detection, drivable area segmentation, and lane detection.

As demonstrated in Fig. 2, first, an input image $I \in \mathbb{R}^{H\times W\times 3}$ goes through a backbone network to extract multi-scale features C_2, C_3, C_4, and C_5, which are 1/4, 1/8, 1/16, and 1/32 of the input resolution, respectively. Second, features C_3, C_4, and C_5 are fed into a neck network to produce features P_3, P_4, and P_5 via a top-down path, and then produce features N_3, N_4 and N_5 via another bottom-up path (Fig. 2a). N_3, N_4, and N_5 are fed into the object detection head (Fig. 2a), P_4 are fed into drivable area segmentation head (Fig. 2c), and the features P_3 and C_2 are fed into lane detection head (Fig. 2d). Third, three task-specific decoders take the corresponding inputs to generate three outputs. Finally, YOLOPX combines the object detection results and semantic segmentation masks to produce a panoptic driving perception output.

3.2. Encoder

The backbone network is used to extract features from images and usually has a significant impact on network performance. Many advanced methods have achieved excellent results using classical backbone networks such as ResNet [34] and EfficientNet [35]. In this work, we employ a powerful backbone network based on the Efficient Layer Aggregation Networks (ELAN) used by YOLOv7 [17], called ELANNet. It allows the network to learn more important features and is more robust compared to the CSPDarknet [36] used by YOLOP.

The neck network can integrate multi-scale features and provide rich contextual information for subsequent prediction heads. Several types of neck networks have been proposed in previous works, such as FPN, BiFPN and PAN. YOLOP employs PAN embedded with the Spatial Pyramid Pooling (SPP) module as the neck network, which integrates multi-scale features via top-down and bottom-up paths. To further improve performance, we employ YOLOv7's PAN embedded with the SPPCSPC module as the neck network for better integration of multi-scale features. In addition, to mitigate the increasing computation and parameters caused by the complex SPPCSPC module, we incorporate the Ghost Convolution [37] to efficiently generates features through parameter sharing while minimizing accuracy loss. Further details are shown in Fig. 2(a). Overall, our encoder efficiently captures multi-scale high-resolution features while maintaining a balance between accuracy and computational cost.

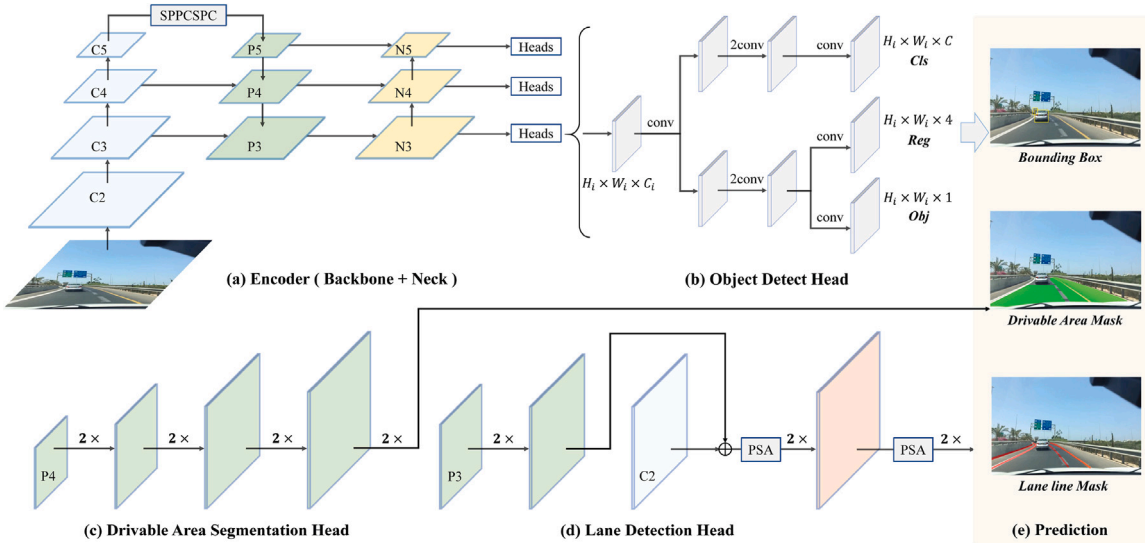

Fig. 2. YOLOPX is a unified encoder–decoder network, consisting of one shared encoder and three different decoders (i.e., object detection head, drivable area segmentation head, and lane detection head). The SPPCSPC module is embedded in the encoder. PSA denotes the PSA-based refinement module embedded in lane detection head. Orange layer denotes features with long-distance contextual dependencies. **2×** denotes an up-sampling operation, consisting of a set of convolutional layers and a bilinear interpolation up-sampling. $\oplus$ denotes matrix addition. *Cls*, *Reg*, and *Obj* denote classification probability, position information and object confidence of the predicted box, respectively. (For interpretation of the references to color in this figure legend, the reader is referred to the web version of this article.)

3.3. Decoder

Object detection head. To eliminate anchors, we replace YOLOP's detection head with a decoupled one used in anchor-free detector YOLOX [16]. This decoupled detection head can detect objects of varying sizes on multi-scale features by an anchor-free multi-scale prediction method. Specifically, for each scale of PAN features $H_i \times W_i \times C_i$ ($i \in 3, 4, 5$ denotes different scales), we first adopt a 1×1 convolutional layer to reduce the channel dimension to 192, followed by two parallel branches with two 3×3 convolutional layers for classification and regression tasks respectively. The object branch is added to the regression branch. Finally, three task branches adopt a 1×1 convolutional layer respectively to output the prediction results: (1) The classification branch outputs the classification probability of the predicted box with the size $H_i \times W_i \times C$, where C denotes the number of classes. (2) The object branch outputs the object confidence of the predicted box with the size $H_i \times W_i \times 1$. (3) The regression branch outputs the position information (i.e., two offsets in terms of the left-top corner of the grid, the height and width) of the predicted box with the size $H_i \times W_i \times 4$. More details can be found in Fig. 2(b). Overall, this decoupled design enables our YOLOPX to achieve effective object detection without anchors, while maintaining a relatively small model size and low computational cost.

Drivable area segmentation head. There are many different characteristics between drivable area segmentation and lane detection. For example, lane detection usually involves small regions segmentation, whereas drivable area segmentation focuses on large regions segmentation. If we simply adopt the same input features to perform two segmentation tasks as in YOLOP, it may lead to mutual interference between these tasks, thus impairing the network performance. Inspired by previous works [5,38,39], we employ a feature decoupling strategy to supply different features for each task. For drivable area segmentation, the lower-resolution features are sufficient to achieve accurate predictions. Hence, we only adopt the lower-resolution P_4 as input features and restore them to the shape of H × W through four up-sampling operations. More details can be found in Fig. 2(c).

Lane detection head. For lane detection, as the lane line generally occupies a relatively small area in an image, it is necessary to use high-resolution features C_2 to capture more details. However, the features C_2 are susceptible to noise because they originate from earlier layers. To mitigate noise interference, we use P_3, which provide high-quality multi-scales information. Specifically, we first up-sample P_3 to the shape of $\frac{H}{4} \times \frac{W}{4}$ and then combine them with C_2. Finally, we restore the resulting features to the shape of $H \times W$ through three up-sampling operations. Although this manner captures contextual information at different scales, it fails to establish long-distance contextual dependencies and is not beneficial for information propagation over long distances or across occlusions. To solve this problem, we embed two PSA-based refinement modules into the lane detection head. The refinement modules are based on the Polarized Self-Attention (PSA) mechanisms [20], which is a lightweight self-attention mechanism and can decouple the direction and magnitude of the features to improve the efficiency and effectiveness of non-local operations. By this refinement module, we can effectively establish long-distance contextual dependencies with a little additional computational cost. It is noteworthy that we do not use this refinement module in the drivable area segmentation head, as we find it adversely affects the network performance. More details are given in Fig. 2(d).

3.4. Training strategy

Optimization tricks. To optimize the network training, we adopt the following tricks: (1) We employ a strong data augmentation consisting of Albumentations, Mosaic, and MixUp. Albumentations [40] provides a range of simple but effective image augmentation operations, while Mosaic [41] and MixUp [42] are widely-used efficient augmentation techniques in YOLO series. The network trained under this strategy exhibits excellent robustness and generalization. (2) We use model reparameterization to merge multiple computational modules into an equivalent module during inference [21]. This technique reduces network complexity without sacrificing accuracy. (3) To solve the problem of fuzzy matching between the predicted boxes and ground truth caused by handcrafted label assigning strategy, we adopt SimOTA [16], which addresses label assignment from a global perspective and enhances network detection performance.

Loss function. One challenge in multi-task learning is to properly combine and tune multiple losses, which are crucial for balancing each task branch and achieving optimal overall performance. In this work, our multi-task loss contains three parts. For the object detection loss

$\mathcal{L}_{det}$, since we employ YOLOX's decoupled detection head, we accordingly replace YOLOP's detection loss with that of YOLOX. Specifically, $\mathcal{L}_{det}$ is a weighted sum of classification loss $\mathcal{L}_{cls}$, object loss $\mathcal{L}_{obj}$, and regress loss $\mathcal{L}_{reg}$ as in Eq. (1).

$$\mathcal{L}_{det} = \lambda_{cls}\mathcal{L}_{cls} + \lambda_{obj}\mathcal{L}_{obj} + \lambda_{reg}\mathcal{L}_{reg} \tag{1}$$

where $\mathcal{L}_{cls}$ and $\mathcal{L}_{obj}$ are Binary Cross-Entropy (BCE) loss, $\mathcal{L}_{reg}$ is IoU loss. $\mathcal{L}_{cls}$ is used for penalizing classification and $\mathcal{L}_{obj}$ is used for the object confidence. $\mathcal{L}_{reg}$ reflects the distance of overlap rate, aspect ratio and scale similarity between the predicted box and ground truth. λ_{cls}, λ_{obj}, and λ_{reg} are hyperparameter weights to balance three parts of $\mathcal{L}_{det}$, which are tuned to 1.0, 1.0 and 5.0 respectively as in YOLOX.

For drivable area segmentation loss $\mathcal{L}_{da}$, we employ the BCE loss to minimize the pixel-level classification error between the prediction mask and ground truth. For lane detection loss $\mathcal{L}_{ll}$, unlike the combination of BCE loss and IoU loss used by YOLOP, we employ a combination of Focal loss $\mathcal{L}_{focal}$ [43] with $\alpha = 0.25$, $\gamma = 2.0$ and Tversky loss $\mathcal{L}_{tv}$ [44] with $\alpha = 0.7$, $\beta = 0.3$. $\mathcal{L}_{focal}$ is used to alleviate class imbalance in lane detection, where positive samples are often notably fewer than their negative counterparts. Concurrently, $\mathcal{L}_{tv}$ is leveraged to enhance the penalty for false positives, as our network produces more false positives during training. $\mathcal{L}_{ll}$ is defined as follows:

$$\mathcal{L}_{ll} = \mathcal{L}_{focal} + \mathcal{L}_{tv} \tag{2}$$

$$\mathcal{L}_{focal} = -\frac{1}{N}\sum_{c=0}^{c-1}\sum_{n=1}^{N} g_n(c)(1-p_n(c))^{\gamma} log(p_n(c)) \tag{3}$$

$$\mathcal{L}_{tv} = C - \sum_{c=0}^{c-1}\frac{TP_p(c)}{TP_p(c) + \alpha FP_p(c) + \beta FN_p(c)} \tag{4}$$

$$TP_p(c) = \sum_{n=1}^{N} p_n(c)g_n(c) \tag{5}$$

$$FP_p(c) = \sum_{n=1}^{N} p_n(c)(1-g_n(c)) \tag{6}$$

$$FN_p(c) = \sum_{n=1}^{N} (1-p_n(c))g_n(c) \tag{7}$$

where $TP_p(c)$, $FP_p(c)$, and $FN_p(c)$ are true positives, false positives, and false negatives. $p_n(c)$ is the predicted probability that pixel n belongs to class c, and $g_n(c)$ is the corresponding ground truth. C is the total number of classes and N is the total number of pixels in the input image.

In summary, our multi-task loss is defined as follows:

$$\mathcal{L}_{ml} = \lambda_{det}\mathcal{L}_{det} + \lambda_{da}\mathcal{L}_{da} + \lambda_{ll}\mathcal{L}_{ll} \tag{8}$$

where λ_{det}, λ_{da}, and λ_{ll} are hyperparameter weights. We tune both λ_{da} and λ_{ll} to be 0.2 as in YOLOP. In addition, we tune λ_{det} to be 0.02 to balance the detection loss with the other two losses during training.

4. Experiments

4.1. Training settings

Dataset. We perform extensive experiments on the BDD100K dataset, which consists of a training set, a validation set, and a test set, with 70K, 20K, and 10K images, respectively. The dataset contains images in different weather conditions (e.g., sunny, snowy, cloudy, foggy, rainy) and driving scenes (e.g., rural roads, urban roads, traffic jam scenes). Consequently, the network trained on this dataset exhibits remarkable robustness and generalization. Following the common practice [3–5,11]: (1) We train YOLOPX on the training set and evaluate it on the validation set. (2) We scale the original image from 1280 × 720 to 640 × 384. (3) Four object detection classes (car, truck, bus, train) are merged into one (vehicle), and two drivable area segmentation classes (direct, alternative) are merged into one (drivable). (4) To simplify training, the lane lines in the BDD100K dataset, which are labeled with two lines, are converted to center lines, and the width of the center lines are set to 8 pixels in the training set and 2 pixels in the test set.

Table 1
Comparison of experimental results on computation cost.

Method	Backbone	Input size	Params	Speed (FPS)
YOLOP	CSPDarknet	640 × 384	**7.9M**	39
HybridNets	EfficientNet	640 × 384	12.8M	17
YOLOPX	ELANNet	640 × 384	32.9M	**47**

Training Details. We implement our YOLOPX on the Pytorch framework [45]. Our network is trained with AdamW [46] optimizer for 200 epochs with an initial learning rate of 0.001 and a minibatch of 32 images on NVIDIA Tesla V100. To ensure stable training, a warmup strategy of 3 epochs is applied to the network. The Cosine Annealing is used to adjust the learning rate and the momentum is set as 0.937. It is worth noting that our models are not fine-tuned using pretrained models.

4.2. Main results

To demonstrate the effectiveness of YOLOPX, we compare it to multiple excellent multi-task learning networks as well as networks that focus on a single task on the BDD100k dataset. The multi-task learning networks YOLOP, HybridNets and YOLOPv2 have achieved excellent results in object detection, drivable area segmentation and lane detection tasks. MultiNet [47] and DLT-Net perform well in object detection and drivable area segmentation tasks. Faster R-CNN and YOLOv5s are outstanding representatives of the two-stage object detection network and the one-stage object detection network, respectively. PSPNet is an outstanding representative of the semantic segmentation network. ENet [48], SCNN [10] and ENet-SAD [49] are used for detecting lanes and achieve excellent performance. The main results of the comparison experiments are described below.

4.2.1. Computation cost

We first compare the computational cost of YOLOP, HybridNets, and YOLOPX on the NVIDIA RTX 3080. As presented in Table 1, YOLOPX has more parameters than the lightweight YOLOP and HybridNets because it uses a stronger backbone network. In terms of real-time, we compare the inference speed (excluding data preprocessing and NMS operations) at batch size 1. It is clear from the results that YOLOPX achieves an outstanding inference speed, faster than YOLOP and HybridNets, due to its excellent network structure and model reparameterization technique. Our results demonstrate that YOLOPX is an efficient solution for completing panoptic driving perception in real-time.

4.2.2. Traffic object detection

Following common practice, we use Recall and mAP50 as the evaluation metrics, and set the confidence threshold and NMS threshold to 0.001 and 0.6, respectively. Meanwhile, we only detect the vehicle class on the BDD100K dataset. As shown in Table 2, YOLOPX achieves the best recall with 93.7%, which outperforms YOLOP by 4.5% and YOLOPv2 by 2.6%. In terms of mAP50, our YOLOPX outperforms YOLOP by 6.8% and is competitive with YOLOPv2. Overall, our YOLOPX sets a new SOTA for traffic object detection.

4.2.3. Drivable area segmentation

Following common practice, we use mIoU as the evaluation metric and only evaluate the drivable class segmentation results. The experimental results are shown in Table 3, our network also achieves the SOTA performance with 93.2% mIoU.

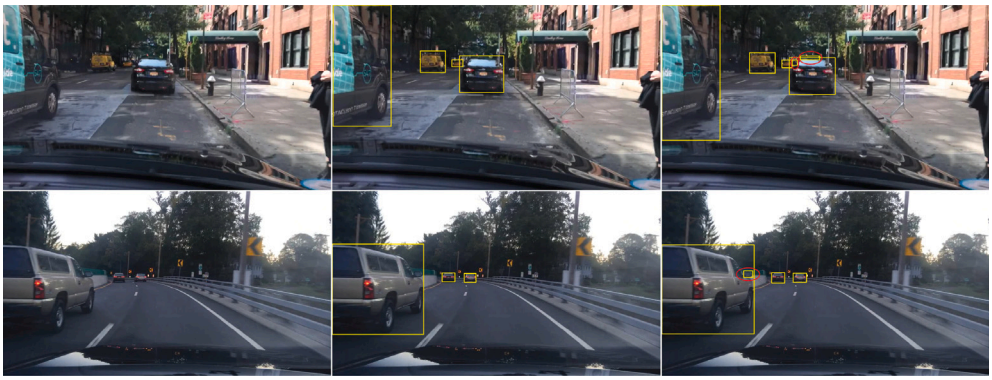

Fig. 3. Traffic object detection results of YOLOPX. The columns from left to right are the images, the ground truth and the prediction results. The yellow boxes are the traffic objects. The red ellipses indicate false positives. (For interpretation of the references to color in this figure legend, the reader is referred to the web version of this article.)

Table 2
Comparison of experimental results on traffic object detection.

Method	Recall (%)	mAP50 (%)
MultiNet	81.3	60.2
DLT-Net	89.4	68.4
Faster R-CNN	77.2	55.6
YOLOv5s	86.8	77.2
YOLOP	89.2	76.5
HybridNets	92.8	77.3
YOLOPv2	91.1	**83.4**
YOLOPX	**93.7**	83.3

Table 3
Comparison of experimental results on drivable area segmentation.

Method	mIoU (%)
MultiNet	71.6
DLT-Net	71.3
PSPNet	89.6
YOLOP	91.5
HybridNets	90.5
YOLOPv2	**93.2**
YOLOPX	**93.2**

Table 4
Comparison of experimental results on lane detection.

Method	Pixel accuracy (%)	IoU (%)
ENet	34.12	14.64
SCNN	35.79	15.84
ENet-SAD	36.56	16.02
YOLOP	70.50	26.2
HybridNets	85.4	**31.6**
YOLOPv2	87.3	27.2
YOLOPX	**88.6**	27.2

4.2.4. Lane detection

For lane detection, we use pixel accuracy and IoU of lanes as evaluation metrics. In previous works [3–5,11], to simplify training, the width of lane lines in the training set is significantly larger than that in the test set, resulting in larger predictions than the ground truth during evaluation. Therefore, the evaluation metrics IoU are generally low. In contrast, pixel accuracy provides a more accurate reflection of lane detection performance because it directly determines whether the lane lines are accurately and continuously detected. In this work, we focus on optimal pixel accuracy. As shown in Table 4, our network achieves 88.6% SOTA pixel accuracy, which is 18.1% higher than YOLOP, and 1.3% higher than YOLOPv2. In terms of IoU, our IoU is the same as YOLOPv2, but slightly lower than HybridNets. This is because our network is trained through simple end-to-end training (HybridNets uses stage-wise training for best results) and predicts slightly wider lane lines. In practice, we find that our results are significantly more accurate and continuous due to higher pixel accuracy, as shown qualitatively in Fig. 7.

4.3. Comparison analysis

Compared with Baseline. As shown in Table 5, we compare our proposed YOLOPX with the baseline YOLOP on the BDD100K dataset. Several important observations can be drawn from our comparative results: (1) YOLOPX has better robustness and generalization than YOLOP due to the utilization of data augmentation. (2) Since YOLOPX employs a powerful ELAN-Net-based encoder instead of a lightweight CSPDarknet-based encoder used by YOLOP, YOLOPX has more parameters. (3) For traffic object detection, YOLOPX outperforms YOLOP by 4.5% in Recall and 6.8% in mAP50. In addition to utilizing powerful encoder and data augmentation, the significant improvements of YOLOPX are due to the utilization of the anchor-free detection manner and SimOTA. (3) For drivable area segmentation, our YOLOPX outperforms YOLOP by 1.7% in mIoU. The feature decoupling strategy employed by YOLOPX contributes to this performance boost. (4) For lane detection, YOLOPX outperforms YOLOP by 18.1% in Accuracy and 1.0% in IoU. The utilization of multi-scale high-resolution features and the PSA-based refinement module enable YOLOPX to make accurate predictions based on robust features, resulting in YOLOPX having a great advantage in terms of Accuracy. Overall, compared to the previous baseline YOLOP, our anchor-free YOLOPX has significantly better performance but has more parameters.

Compared with SOTA. As shown in Table 6, we present a comprehensive comparative analysis between YOLOPX and YOLOPv2 on the BDD100K dataset. Several key insights emerge from our comparative findings: (1) It is worth noting that we train the network from scratch instead of fine-tuning it using pretrained models. This manner demonstrates the effectiveness of our method. (2) Our network has fewer parameters than YOLOPv2, as we use a simple ELAN rather than a complex Extended Efficient Layer Aggregation Networks (E-ELAN) [17] to construct the network. (3) Both YOLOPv2 and YOLOPX employ data augmentation for network training, and thus both are robust and generalizable. (4) For traffic object detection, our YOLOPX outperforms YOLOPv2 by 2.6% in Recall and is comparable in mAP50. The significant improvement in Recall is mainly attributed to the introduction of the anchor-free decoupled detection head and SimOTA. The decoupled detection head is more adaptable to objects with large shape variations and is especially beneficial for detecting small objects. Consequently, its utilization is conducive to increase true positives (TP), but also false positives (FP) due to the high adaptability to various objects (including unexpected objects, as qualitatively illustrated in Fig. 3). SimOTA optimizes object label assignment globally, improving true positives (TP) while reducing false negatives (FN). However,

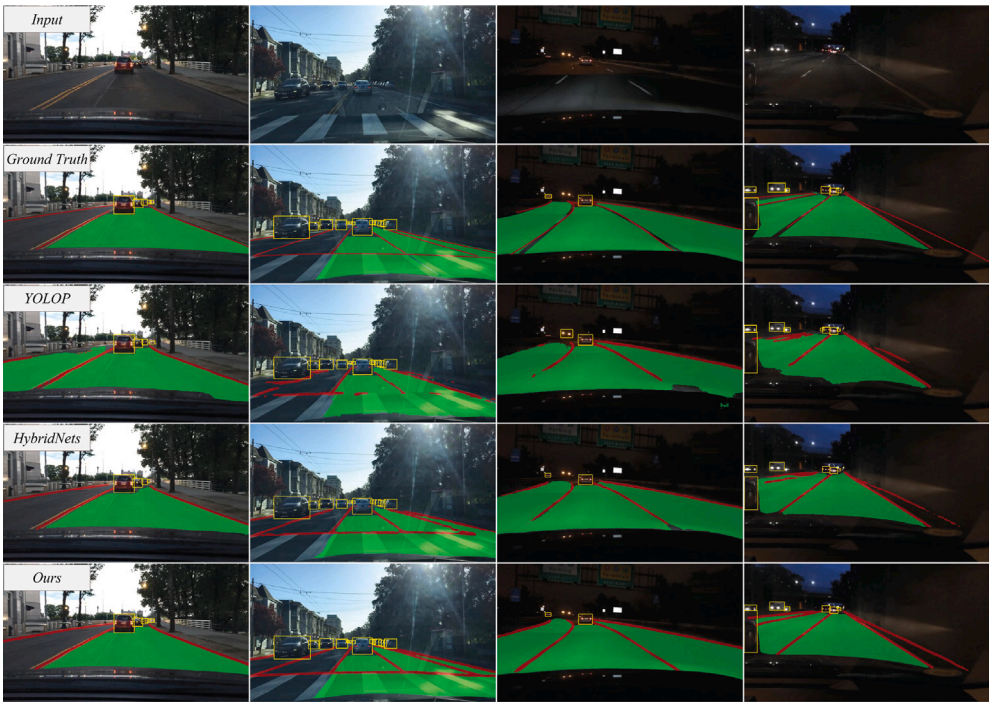

Fig. 4. Comparison of multi-task predictions in day-time and night-time. The green areas are the drivable area, the red lines are the lane lines, and the yellow boxes are the traffic objects. (For interpretation of the references to color in this figure legend, the reader is referred to the web version of this article.)

Table 5
Quantitative comparison with Baseline. DA denotes data augmentation.

Method	Anchor	Fine-tuning	DA	Params	Recall	mAP50	mIoU	Accuracy	IoU
YOLOP	✓	✗	✗	**7.9M**	89.2	76.5	91.5	70.5	26.2
YOLOPX	✗	✗	✓	32.9M(+25M)	**93.7(+4.5)**	**83.3(+6.8)**	**93.2(+1.7)**	**88.6(+18.1)**	**27.2(+1.0)**

Table 6
Quantitative comparison with SOTA. DA denotes data augmentation.

Method	Anchor	Fine-tuning	DA	Params	Recall	mAP50	mIoU	Accuracy	IoU
YOLOPv2	✓	✓	✓	38.9M	91.1	**83.4**	93.2	87.3	27.2
YOLOPX	✗	✗	✓	**32.9M(−6M)**	**93.7(+2.6)**	83.3(−0.1)	**93.2(+0.0)**	**88.6(+1.3)**	**27.2(+0.0)**

SimOTA may result in the network to assign more bounding boxes to objects, some of which may be false positives (FP). Together, these two techniques increase Recall (Recall = TP/(TP+FN)) but decrease Precision (Precision = TP/(TP+FP)). mAP50 is a composite performance metric used to calculate the area under the Precision–Recall curve at a confidence threshold of 0.5. A decrease in Precision leads to a decrease in the area under the Precision–Recall curve, thus decreasing mAP50. Consequently, the observed increasement in Recall is more pronounced than that of mAP50 during evaluation. (5) For drivable area segmentation, our network performs comparably, due to the utilization of the similar encoder and feature decoupling strategy. (6) For lane detection, our network outperforms YOLOPv2 by 1.3% in accuracy. This result is primarily due to the utilization of the multi-scale high-resolution features and PSA-based refinement module, which enable our network to achieve accurate predictions by utilizing more comprehensive contextual information. Overall, compared to the previous SOTA YOLOPv2, our anchor-free YOLOPX achieves better performance with fewer parameters and without using pretrained models.

Qualitative Comparison. We perform a comprehensive comparison of YOLOPX with current open-source models, YOLOP and HybridNets. The confidence threshold and NMS threshold of object detection are set to 0.3 and 0.45, respectively. Meanwhile, the width of the lane lines is extended from 2 pixels to 8 pixels to better visualize the ground truth in the test set. Fig. 4 lists the comparison of multi-task predictions in day-time and night scenes, indicating that our network achieves more accurate predictions in both segmentation tasks. Fig. 5 lists the comparison of traffic object detection separately. We can see the results of YOLOP and HybridNets obviously contains more false negatives (missed detection) and false positives (error detection), while YOLOPX benefited from its decoupled detection head and efficient training strategy to cover objects of various sizes achieves more accurate prediction. Figs. 6 and 7 show the comparison of drivable area segmentation and lane detection, respectively. YOLOP and HybridNets suffer from significant discontinuous or incorrect predictions, leading to detail losses and detail merging. In contrast, our network can employ more comprehensive contextual information to perform accurate semantic segmentation, thereby improving the continuity and positional accuracy of the prediction masks. Overall, these comprehensive comparisons collectively affirm the exceptional performance of our YOLOPX under different tasks.

4.4. Ablation studies

We conduct a comprehensive ablation study of YOLOPX. We use YOLOP as the baseline, which employs the CSPDarknet as the backbone network and the PAN embedded with the SPP module as the neck network. Table 7 presents the results of our ablation study, where Encoder denotes YOLOv7's encoder consisting of the ELANNet and

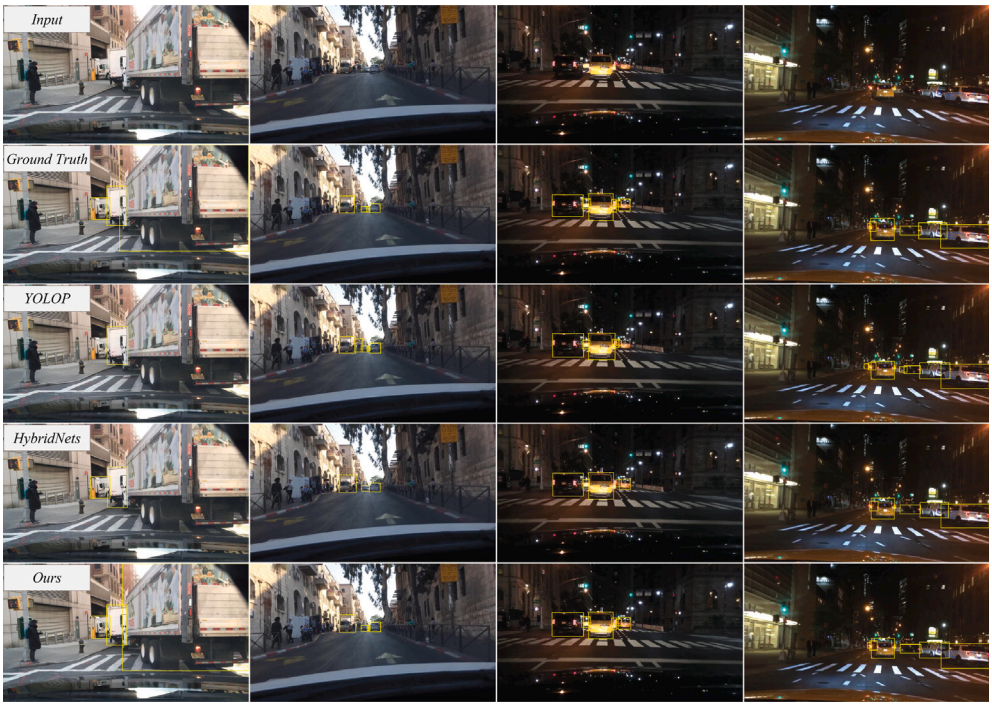

Fig. 5. Comparison of traffic object detection in day-time and night-time. The yellow boxes are the traffic objects. False negatives (column 1, column 3) and false positives (column 2, column 4) occur in YOLOP. Significant false negatives occur in HybridNets. (For interpretation of the references to color in this figure legend, the reader is referred to the web version of this article.)

Fig. 6. Comparison of drivable area segmentation in day-time and night-time. The green areas are the drivable areas. False negatives and false positives occur in YOLOP and HybridNets. In contrast, our results are more accurate and have better boundary location. (For interpretation of the references to color in this figure legend, the reader is referred to the web version of this article.)

the PAN embedded with the SPPCSPC module, GhostConv denotes the Ghost Convolution, Decoupling denotes the feature decoupling strategy used in two semantic segmentation heads, FocalLoss and TverskyLoss denotes the Focal loss and Tversky loss used in the lane detection respectively, Anchor-free denotes the decoupled detection head and the corresponding loss function, SimOTA denotes the label assignment strategy SimOTA, MHF denotes multi-scales high-resolution features, SDA denotes the strong data augmentation, and PSA denotes the PSA-based refinement module. The results demonstrate the following: (1) The utilization of the powerful Encoder improves the prediction performance of the network, but substantially increases the parameters. To mitigate this shortcoming, GhostConv is employed to reduce the

Fig. 7. Comparison of lane detection in day-time and night-time. The red lines are the lane lines. Obvious discontinuity occurs in YOLOP and HybridNets. In contrast, our results are slightly wider but significantly more accurate and continuous.

Table 7
Ablation experiments results.

Method	Recall	mAP50	mIoU	Accuracy	IoU	Params
Baseline	89.2	76.5	91.5	70.5	26.2	**7.9M**
+Encoder	90.5	79.3	92.7	86.5	23.2	31.1M
+GhostConv	88.5	76.6	92.3	82.7	24.0	27.3M
+Decoupling	88.8	77.2	92.9	83.9	25.1	28.5M
+FocalLoss	88.5	77.1	92.9	86.8	24.2	28.5M
+TverskyLoss	89.0	77.5	**93.2**	88.1	23.6	28.5M
+Anchor-free	91.2	80.0	92.8	87.0	23.2	32.7M
+SimOTA	92.7	81.7	92.7	86.2	23.6	32.7M
+MHF	92.3	81.5	92.8	87.2	24.5	32.9M
+SDA	**93.9**	83.1	**93.2**	87.9	26.3	32.9M
+PSA	93.7	**83.3**	**93.2**	**88.6**	**27.2**	32.9M

parameters while maintaining prediction performance. (2) The utilization of Decoupling enhances the network's semantic segmentation, and the adoption of FocalLoss and TverskyLoss further enhances the pixel accuracy of lane detection. (3) By decoupling detection head and corresponding loss functions, we transform YOLOP into an Anchor-free manner, thus enhancing object detection performance. In addition, the utilization of SimOTA further improves the network's object detection result. (4) The introduction of MHF and PSA enables the network to leverage comprehensive contextual information, leading to accurate lane detection. (5) MDA is used to balance and optimize network without additional inference cost, resulting in improved performance and robustness. Overall, the proposed improvements contribute to the enhancement of the network performance.

5. Conclusions

We propose YOLOPX, a simple yet efficient anchor-free multi-task learning network that can simultaneously complete traffic object detection, drivable area segmentation, and lane detection in real-time. Our network builds upon a simple meta architecture and adopts vital improvements for better performance and efficient training. Firstly, we switch YOLOP to an anchor-free manner by replacing YOLOP's detection head with a decoupled one. By eliminating the anchors, we reduce the number of design parameters that require heuristic tuning and other tricks involved, simplifying the network training, and enhancing the network's adaptability and scalability. Secondly, we employ a lightweight lane detection head that combines multi-scale high-resolution features and long-distance contextual dependencies to improve segmentation performance. Finally, we propose optimization improvements to optimize the training process without anchors and additional inference cost, allowing our multi-task learning network to achieve optimal performance through simple end-to-end training. Experimental results on the challenging BDD100K dataset demonstrate that YOLOPX achieves SOTA performance, outperforms previous anchor-based works while it remains easy to train. As a result, YOLOPX can meet the real-time and robust requirements of autonomous driving. Even under complex road conditions and limited computational resources, it can accurately detect and segment multiple traffic elements from images in real-time. In the future, we plan to extend YOLOPX's detection head to handle instance-level tasks, such as instance segmentation or keypoint detection. Overall, we hope that this work can help researchers and developers gain better insight in various autonomous driving application scenarios and inspire future work.

Declaration of competing interest

The authors declare that they have no known competing financial interests or personal relationships that could have appeared to influence the work reported in this paper.

Funding

This work was supported by National Key Research and Development Program of China [2022YFB3903801], Major Science and Technology Project of Hubei Province [2022AAA009], China Postdoctoral Science Foundation [2023TQ0248], Open Fund of Hubei Luojia Laboratory.

Data availability

The data used in this study is available at https://bdd-data.berkeley.edu/ upon request. The code that support the findings of this study is available at https://github.com/jiaoZ7688/YOLOPX.

References

[1] W. Shi, M.-B. Alawieh, X. Li, et al., Algorithm and hardware implementation for visual perception system in autonomous vehicle: A survey, Integration 59 (2017) 148–156.

[2] Y. Qian, J.M. Dolan, M. Yang, DLT-Net: Joint detection of drivable areas, lane lines, and traffic objects, IEEE Trans. Intell. Transp. Syst. 21 (11) (2019) 4670–4679.

[3] D. Wu, M.-W. Liao, W.-T. Zhang, et al., Yolop: You only look once for panoptic driving perception, Mach. Intell. Res. (2022) 1–13.

[4] D. Vu, B. Ngo, H. Phan, Hybridnets: End-to-end perception network, 2022, arXiv preprint arXiv:2203.09035.

[5] C. Han, Q. Zhao, S. Zhang, et al., YOLOPv2: Better, faster, stronger for panoptic driving perception, 2022, arXiv preprint arXiv:2208.11434.

[6] S. Ren, K. He, R. Girshick, et al., Faster r-cnn: Towards real-time object detection with region proposal networks, Adv. Neural Inf. Process. Syst. 28 (2015).

[7] Z. Tian, C. Shen, H. Chen, et al., Fcos: Fully convolutional one-stage object detection, in: Proceedings of the IEEE/CVF International Conference on Computer Vision, 2019, pp. 9627–9636.

[8] H. Zhao, J. Shi, X. Qi, et al., Pyramid scene parsing network, in: Proceedings of the IEEE Conference on Computer Vision and Pattern Recognition, 2017, pp. 2881–2890.

[9] L.-C. Chen, Y. Zhu, G. Papandreou, et al., Encoder-decoder with atrous separable convolution for semantic image segmentation, in: Proceedings of the European Conference on Computer Vision (ECCV), 2018, pp. 801–818.

[10] X. Pan, J. Shi, P. Luo, et al., Spatial as deep: Spatial cnn for traffic scene understanding, in: Proceedings of the AAAI Conference on Artificial Intelligence, Vol. 32, 2018.

[11] Y. Hou, Z. Ma, C. Liu, et al., Learning lightweight lane detection cnns by self attention distillation, in: Proceedings of the IEEE/CVF International Conference on Computer Vision, 2019, pp. 1013–1021.

[12] F. Yu, H. Chen, X. Wang, et al., Bdd100k: A diverse driving dataset for heterogeneous multitask learning, in: Proceedings of the IEEE/CVF Conference on Computer Vision and Pattern Recognition, 2020, pp. 2636–2645.

[13] T.-Y. Lin, P. Dollár, R. Girshick, et al., Feature pyramid networks for object detection, in: Proceedings of the IEEE Conference on Computer Vision and Pattern Recognition, 2017, pp. 2117–2125.

[14] S. Liu, L. Qi, H. Qin, et al., Path aggregation network for instance segmentation, in: Proceedings of the IEEE Conference on Computer Vision and Pattern Recognition, 2018, pp. 8759–8768.

[15] L. Tan, Y. Chen, J. Pang, et al., EfficientDet: Scalable and efficient object detection, IEEE Trans. Pattern Anal. Mach. Intell. (2020).

[16] Z. Ge, S. Liu, F. Wang, et al., Yolox: Exceeding yolo series in 2021, 2021, arXiv preprint arXiv:2107.08430.

[17] C.-Y. Wang, A. Bochkovskiy, H.-Y.M. Liao, YOLOv7: Trainable bag-of-freebies sets new state-of-the-art for real-time object detectors, 2022, arXiv preprint arXiv:2207.02696.

[18] E. Xie, P. Sun, X. Song, et al., Polarmask: Single shot instance segmentation with polar representation, in: Proceedings of the IEEE/CVF Conference on Computer Vision and Pattern Recognition, 2020, pp. 12193–12202.

[19] X. Zhou, J. Zhou, P. Krahenbuhl, Bottom-up object detection by grouping extreme and center points, in: Proceedings of the IEEE/CVF Conference on Computer Vision and Pattern Recognition, 2019, pp. 850–859.

[20] H. Liu, F. Liu, X. Fan, et al., Polarized self-attention: Towards high-quality pixel-wise regression, 2021, arXiv preprint arXiv:2107.00782.

[21] M. Hu, J. Feng, J. Hua, et al., Online convolutional re-parameterization, in: Proceedings of the IEEE/CVF Conference on Computer Vision and Pattern Recognition, 2022, pp. 568–577.

[22] X. Zhou, D. Wang, P. Krähenbühl, Objects as points, 2019, arXiv preprint arXiv:1904.07850.

[23] Q. Wang, J. Chne, J. Deng, et al., 3D-CenterNet: 3D object detection network for point clouds with center estimation priority, Pattern Recognit. 107884 (2021) 115.

[24] S. Gao, F. Zeng, L. Cheng, et al., Fashion image search via anchor-free detector, in: Proceedings of the 2022 International Conference on Multimedia Retrieval, 2022, pp. 416–425.

[25] G. Cheng, X. Yuan, X. Yao, et al., Towards large-scale small object detection: Survey and benchmarks, IEEE Trans. Pattern Anal. Mach. Intell. (2023).

[26] H. Zhang, M. Li, D. Miao, et al., Construction of a feature enhancement network for small object detection, Pattern Recognit. 143 (2023) 109801.

[27] C. Deng, M. Wang, L. Liu, et al., Extended feature pyramid network for small object detection, IEEE Trans. Multimed. 1968–1979 (2021) 24.

[28] N. Carion, F. Massz, G. Synnaeve, et al., End-to-end object detection with transformers, in: European Conference on Computer Vision, Springer International Publishing, Cham, 2020, pp. 213–229.

[29] X. Zhu, W. Su, L. Lu, et al., Deformable DETR: Deformable transformers for end-to-end object detection, in: International Conference on Learning Representations, 2020.

[30] X. Wang, R. Girshick, A. Gupta, et al., Non-local neural networks, in: Proceedings of the IEEE Conference on Computer Vision and Pattern Recognition, 2018, pp. 7794–7803.

[31] S. Zheng, J. Lu, H. Zhao, et al., Rethinking semantic segmentation from a sequence-to-sequence perspective with transform-ers, in: Proceedings of the IEEE/CVF Conference on Computer Vision and Pattern Recognition, 2021, pp. 6881–6890.

[32] J. Tang, S. Li, P. Liu, et al., A review of lane detection methods based on deep learning, Pattern Recognit. 107623 (2021) 111.

[33] K. He, G. Gkioxari, P. Dollár, et al., Mask r-cnn, in: Proceedings of the IEEE International Conference on Computer Vision, 2017, pp. 2961–2969.

[34] K. He, X. Zhang, S. Ren, et al., Deep residual learning for image recognition, in: Proceedings of the IEEE Conference on Computer Vision and Pattern Recognition, 2016, pp. 770–778.

[35] M. Tan, Q. Le, Efficientnet: Rethinking model scaling for convolutional neural networks, in: International Conference on Machine Learning, PMLR, 2019, pp. 6105–6114.

[36] C.-Y. Wang, A. Bochkovskiy, H.-Y.M. Liao, Scaled-yolov4: Scaling cross stage partial network, in: Proceedings of the IEEE/Cvf Conference on Computer Vision and Pattern Recognition, 2021, pp. 13029–13038.

[37] K. Han, Y. Wang, Q. Tian, et al., Ghostnet: More features from cheap operations, in: Proceedings of the IEEE/CVF Conference on Computer Vision and Pattern Recognition, 2020, pp. 1580–1589.

[38] F. Zeng, M. Zhao, Z. Zhang, et al., Joint clothes detection and attribution prediction via anchor-free framework with decoupled representation transformer, in: Proceedings of the 31st ACM International Conference on Information & Knowledge Management, 2022, pp. 2444–2454.

[39] Z. Li, W. Wang, E. Xie, et al., Panoptic segformer: Delving deeper into panoptic segmentation with transformers, in: Proceedings of the IEEE/CVF Conference on Computer Vision and Pattern Recognition, 2022, pp. 1280–1289.

[40] A. Buslaev, V.I. Iglovikov, E. Khvedchenya, et al., Albumentations: fast and flexible image augmentations, Information 11 (2) (2020) 125.

[41] Z. Zhang, T. He, H. Zhang, et al., Bag of freebies for training object detection neural networks, 2019, arXiv preprint arXiv:1902.04103.

[42] H. Zhang, M. Cisse, Y.N. Dauphin, et al., Mixup: Beyond empirical risk minimization, 2017, arXiv preprint arXiv:1710.09412.

[43] T.-Y. Lin, P. Goyal, R. Girshick, et al., Focal loss for dense object detection, in: Proceedings of the IEEE International Conference on Computer Vision, 2017, pp. 2980–2988.

[44] S.S.M. Salehi, D. Erdogmus, A. Gholipour, Tversky loss function for image segmentation using 3D fully convolutional deep networks, in: Machine Learning in Medical Imaging: 8th International Workshop, MLMI 2017, Held in Conjunction with MICCAI 2017, Quebec City, QC, Canada, September 10, 2017, Proceedings 8, Springer, 2017, pp. 379–387.

[45] A. Paszke, S. Gross, F. Massa, et al., Pytorch: An imperative style, high-performance deep learning library, Adv. Neural Inf. Process. Syst. 32 (2019).

[46] I. Loshchilov, F. Hutter, Decoupled weight decay regularization, 2017, arXiv preprint arXiv:1711.05101.

[47] M. Teichmann, M. Weber, M. Zoellner, et al., Multinet: Real-time joint semantic reasoning for autonomous driving, in: 2018 IEEE Intelligent Vehicles Symposium (IV), IEEE, 2018, pp. 1013–1020.

[48] A. Paszke, A. Chaurasia, S. Kim, et al., Enet: A deep neural network architecture for real-time semantic segmentation, 2016, arXiv preprint arXiv:1606.02147.

[49] Y. Hou, Z. Ma, C. Liu, et al., Learning lightweight lane detection cnns by self attention distillation, in: Proceedings of the IEEE/CVF International Conference on Computer Vision, 2019, pp. 1013–1021.

Jiao Zhan received the B.S. degree in Geophysics from China University of Petroleum (East China), Qingdao, China, in 2016 and the M.E. degree in Geomatics Engineering from Wuhan University, Wuhan, China, in 2018. He is currently working toward the Ph.D. degree in Geodesy and Survey Engineering with the Research Center of GNSS, Wuhan University, Wuhan, China. His research interests include Compute Vision, High-precision Map and Autonomous Driving.

Yarong Luo received a B.Eng. degree in space science and technology from Xidian University, Xi'an, China, in 2016. He is currently pursuing a Ph.D. degree in the GNSS Research Center, Wuhan University, Wuhan, China. His area of interests includes nonlinear geometric fltering, robust geometric perception, data fusion and GNSS/INS integration for vehicle navigation.

Chi Guo received the Ph.D. degree s in computer science from Wuhan University, Hubei province, China. Currently, he is a professor at the national satellite positioning system engineering technology research center of Wuhan University. His current research interests include Beidou application, unmanned system navigation and location based services (LBS).

Yejun Wu received a B.Eng. degree in computer science from Wuhan University, Hubei province, China, in 2020. He is currently working toward the Ph.D. degree in School of Computer Science, Wuhan University, Wuhan, China. His research interests include machine learning and computer vision.

Jiawei Meng is currently working toward the Bachelor degree in School of Geodesy and Geomatics, Wuhan University, Wuhan, China. His major is Navigation Engineering His research interests include machine learning and computer vision.

Jingnan Liu is the Academician of Chinese Academy of Engineering, and the professor at the GNSS Research Center, Wuhan University, Wuhan, China. He majors in satellite geodetic theories, methods and data processing, satellite navigation methods, data processing and applications.