上海科技大学
ShanghaiTech University

CS240 Algorithm Design and Analysis

Lecture 19

Amortized Analysis (Cont.)

Quan Li
Fall 2025
2025.11.27

Three Methods of Amortized Analysis

Aggregate analysis:

- Total cost of n operations / n

Accounting method:

- Assign each type of operation a (possibly different) amortized cost
- Overcharge some operations
- Store the overcharge as credit on specific objects
- Then use the credit for compensation for some later operations

Potential method:

- Same as accounting method
- But store the credit as “potential energy” as a whole

Fibonacci Heaps

A classical example where different types of operations have different amortized costs

Fibonacci Heaps

- A Fibonacci heap is a type of heap that implements certain operations faster than a binary heap, in amortized time.
  - The time complexities of the circled operations are amortized. The rest are worst case.
- It can be used to speed up a number of graph algorithms asymptotically.
- Both Dijkstra's and Prim's algorithms take O((V+E) log V) time with a binary heap, and O(E + V log V) time with a Fibonacci heap.
  - Both algorithms decrease the key value heap items O(E) times.
  - This takes O(E log V) time on a binary heap, and O(E) time on a Fibonacci heap.
- Fibonacci heaps are more complicated than binary heaps, and often don't perform better in practice.

Procedure	Binary heap (worst-case)	Fibonacci heap (amortized)
MAKE-HEAP	$\Theta(1)$	$\Theta(1)$
INSERT	$\Theta(\lg n)$	$\Theta(1)$
MINIMUM	$\Theta(1)$	$\Theta(1)$
EXTRACT-MIN	$\Theta(\lg n)$	$O(\lg n)$
UNION	$\Theta(n)$	$\Theta(1)$
DECREASE-KEY	$\Theta(\lg n)$	$\Theta(1)$
DELETE	$\Theta(\lg n)$	$O(\lg n)$

```
DIJKSTRA(G, w, s)
INITIALIZE-SINGLE-SOURCE(G, s)
S = ∅
Q = G.V
while Q ≠ ∅
    u = EXTRACT-MIN(Q)
    S = S ∪ {u}
    for each vertex v ∈ G.Adj[u]
        RELAX(u, v, w)
```

```
RELAX(u, v, w)
if v.d > u.d + w(u, v)
    v.d = u.d + w(u, v)
    v.π = u
```

```
MST-PRIM(G, w, r)
for each u ∈ G.V
    u.key = ∞
    u.π = NIL
r.key = 0
Q = G.V
while Q ≠ ∅
    u = EXTRACT-MIN(Q)
    for each v ∈ G.Adj[u]
        if v ∈ Q and w(u, v) < v.key
            v.π = u
            v.key = w(u, v)
```

Fibonacci Heaps: Structure

each parent smaller than its children

Fibonacci heap.

- A forest of heap-ordered trees; Each tree satisfies the min heap property, i.e., each node's key is less than those of all its children; store the roots in a list.
- Maintain pointer to minimum element.
- Set of marked nodes.

Each node stores an up pointer to its parent,
a "down" pointer to one of its children.
Siblings are stored in a doubly linked list

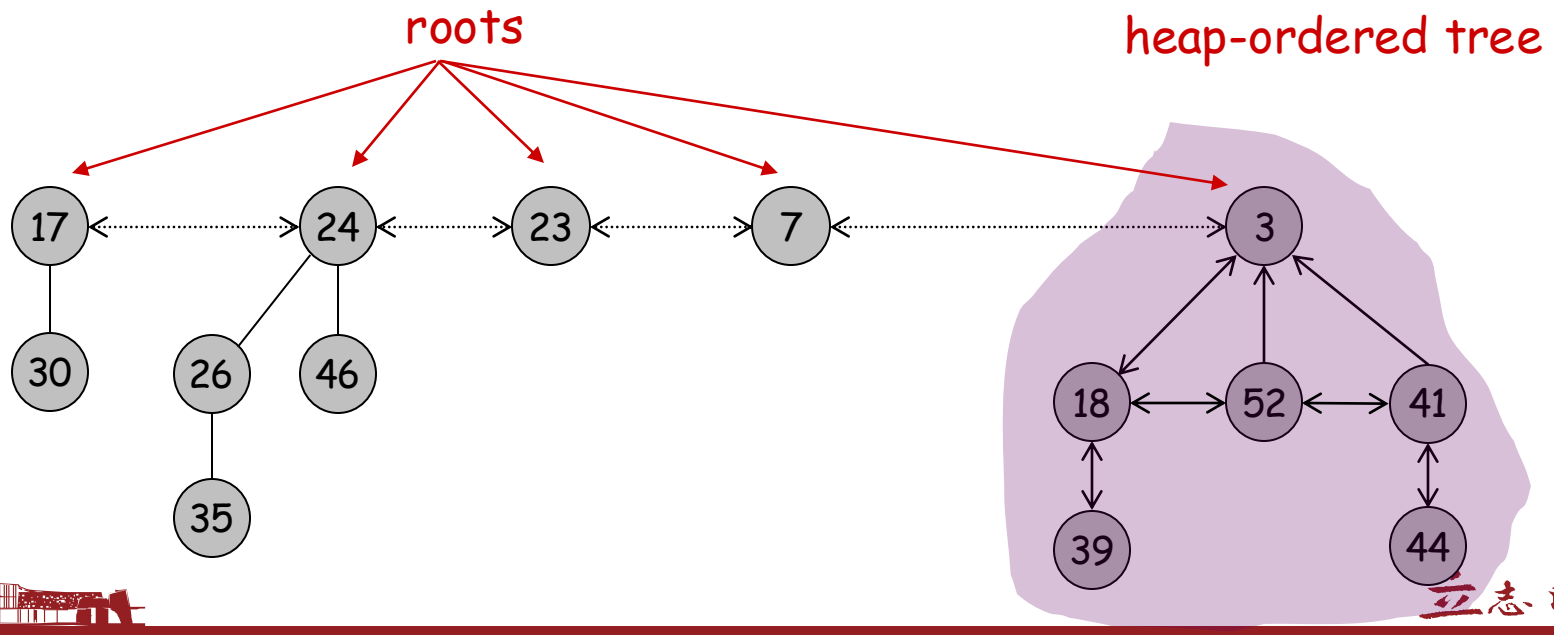

Fibonacci Heaps: Structure

Fibonacci heap.

- A forest of heap-ordered trees; Each tree satisfies the min heap property, i.e., each node's key is less than those of all its children; store the roots in a list.
- Maintain pointer to minimum element.
- Set of marked nodes.

find-min takes O(1) time

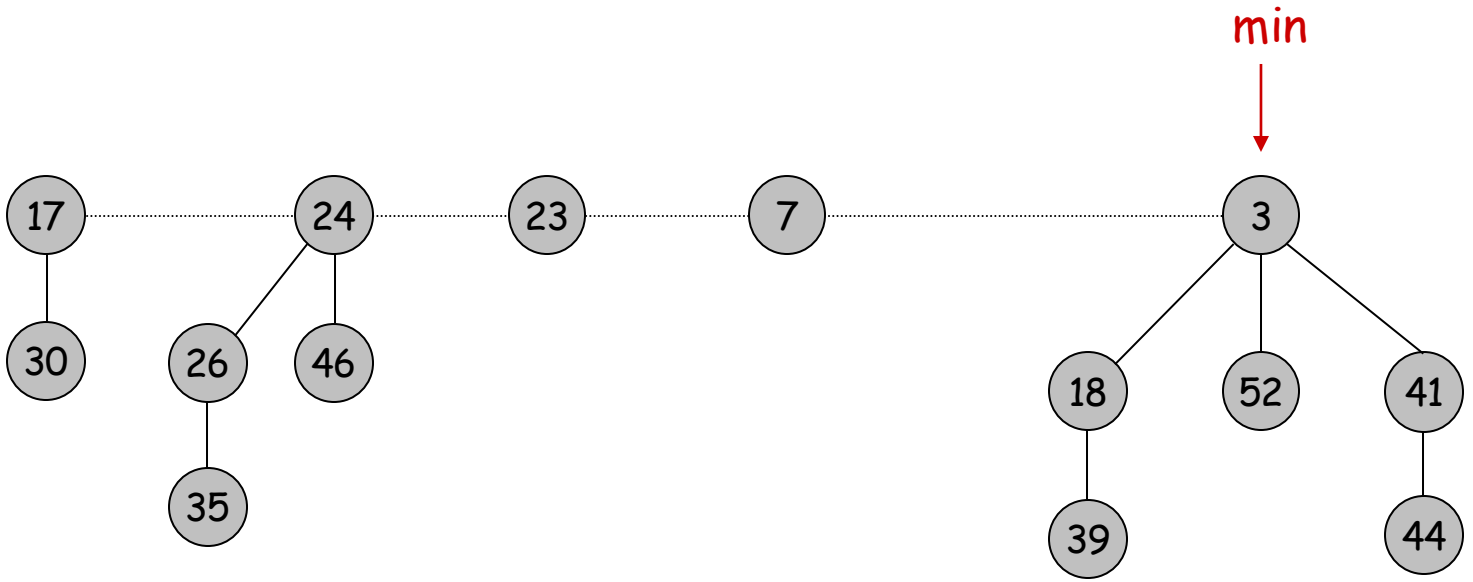

Heap H

Fibonacci Heaps: Structure

Fibonacci heap.

- A forest of heap-ordered trees; Each tree satisfies the min heap property, i.e., each node's key is less than those of all its children; store the roots in a list.
- Maintain pointer to minimum element.
- Set of marked nodes.

used to bound maximum degree (will explain later);
roots are never marked

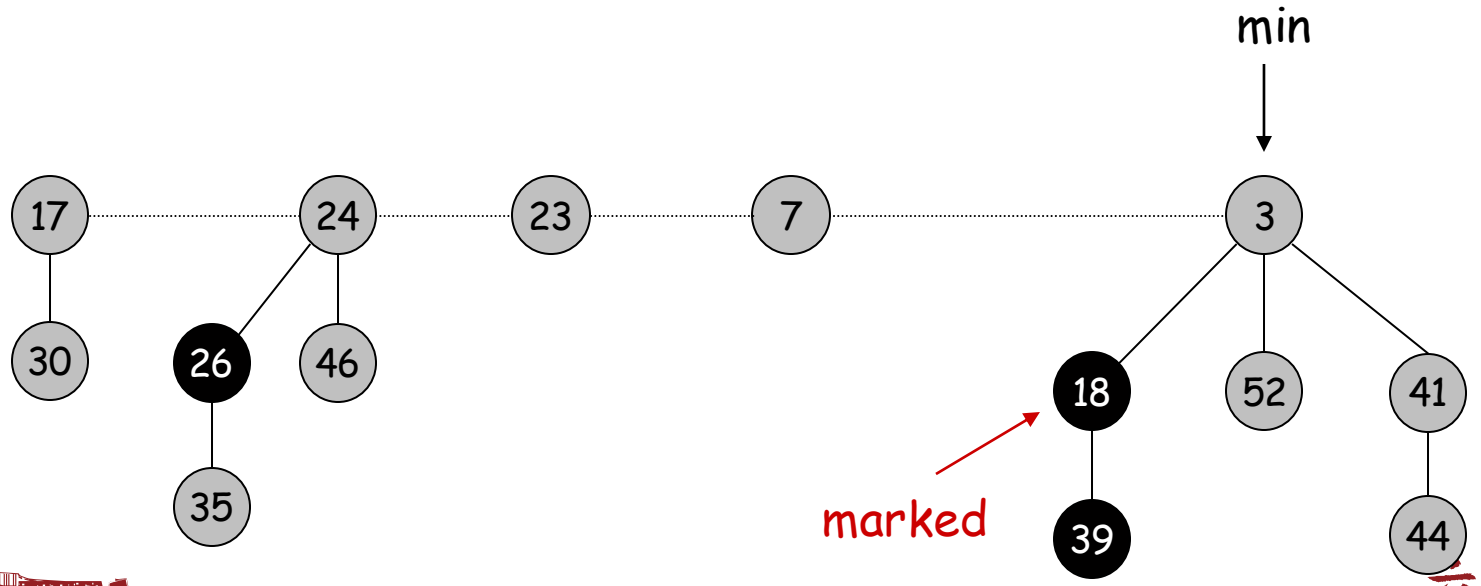

Heap H

Fibonacci Heaps: Notation

Notation.

- n = number of nodes in heap.
- d(x) = number of children of node x (degree).
- D(n) = max degree of any node in a heap of size n.
  Will guarantee D(n) = O(log n)
- trees(H) = number of trees in heap H.
- marks(H) = number of marked nodes in heap H.

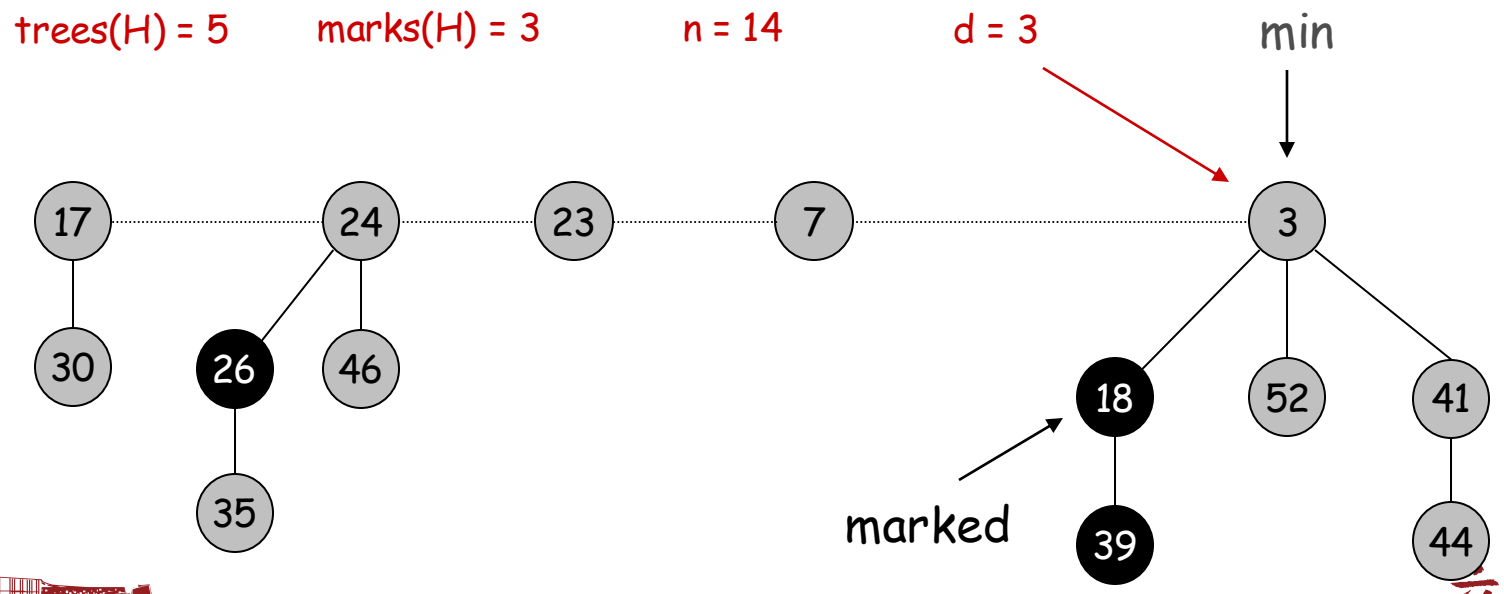

Fibonacci Heaps: Potential Function

may be scaled up by some constant sufficiently large

$$\Phi(H) = \text{trees}(H) + 2 \cdot \text{marks}(H)$$

potential of heap H

trees(H) = 5 marks(H) = 3 $\Phi(H) = 5 + 2 \cdot 3 = 11$

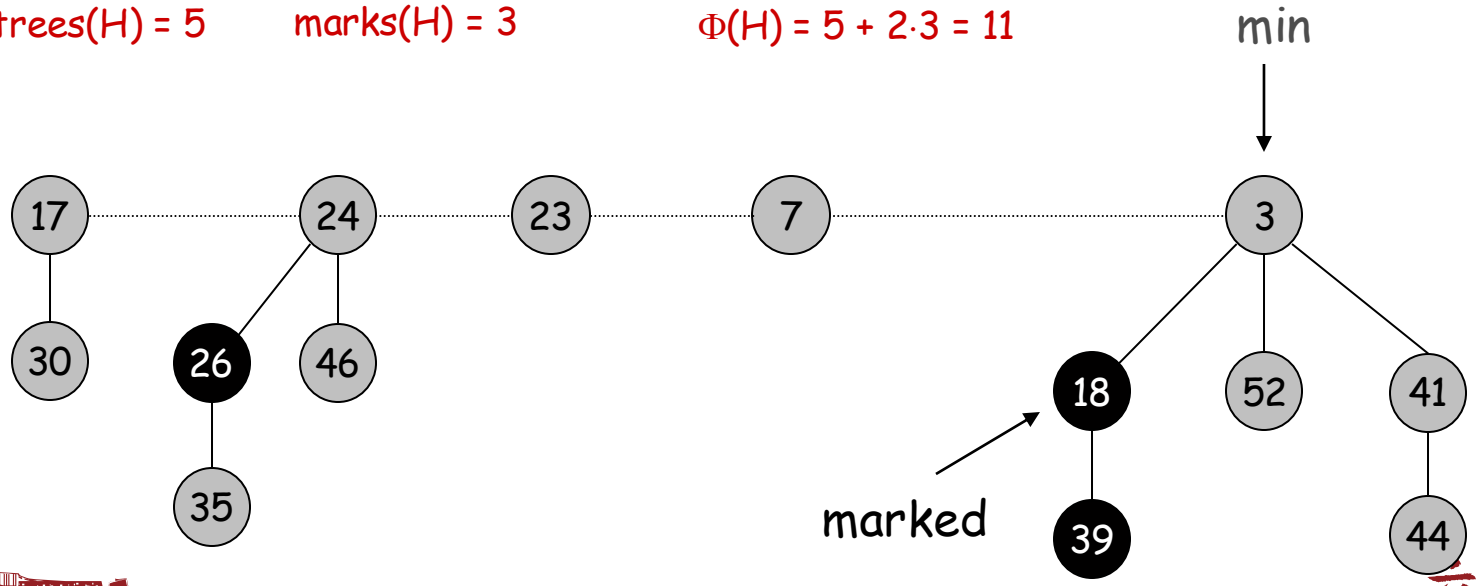

Basic Operations

Let H and H' denote the heap before and after an operation.

- Make-Heap
  - Make an empty heap. Set H'.n=0, H'.min=NIL
  - Cost = O(1)
  - Amortized cost = O(1), since $\Phi(H) = \Phi(H') = 0$

- Find the minimum
  - Return H.min
  - Cost = amortized cost = O(1)

Fibonacci Heaps: Insert

Insert.

- Create a new singleton tree.
- Add to root list; update min pointer (if necessary).

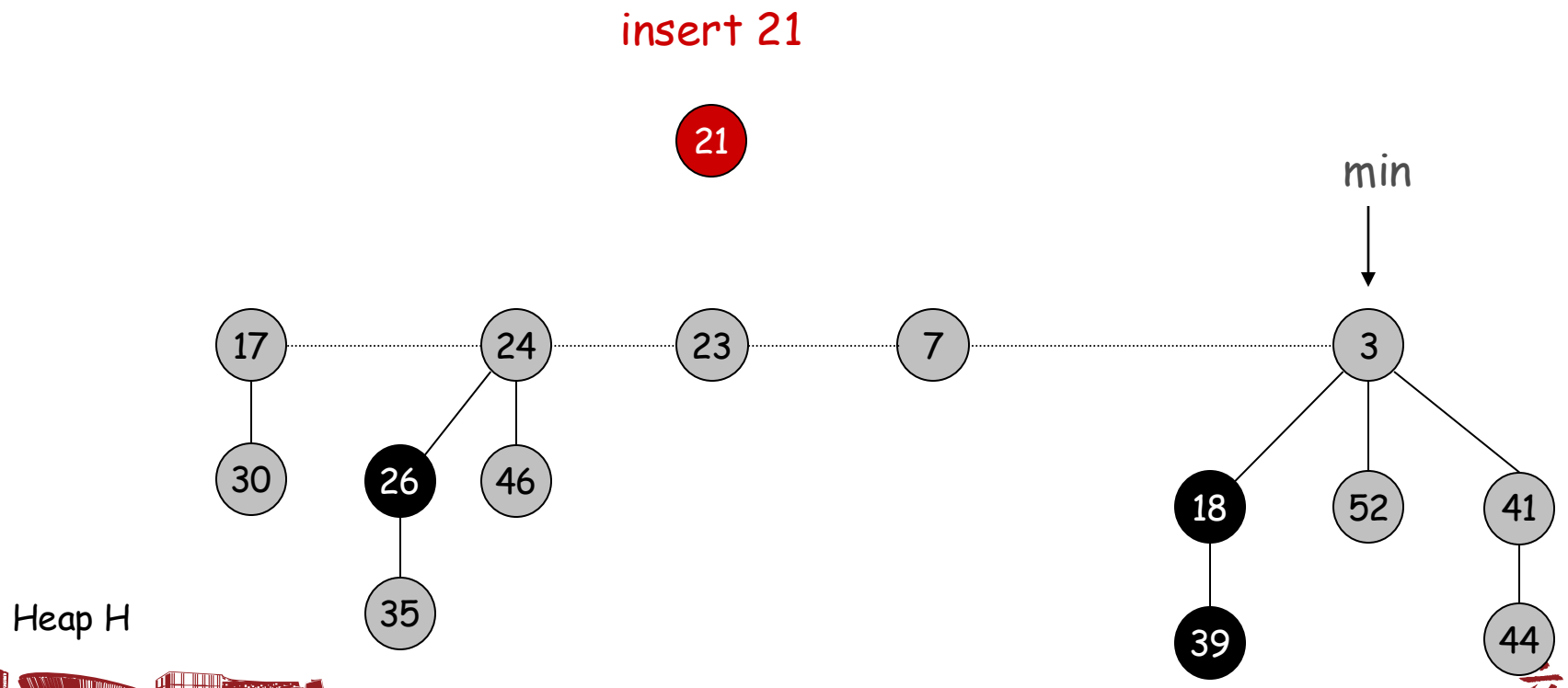

Fibonacci Heaps: Insert

Insert.

- Create a new singleton tree.
- Add to root list; update min pointer (if necessary).

insert 21

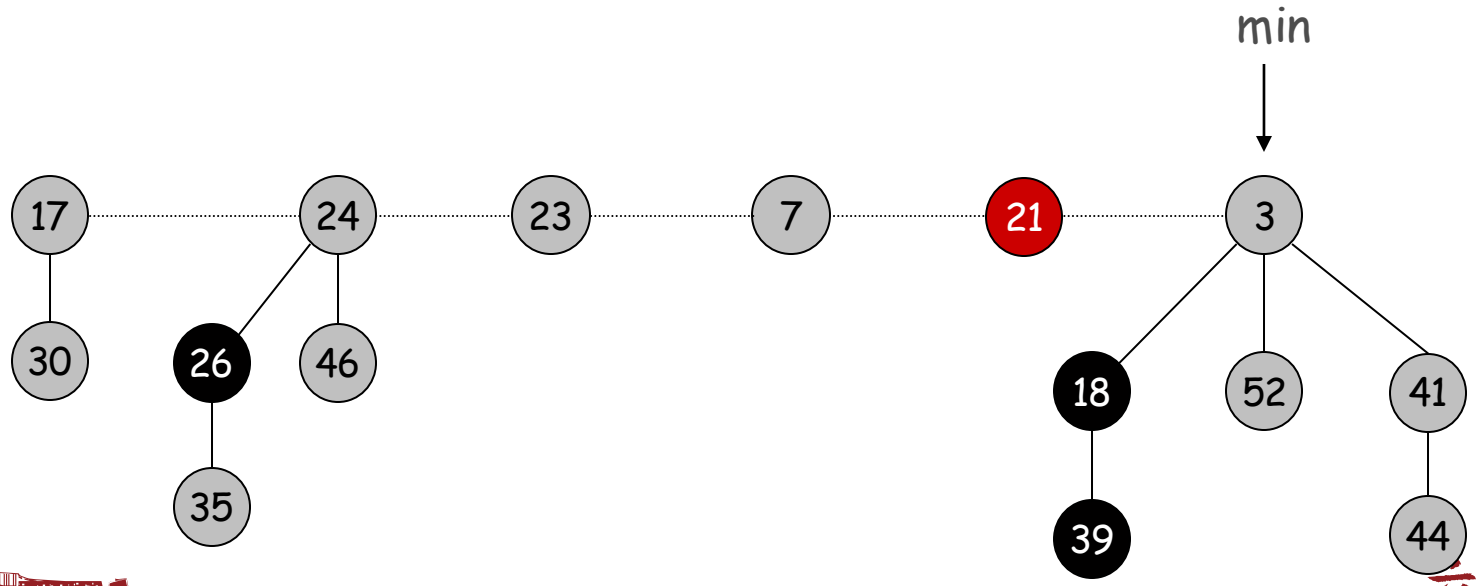

Heap H

Fibonacci Heaps: Insert Analysis

Insert a node

- Add the new node to the root list, left of the min node.
- Change H.min if new node's key is smaller.
- Cost = O(1).
- Amortized cost = O(1).
  - Number of roots increases by 1.
  - So $\Phi(H') - \Phi(H) = \big(t(H) + 1 + 2m(H)\big) - \big(t(H) + 2m(H)\big) = O(1)$.

$\Phi(H) = \text{trees}(H) + 2 \cdot \text{marks}(H)$

potential of heap H

Actual cost. O(1)

Change in potential. +1

Amortized cost. O(1)

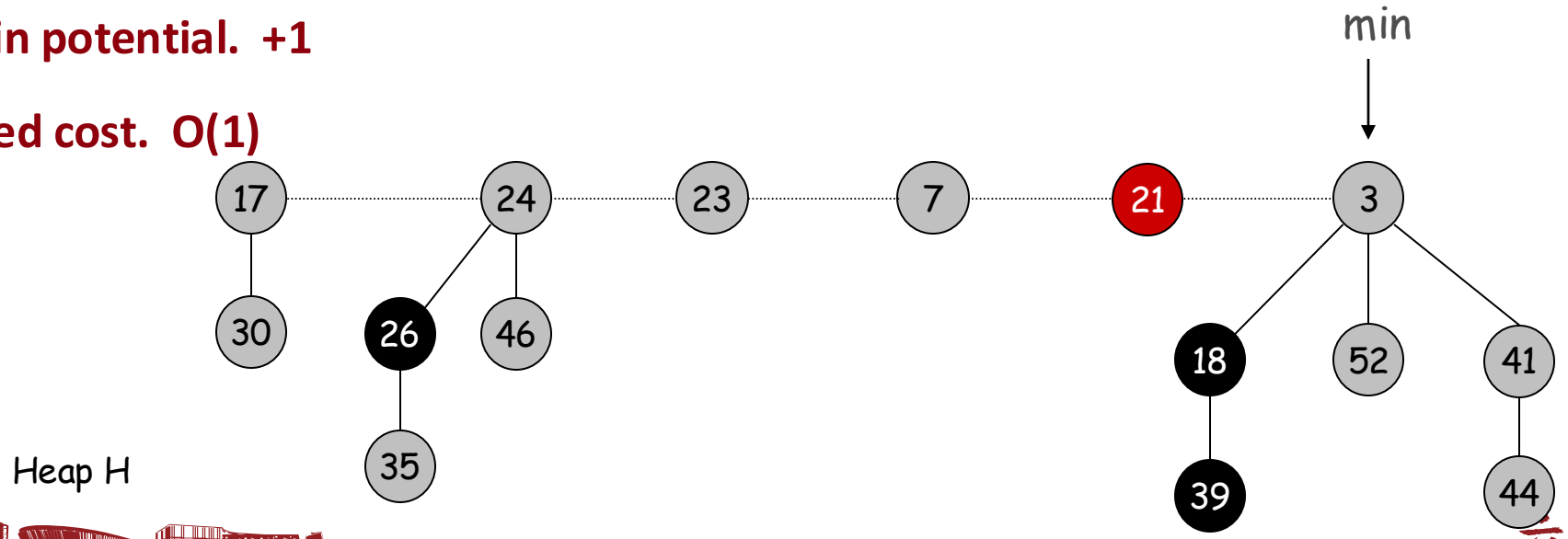

Linking Operation

Linking operation. Make larger root a child of smaller root.

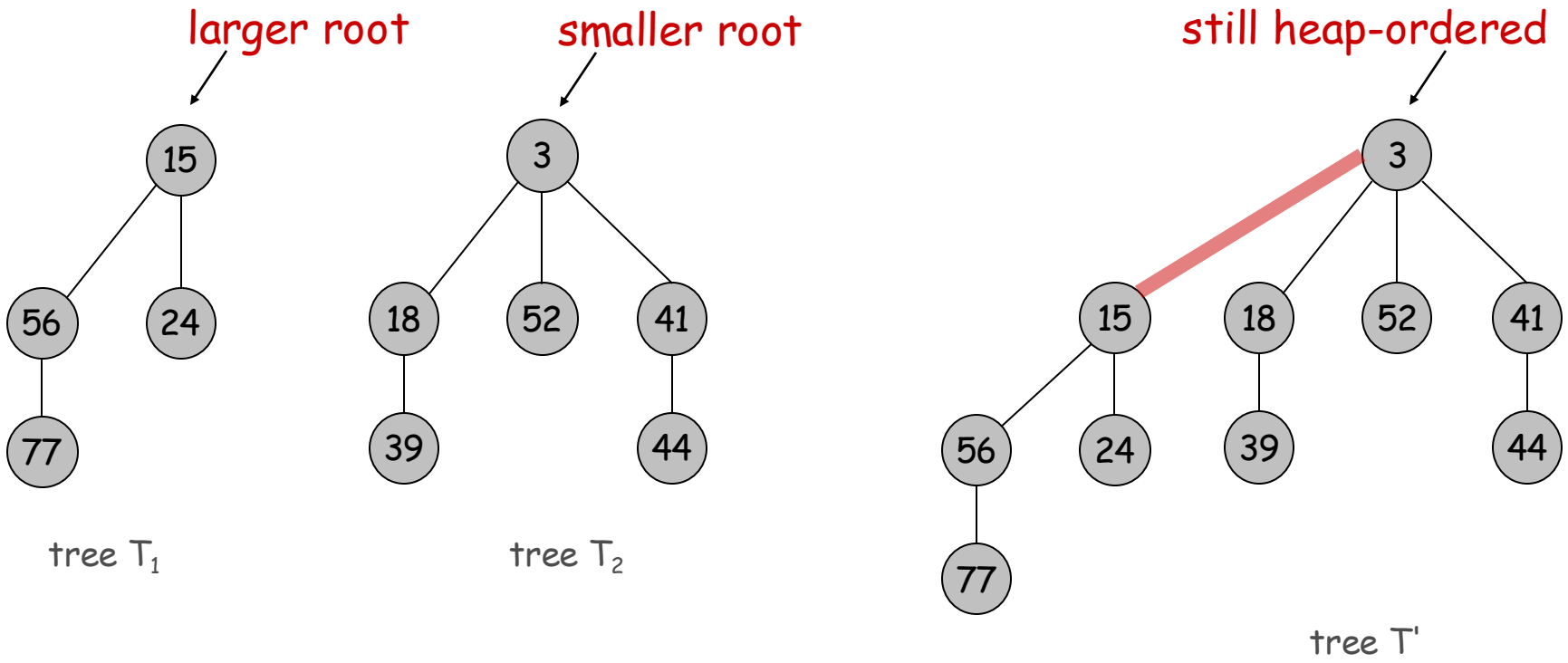

Fibonacci Heaps: Delete Min

Delete min.

- Delete min; meld its children into root list; set unmarked; update min.
- Consolidate trees so that no two roots have same degree.

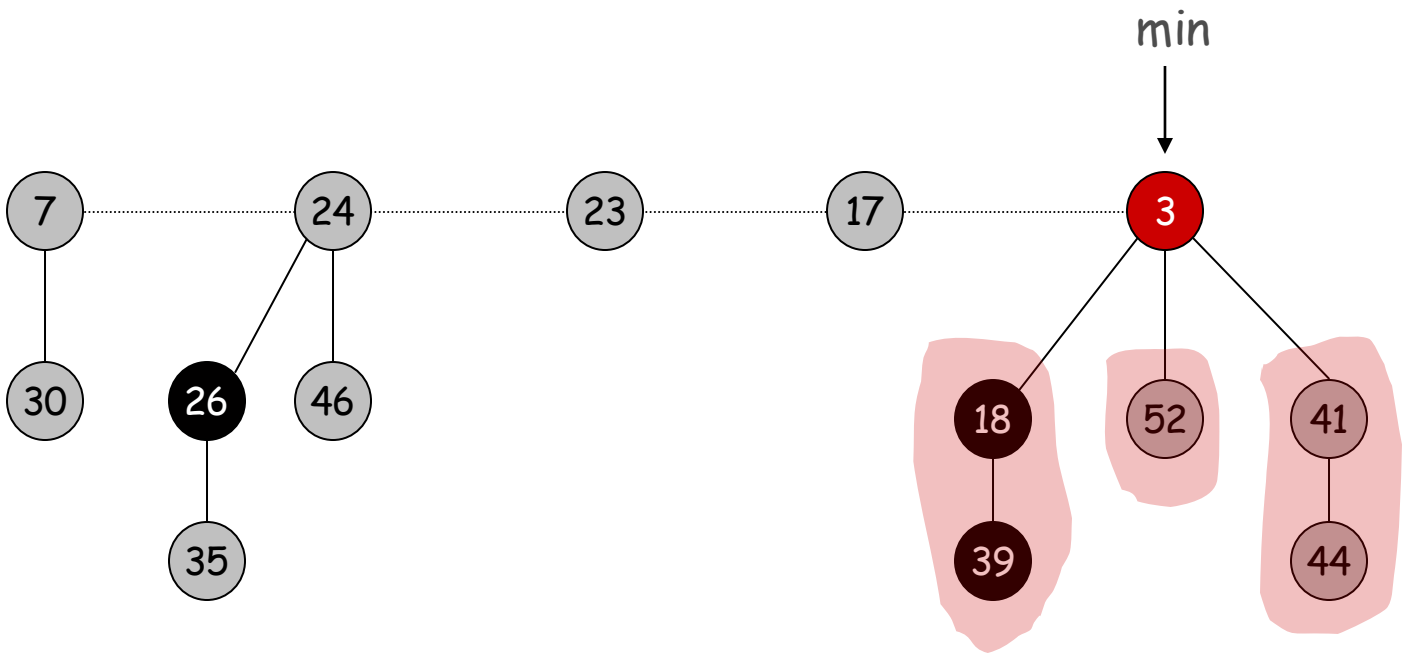

Fibonacci Heaps: Delete Min

Delete min.

- Delete min; meld its children into root list; set unmarked; update min.
- Consolidate trees so that no two roots have same degree.

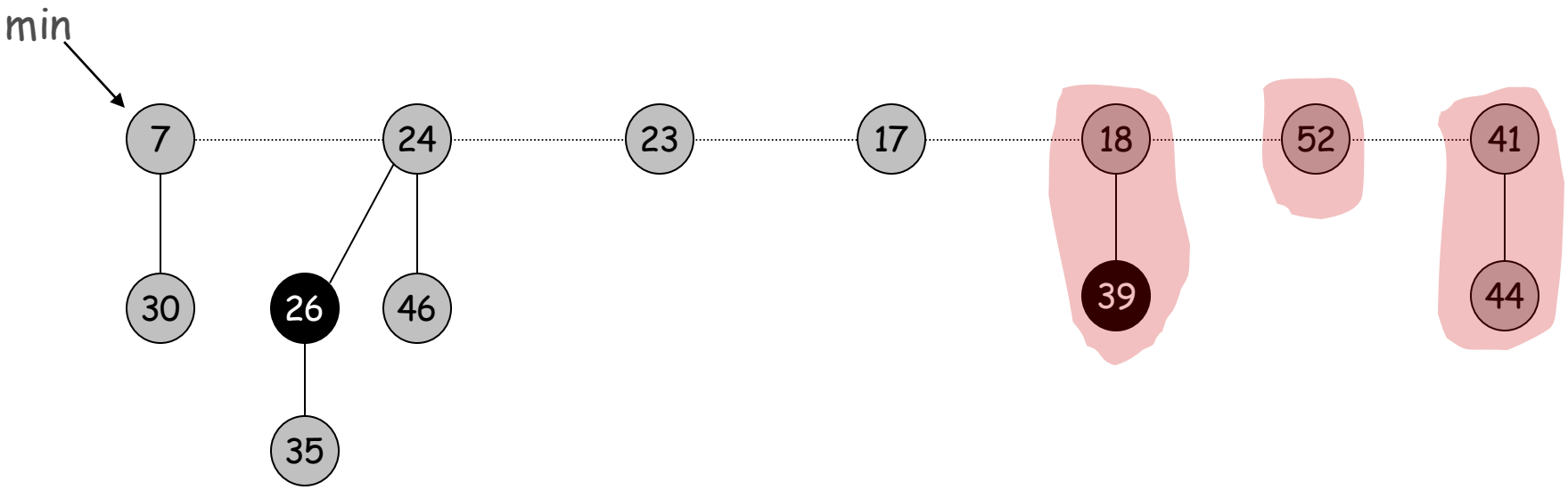

Fibonacci Heaps: Delete Min

Delete min.

- Delete min; meld its children into root list; set unmarked; update min.
- Consolidate trees so that no two roots have same degree.

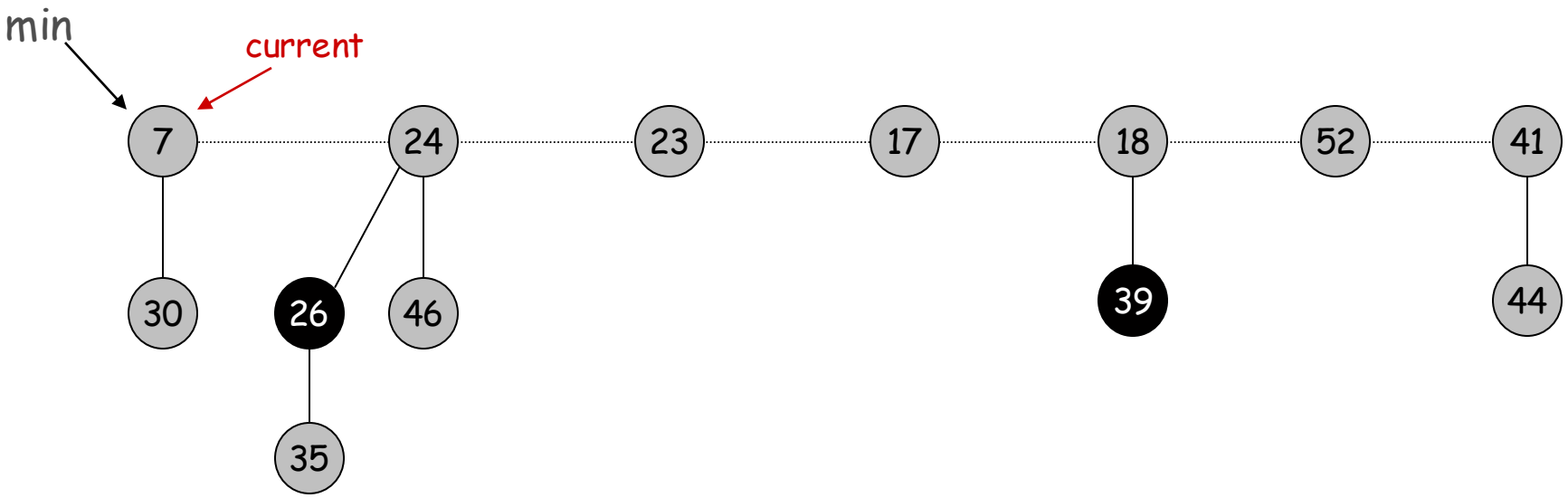

Fibonacci Heaps: Delete Min

Delete min.

- Delete min; meld its children into root list; set unmarked; update min.
- Consolidate trees so that no two roots have same degree.

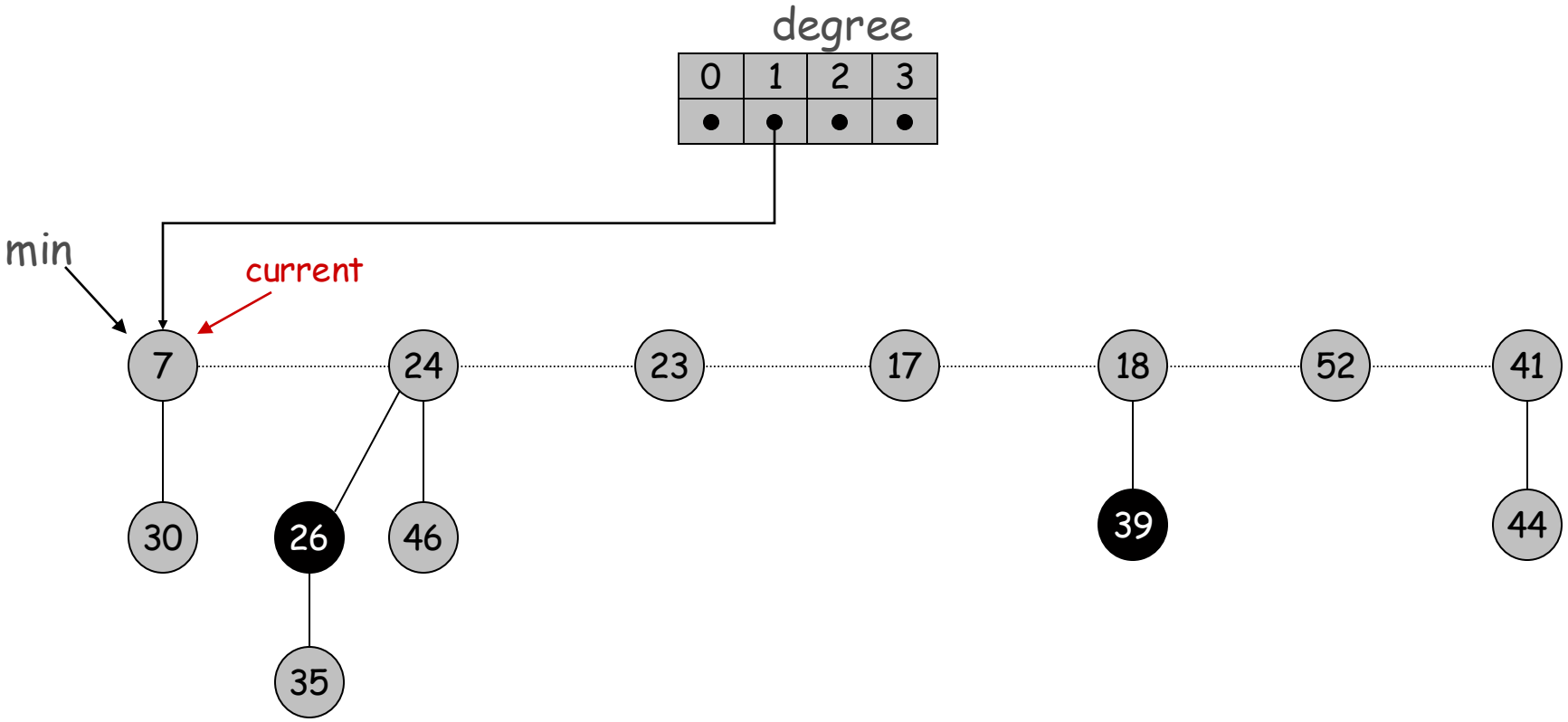

Fibonacci Heaps: Delete Min

Delete min.

- Delete min; meld its children into root list; set unmarked; update min.
- Consolidate trees so that no two roots have same degree.

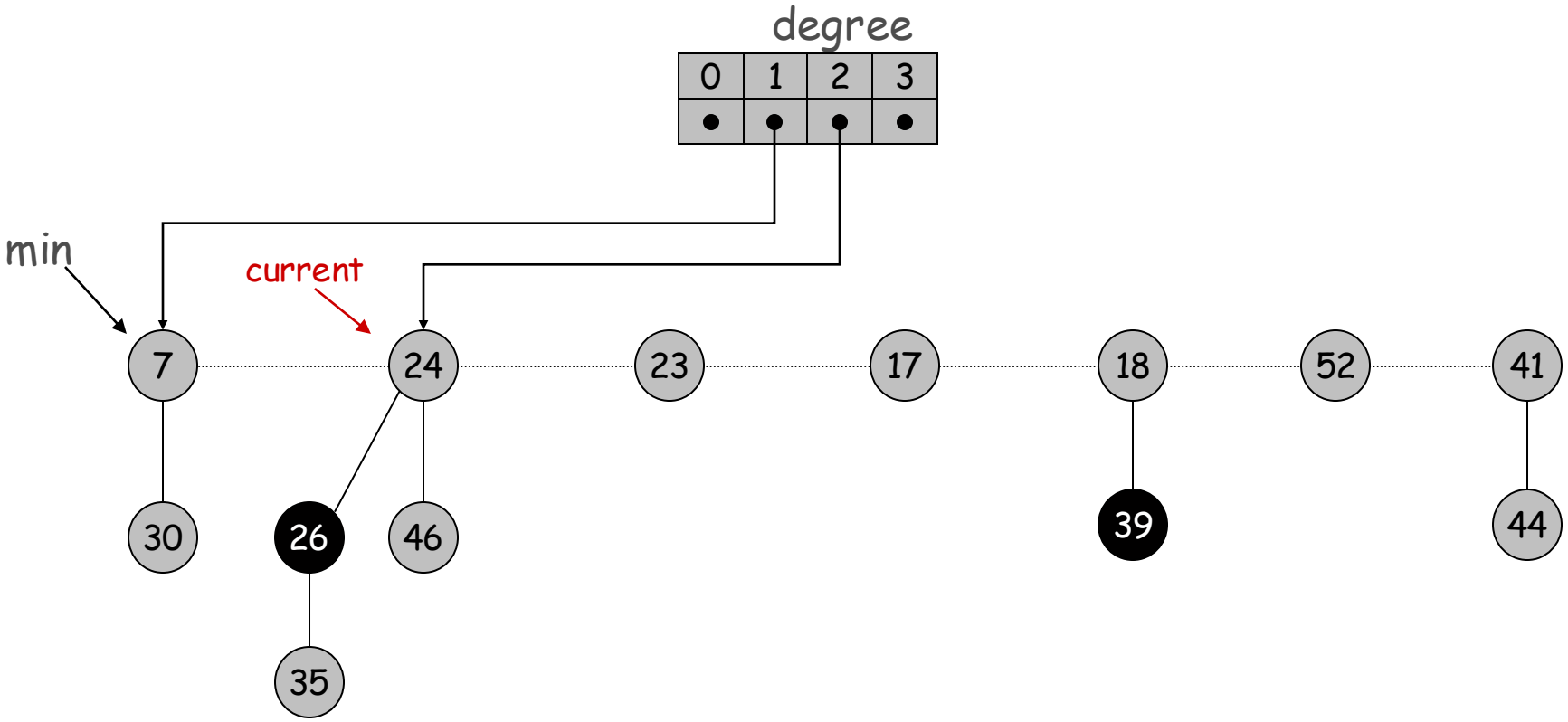

Fibonacci Heaps: Delete Min

Delete min.

- Delete min; meld its children into root list; set unmarked; update min.
- Consolidate trees so that no two roots have same degree.

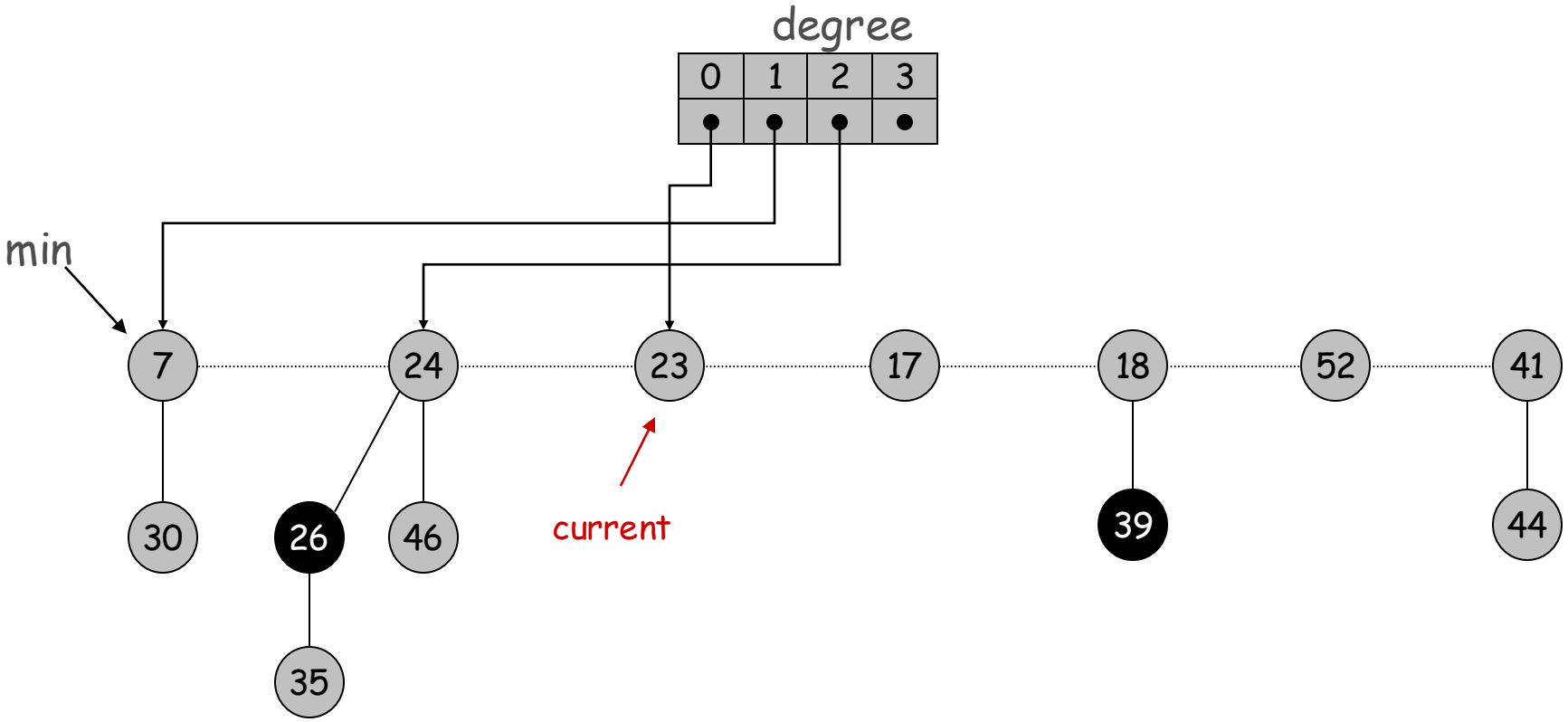

Fibonacci Heaps: Delete Min

Delete min.

- Delete min; meld its children into root list; set unmarked; update min.
- Consolidate trees so that no two roots have same degree.

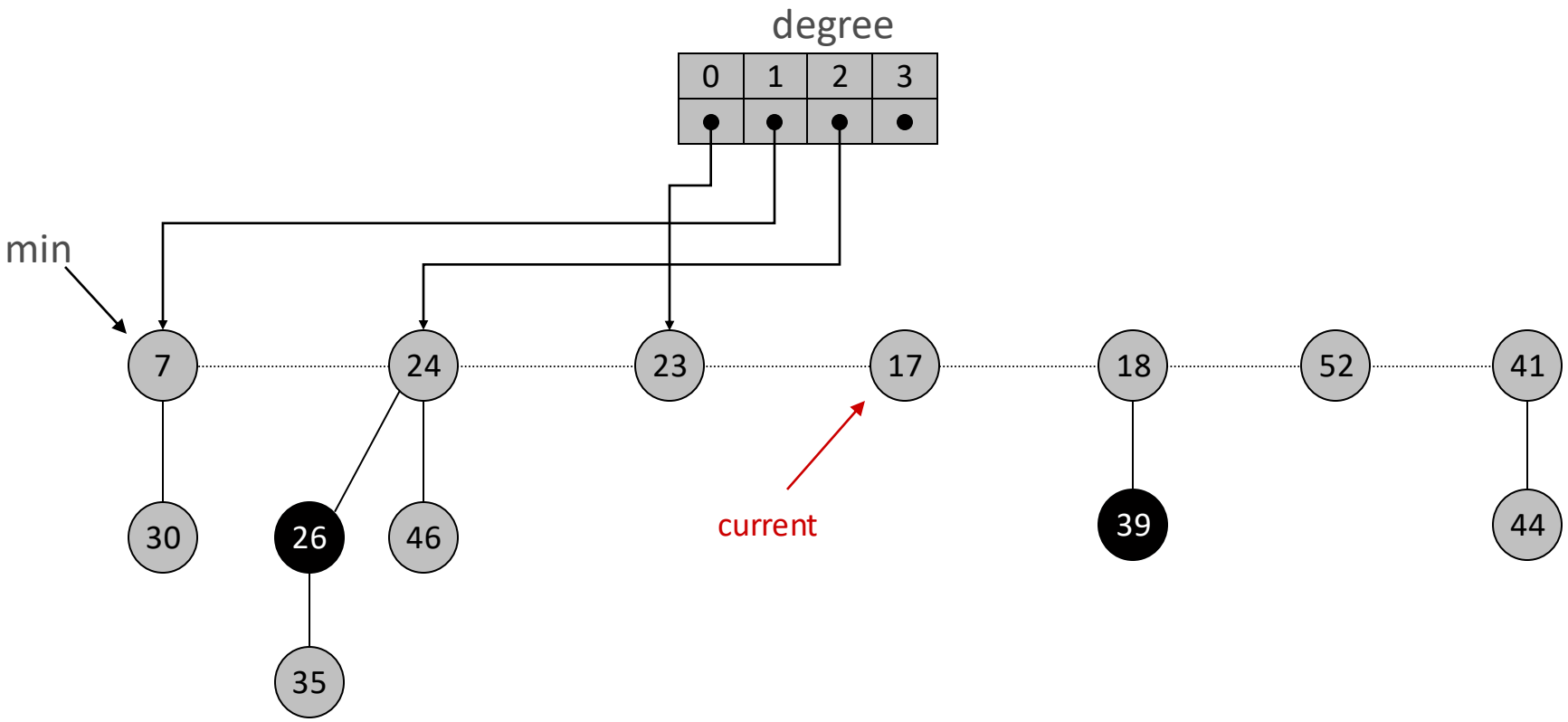

link 23 into 17

Fibonacci Heaps: Delete Min

Delete min.

- Delete min; meld its children into root list; set unmarked; update min.
- Consolidate trees so that no two roots have same degree.

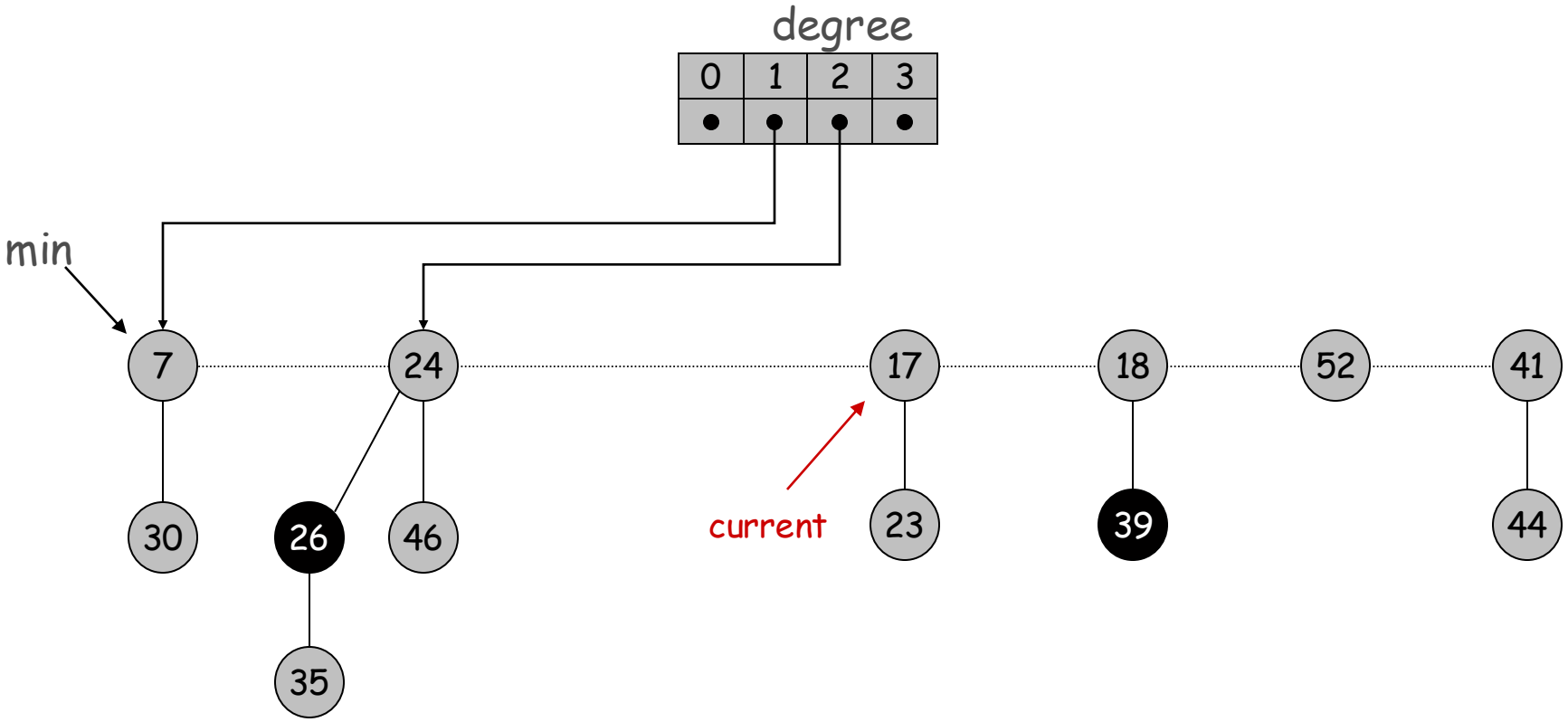

link 17 into 7

Fibonacci Heaps: Delete Min

Delete min.

- Delete min; meld its children into root list; set unmarked; update min.
- Consolidate trees so that no two roots have same degree.

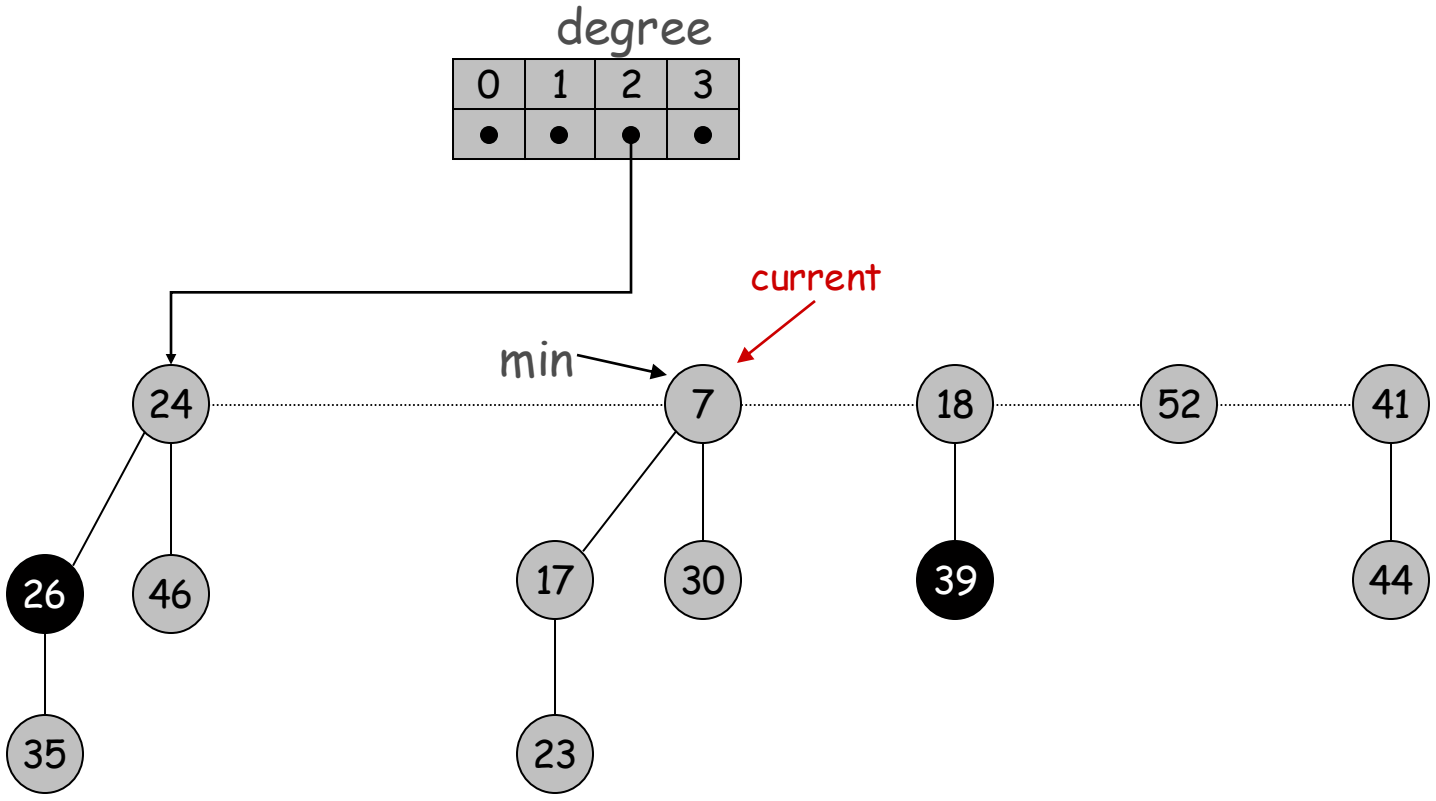

link 24 into 7

Fibonacci Heaps: Delete Min

Delete min.

- Delete min; meld its children into root list; set unmarked; update min.
- Consolidate trees so that no two roots have same degree.

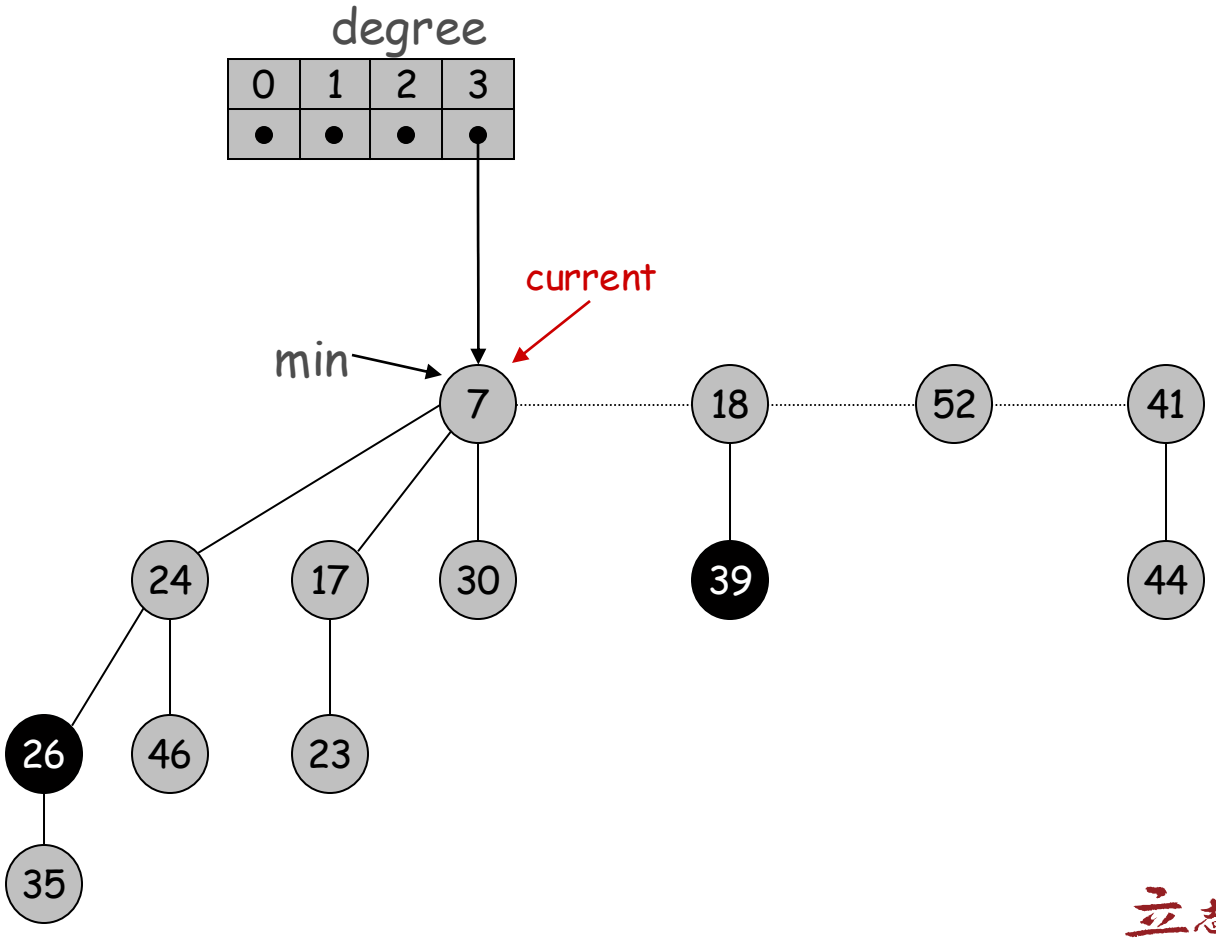

Fibonacci Heaps: Delete Min

Delete min.

- Delete min; meld its children into root list; set unmarked; update min.
- Consolidate trees so that no two roots have same degree.

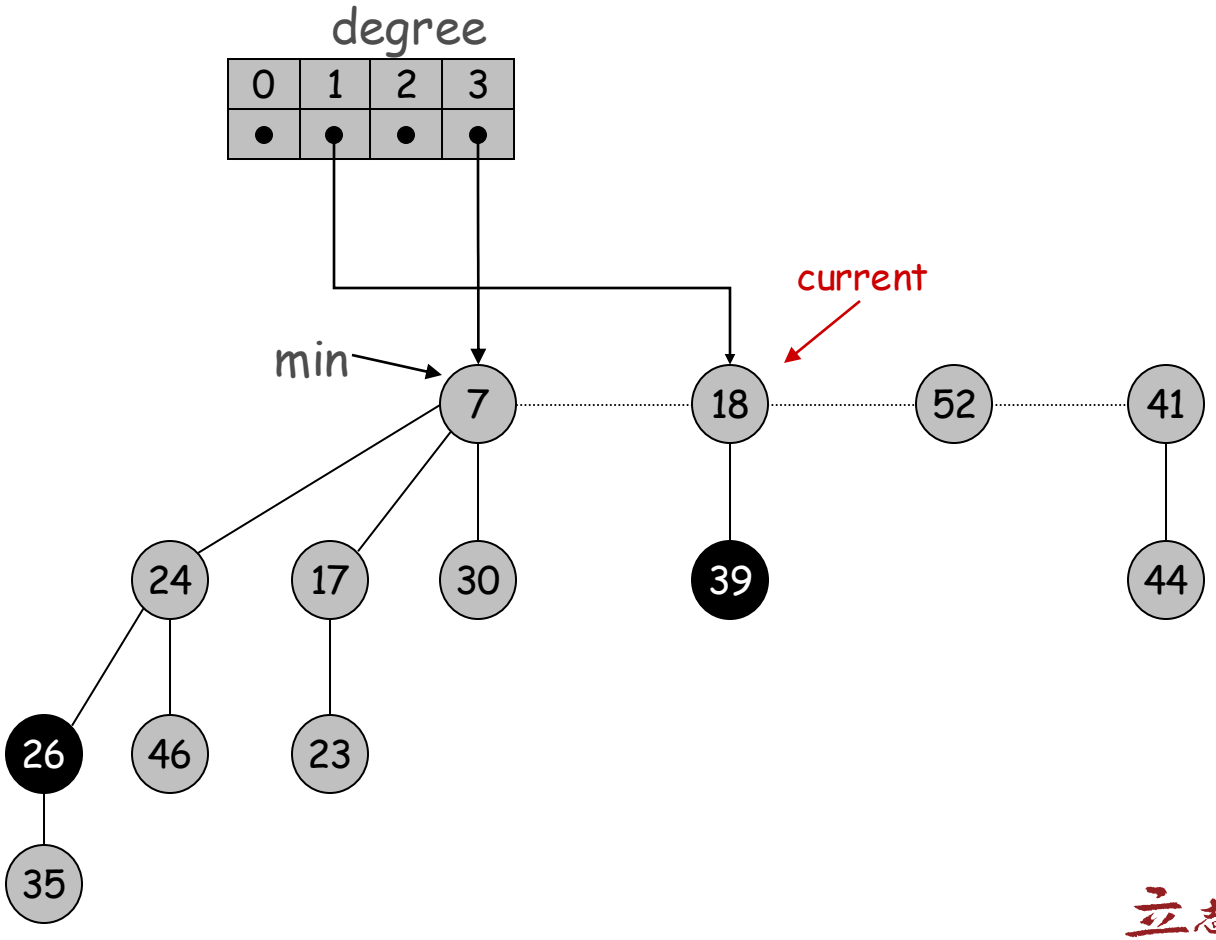

Fibonacci Heaps: Delete Min

Delete min.

- Delete min; meld its children into root list; set unmarked; update min.
- Consolidate trees so that no two roots have same degree.

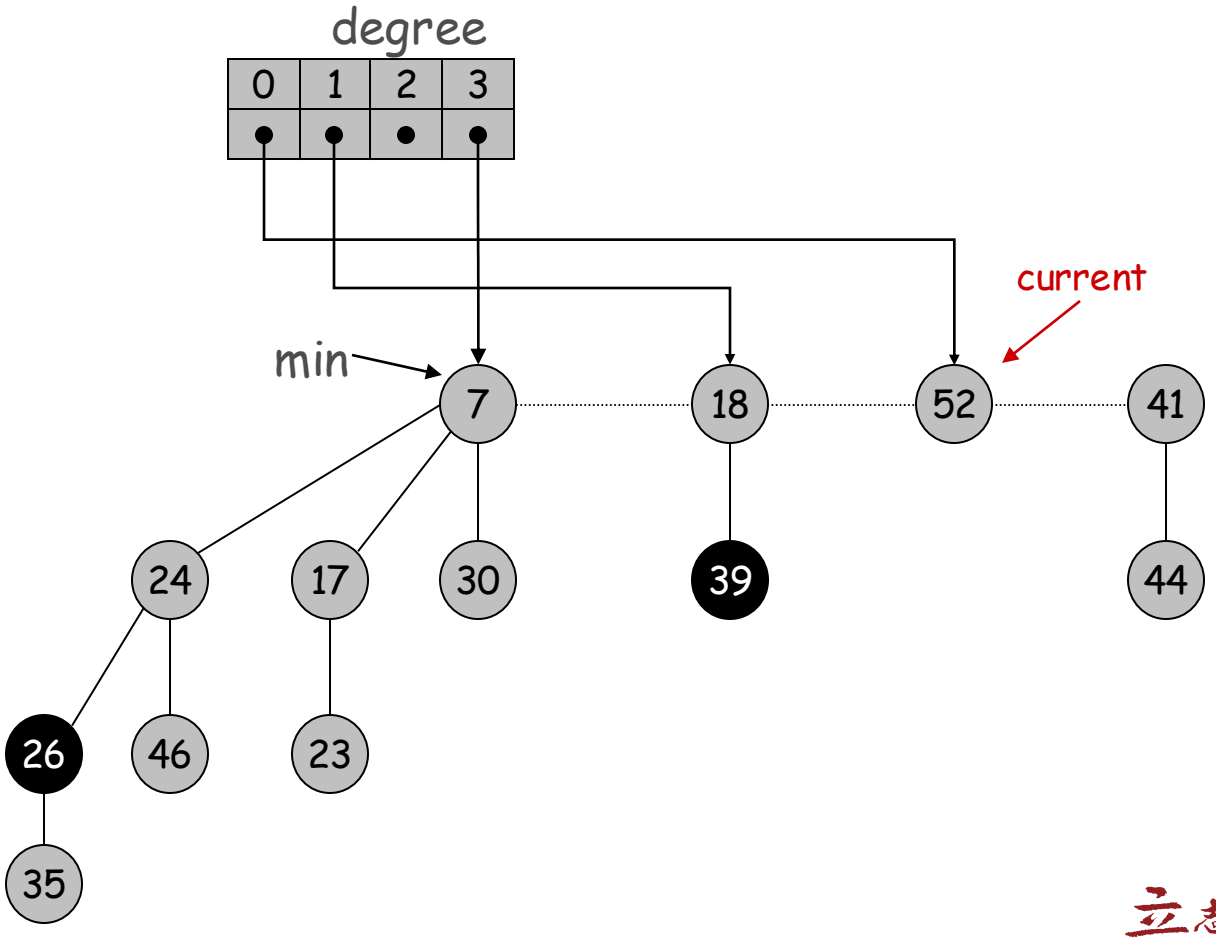

Fibonacci Heaps: Delete Min

Delete min.

- Delete min; meld its children into root list; set unmarked; update min.
- Consolidate trees so that no two roots have same degree.

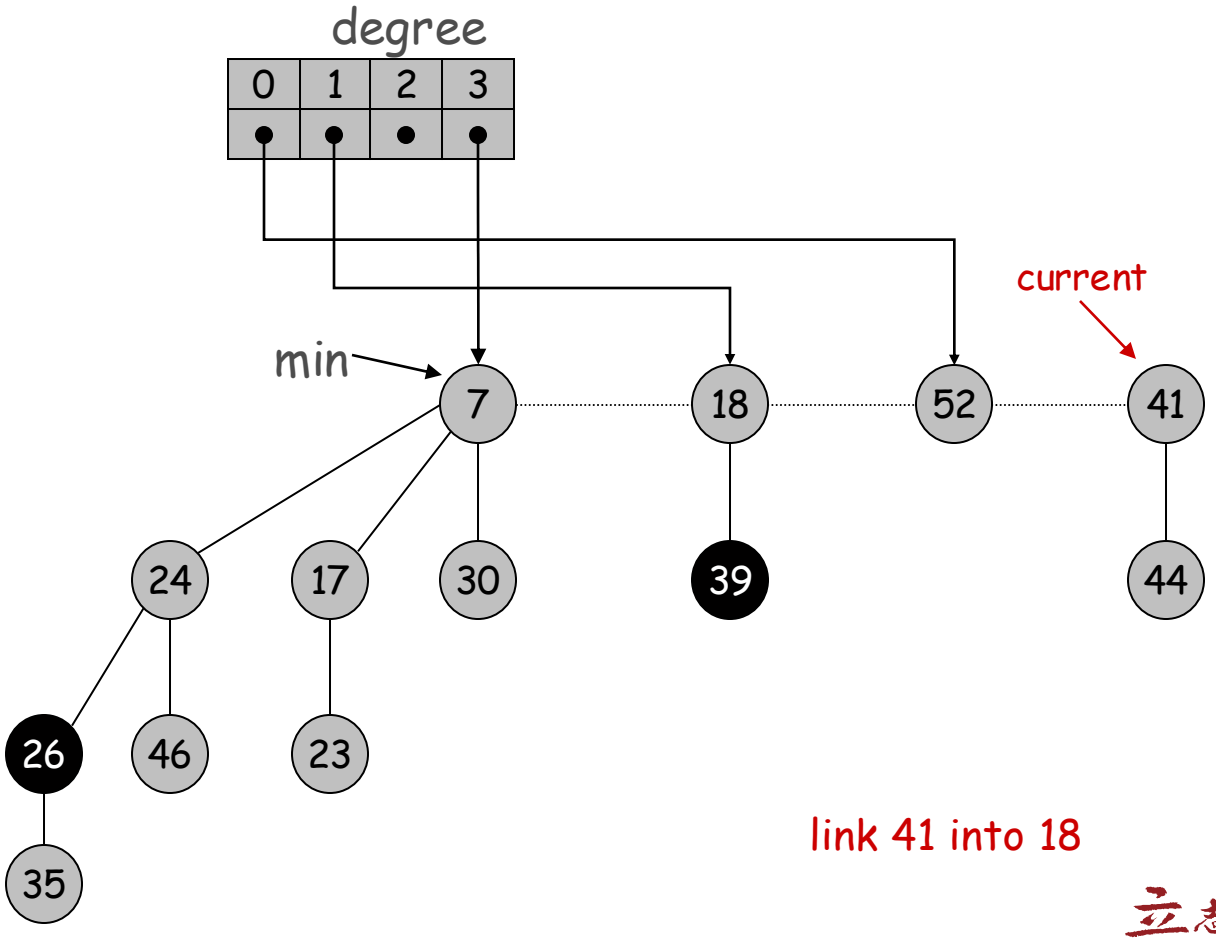

link 41 into 18

Fibonacci Heaps: Delete Min

Delete min.

- Delete min; meld its children into root list; set unmarked; update min.
- Consolidate trees so that no two roots have same degree.

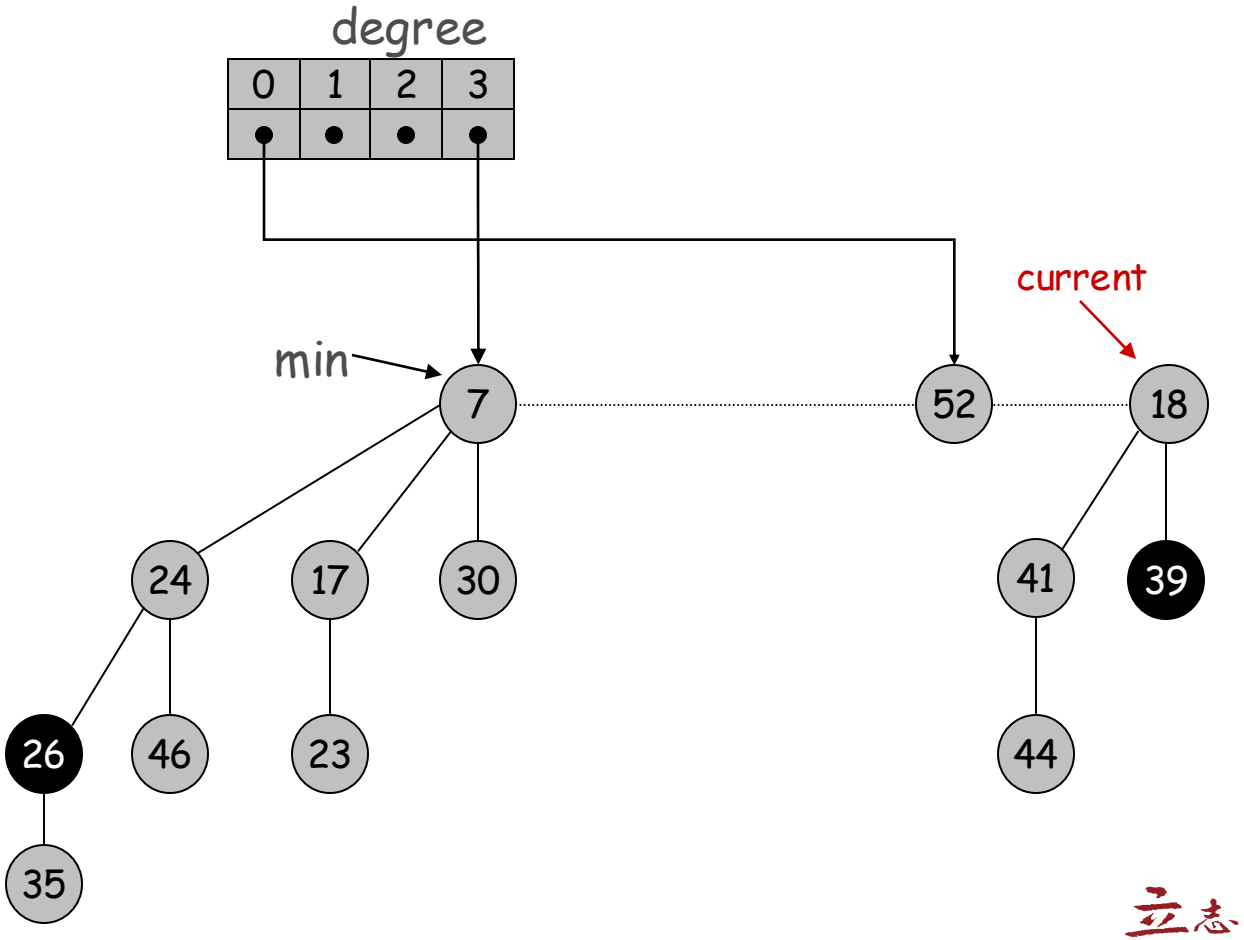

Fibonacci Heaps: Delete Min

Delete min.

- Delete min; meld its children into root list; set unmarked; update min.
- Consolidate trees so that no two roots have same degree.

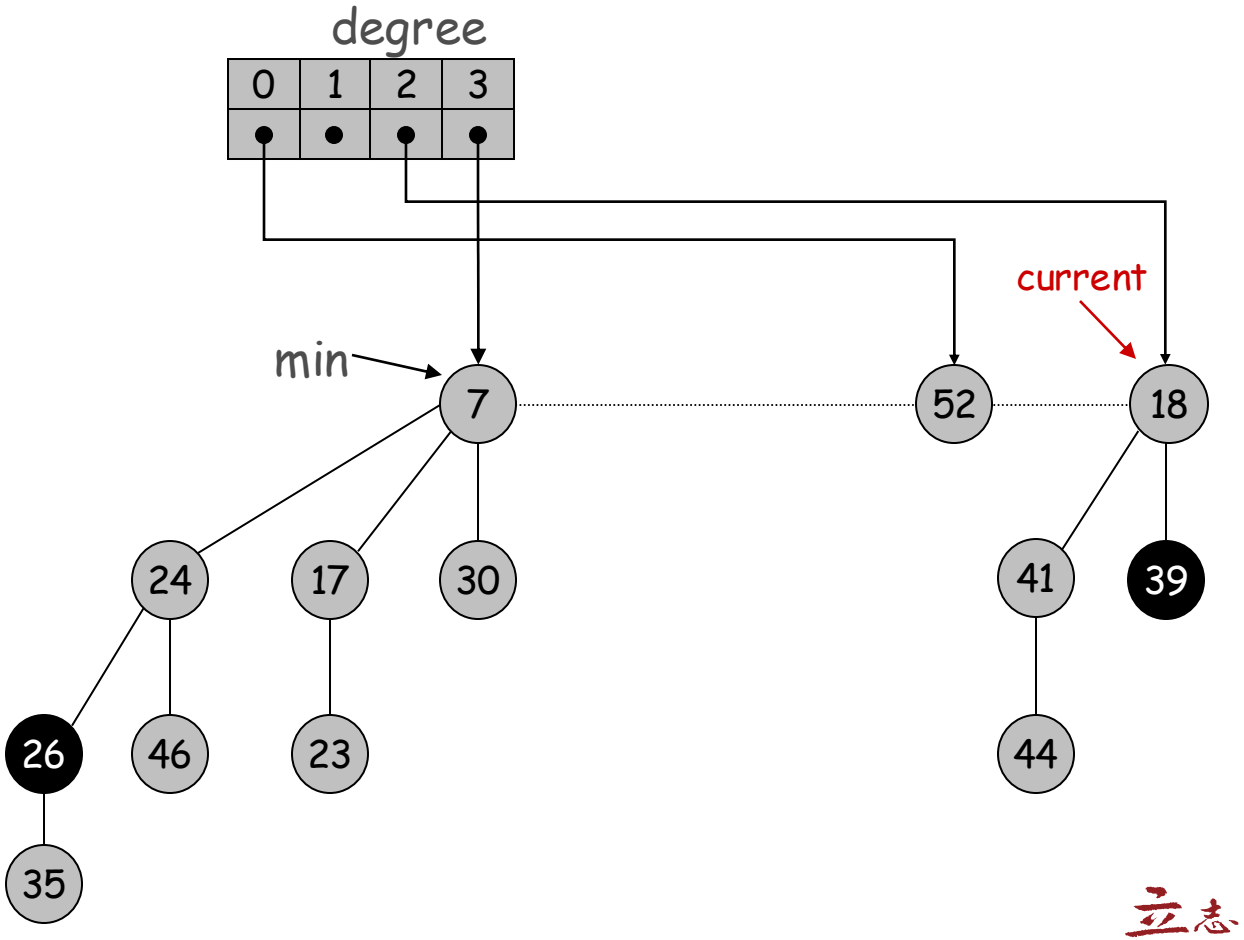

Fibonacci Heaps: Delete Min

Delete min.

- Delete min; meld its children into root list; set unmarked; update min.
- Consolidate trees so that no two roots have same degree.

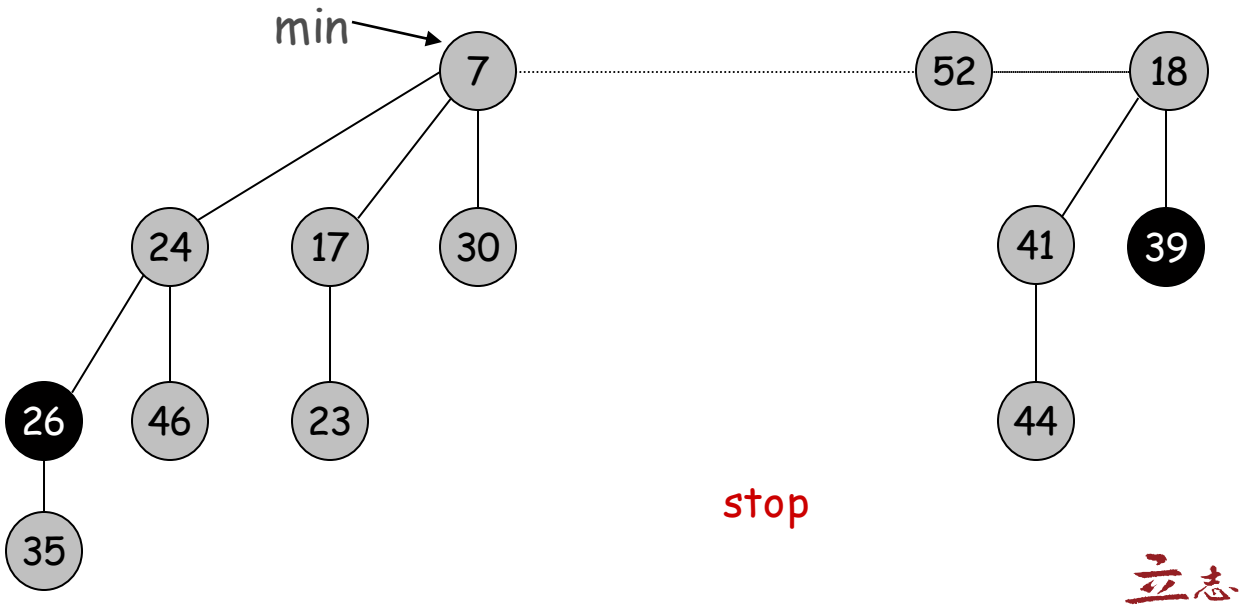

Fibonacci Heaps: Delete Min

First remove the H.min node.

Then add each of its children (along with its subtree) to the root list.

- There may now be many trees in the root list.
- To find the new H.min, we need to iterate through the roots of all the trees, which may be slow.
- So we want to decrease the number of trees in the root list.
- Def The degree of a node is its number of children.

We merge some of the trees in the root list, so that none of the roots have the same degree.

- The merging function is called CONSOLIDATE.

Fibonacci Heaps: Delete Min

Let D(H.n) be upper bound on the degree of any node in a Fibonacci heap with n nodes.

- We show later D(H.n) = O(log n).

Use an array A of size D(H.n)+1.

- A[i] points to a tree in the root list with degree i.

Iterate through all the trees in the root list.

- If the current tree x we process has degree d, and $A[d] = y \neq NIL$, then there's already a tree y in the root list with degree d.
- Since we don't want two trees in the root list with the same degree, we link the roots of x and y.
  - This creates a tree in the root list with degree d+1, and removes the tree with degree d.
  - The direction we link depends on which root has the smaller key.
- Then set A[d] = NIL, and set A[d+1] to point to newly linked tree.
- If the new root is marked, clear the mark.

Finally, iterate through A array, and set H.min to the min root value.

Fibonacci Heaps: Delete Min Analysis

Let H denote the heap before the delete min.

$$\Phi(H) = \text{trees}(H) + 2 \cdot \text{marks}(H)$$

potential function

The real cost includes

- O(D(n)) for moving children of H.min to root list.
- TCONSOLIDATE operate on a list of size at most D(n)+t(H)-1.
- Every time through the while loop, we link two of the trees in the root list.
  - Each tree can be linked (to a tree whose root has a smaller key) at most once.
  - So, the total number of iterations of the while loop is at most the root list size, i.e., O(D(n)+t(H)).
- **So, the real cost is O(D(n)+t(H)).**

For the amortized cost, the potential before the extract min is at most t(H)+2m(H).

The potential after extract is $\leq$ (D(n)+1)+2m(H).

- All trees in root list of H' have different degrees, and max degree is D(n).
- No new nodes get marked during extract.

So amortized cost is

$$O\big(D(n) + t(H)\big) + \big((D(n) + 1) + 2m(H)\big) - \big(t(H) + 2m(H)\big) = O(D(n)) + O(t(H)) - t(H) = O(D(n)).$$

- The last equality follows because we can scale up the units of the potential to cancel out the hidden constant in O(t(H)).

Fibonacci Heaps: Decrease Key

Intuition for deceasing the key of node x.

- If heap-order is not violated, just decrease the key of x.
- Otherwise, cut tree rooted at x, meld into root list, and unmark it.
- Look at p, the parent of x
  - If p is a root, stop
  - If it's unmarked, mark it
  - If it's marked, cut it off, meld into root list, and unmark it, and check the parent of p recursively.

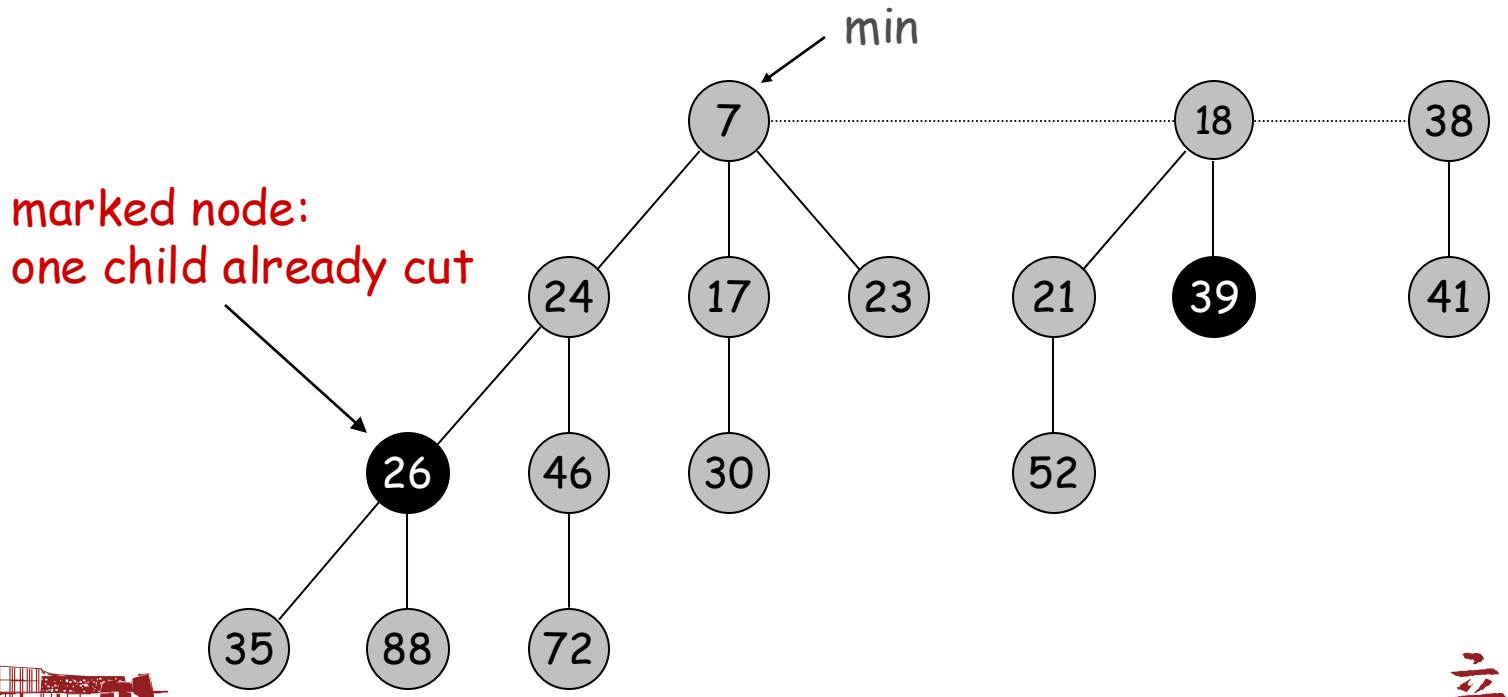

Fibonacci Heaps: Decrease Key

Case 1. [heap order not violated]

- Decrease key of x.
- Change heap min pointer (if necessary).

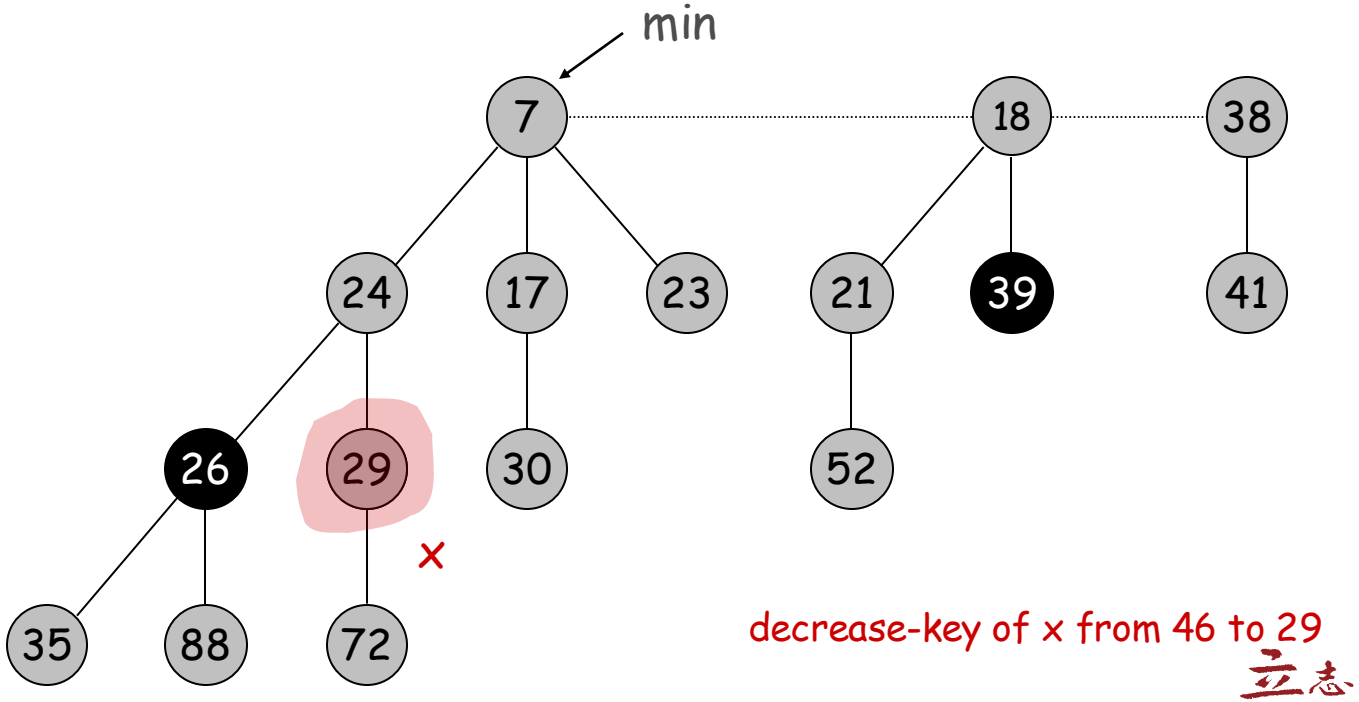

decrease-key of x from 46 to 29

Fibonacci Heaps: Decrease Key

Case 2a. [heap order violated]

- Decrease key of x.
- Cut tree rooted at x, meld into root list, and unmark.
- If parent p of x is unmarked (hasn't yet lost a child), mark it;
  Otherwise, cut p, meld into root list, and unmark
  (and do so recursively for all ancestors that lose a second child).

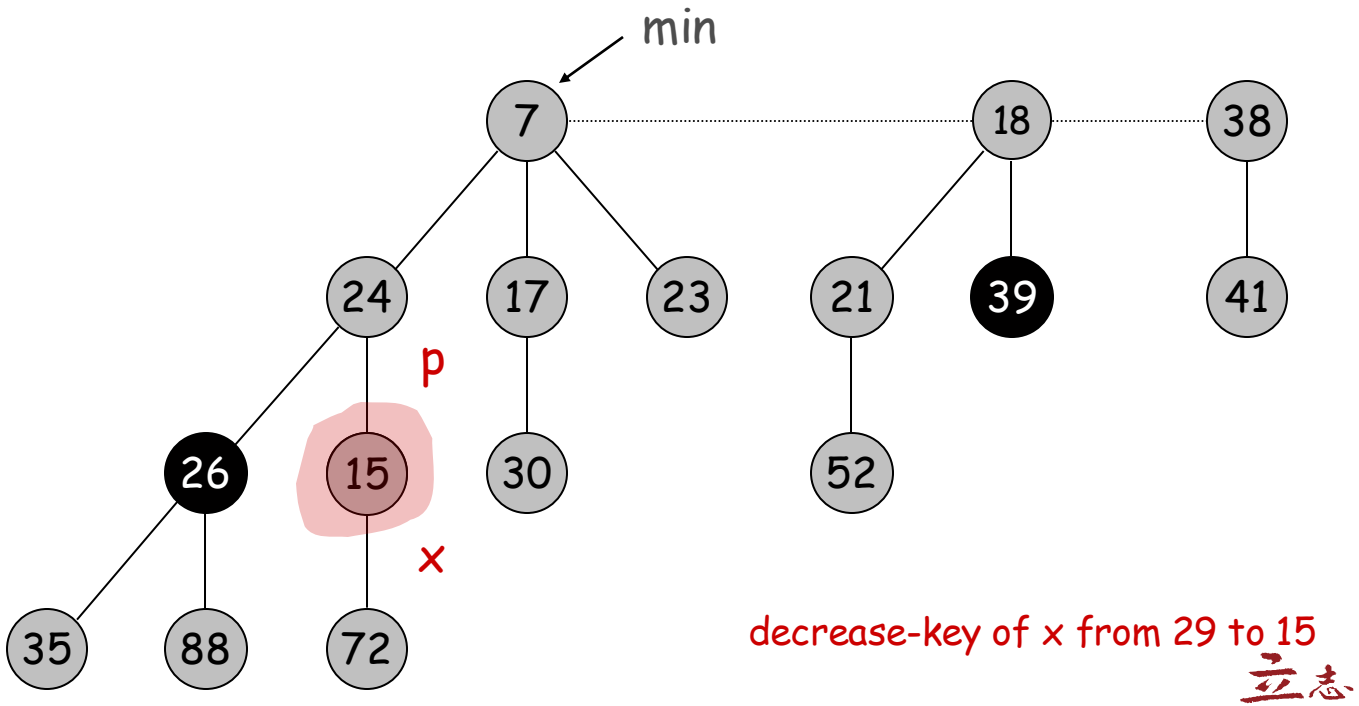

decrease-key of x from 29 to 15

Fibonacci Heaps: Decrease Key

Case 2a. [heap order violated]

- Decrease key of x.
- Cut tree rooted at x, meld into root list, and unmark.
- If parent p of x is unmarked (hasn't yet lost a child), mark it;
  Otherwise, cut p, meld into root list, and unmark
  (and do so recursively for all ancestors that lose a second child).

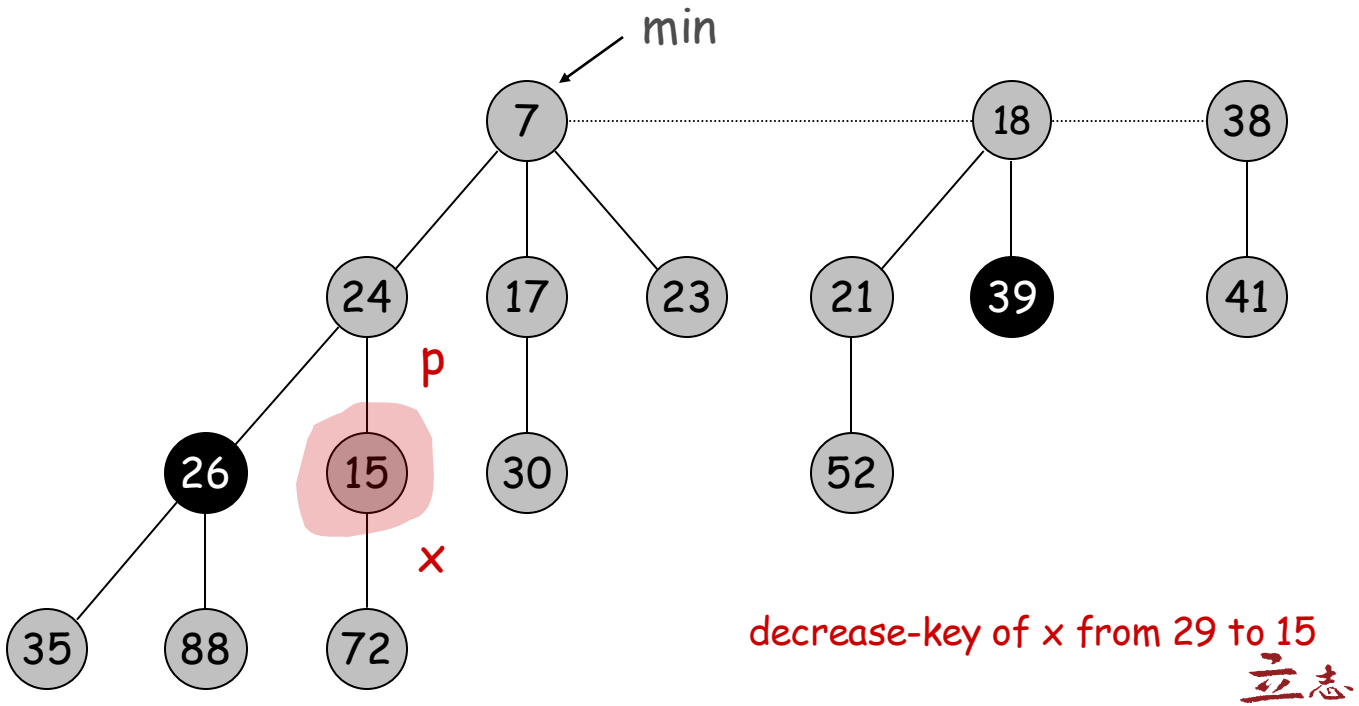

decrease-key of x from 29 to 15

Fibonacci Heaps: Decrease Key

Case 2a. [heap order violated]

- Decrease key of x.
- Cut tree rooted at x, meld into root list, and unmark.
- If parent p of x is unmarked (hasn't yet lost a child), mark it;
  Otherwise, cut p, meld into root list, and unmark
  (and do so recursively for all ancestors that lose a second child).

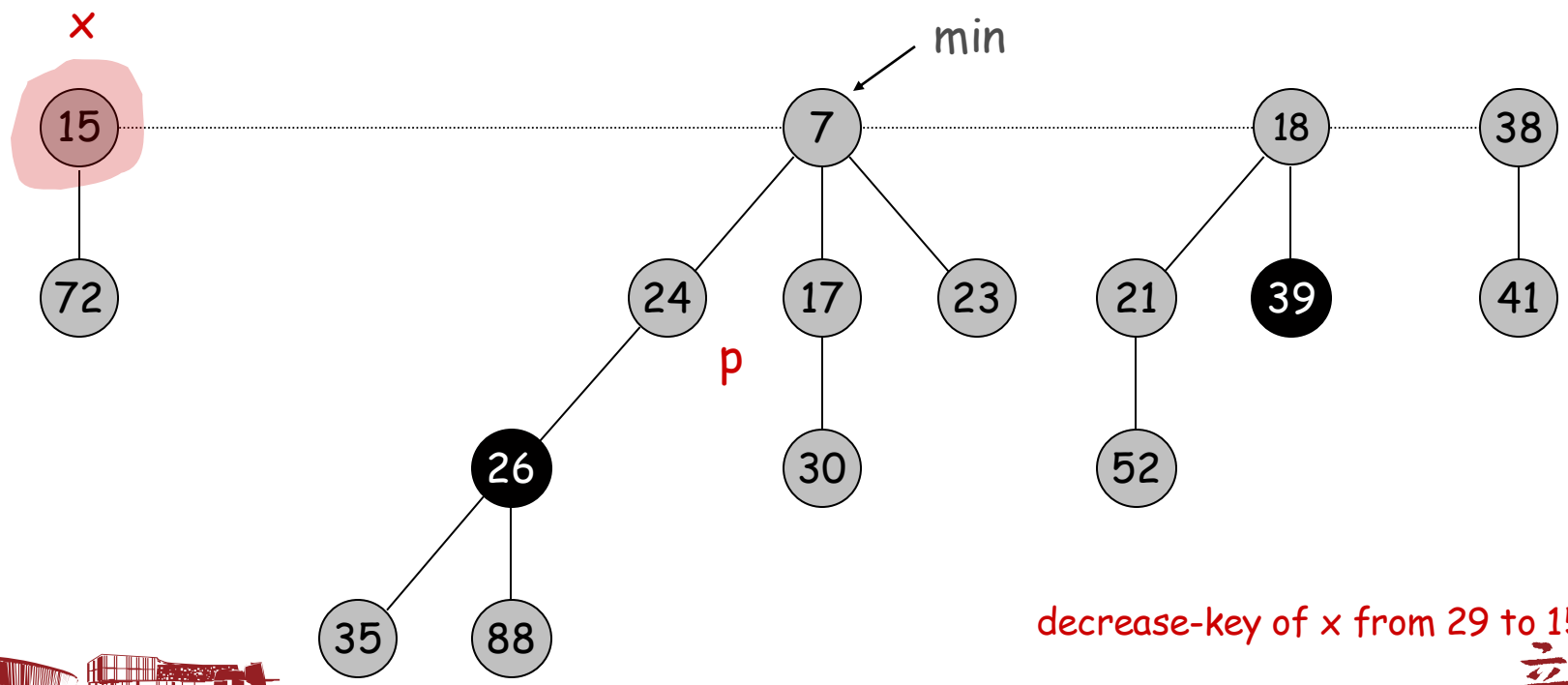

decrease-key of x from 29 to 15

Fibonacci Heaps: Decrease Key

Case 2a. [heap order violated]

- Decrease key of x.
- Cut tree rooted at x, meld into root list, and unmark.
- If parent p of x is unmarked (hasn't yet lost a child), mark it;
  Otherwise, cut p, meld into root list, and unmark
  (and do so recursively for all ancestors that lose a second child).

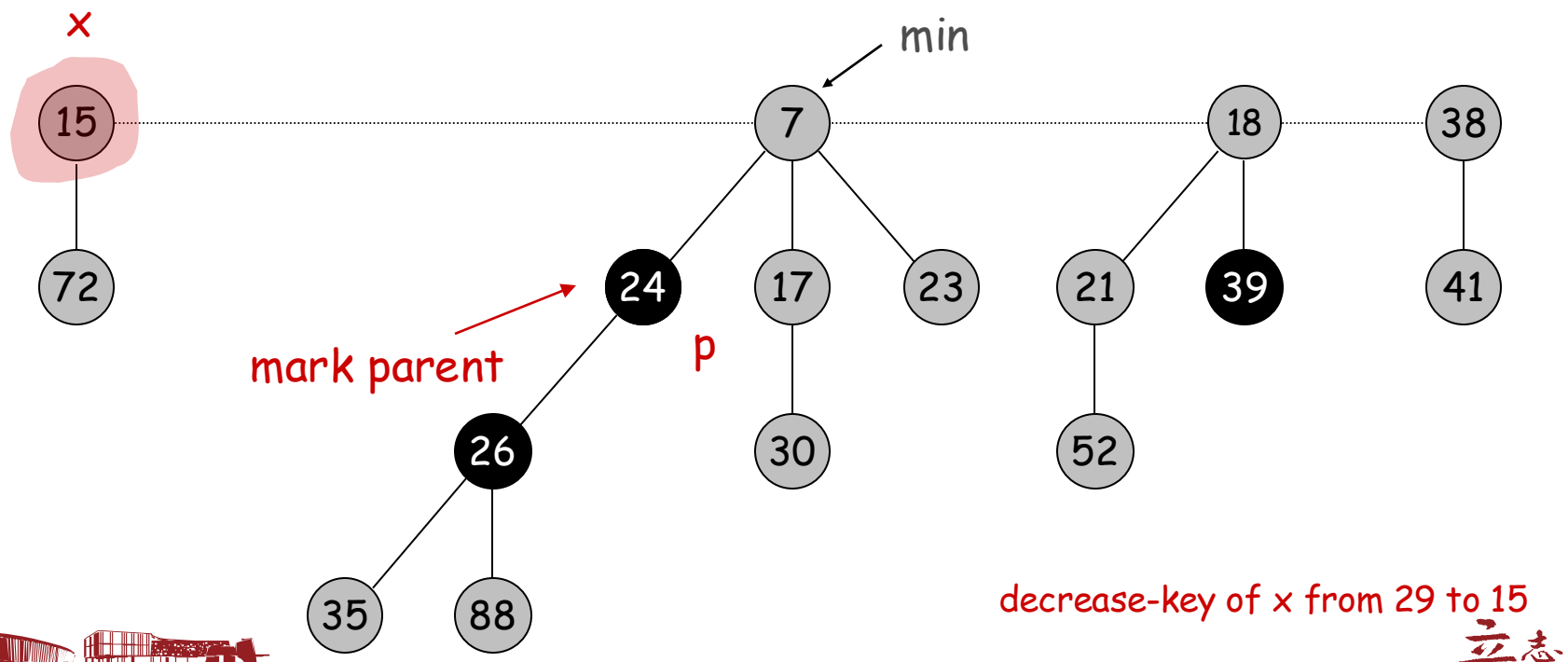

Fibonacci Heaps: Decrease Key

Case 2b. [heap order violated]

- Decrease key of x.
- Cut tree rooted at x, meld into root list, and unmark.
- If parent p of x is unmarked (hasn't yet lost a child), mark it;
  Otherwise, cut p, meld into root list, and unmark
  (and do so recursively for all ancestors that lose a second child).

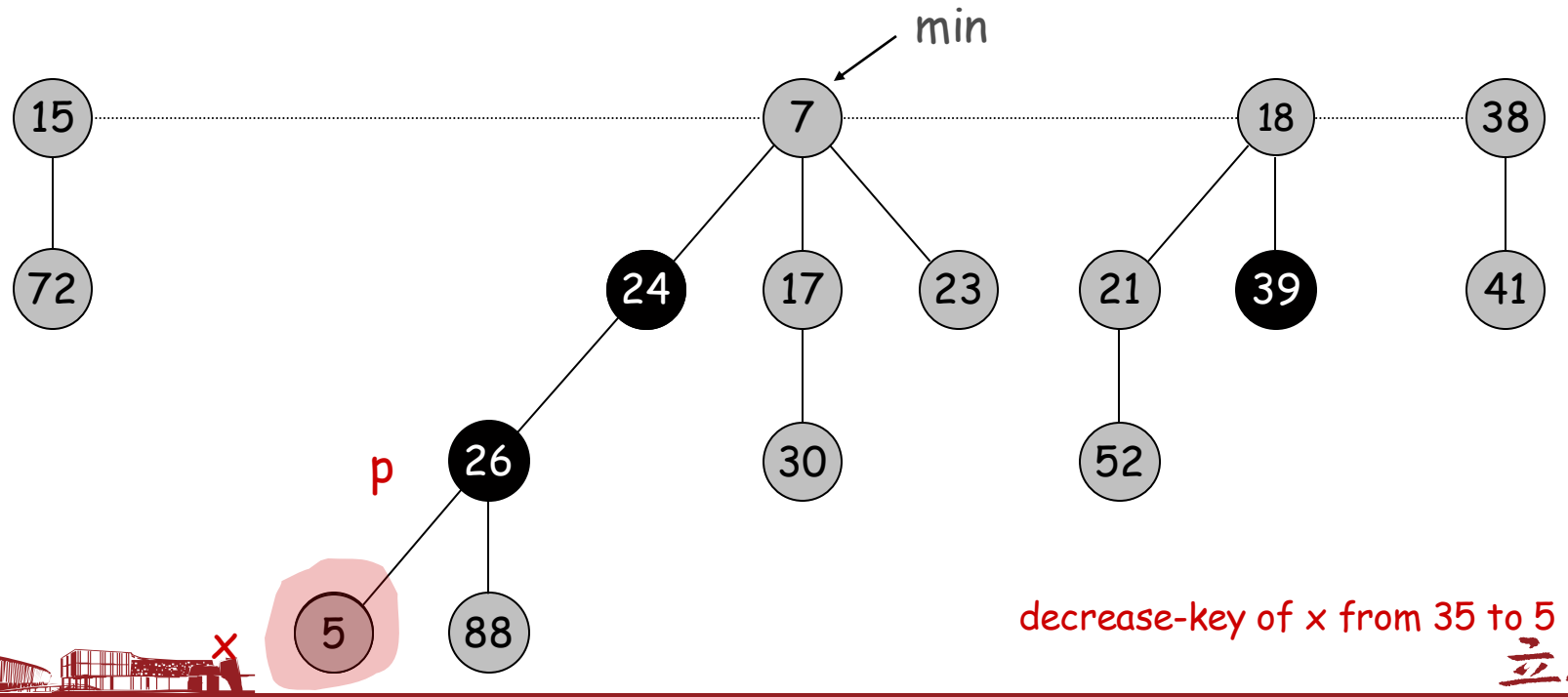

decrease-key of x from 35 to 5

Fibonacci Heaps: Decrease Key

Case 2b. [heap order violated]

- Decrease key of x.
- Cut tree rooted at x, meld into root list, and unmark.
- If parent p of x is unmarked (hasn't yet lost a child), mark it;
  Otherwise, cut p, meld into root list, and unmark
  (and do so recursively for all ancestors that lose a second child).

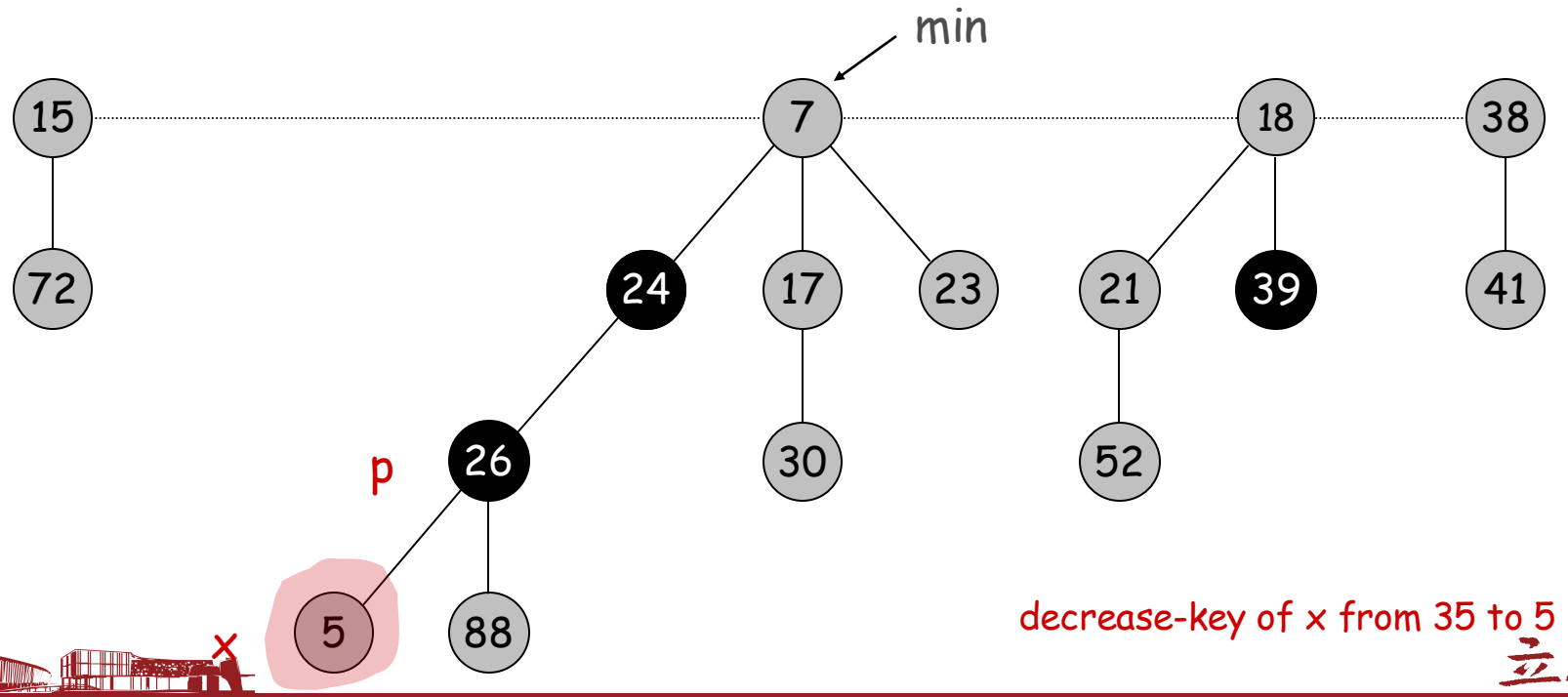

decrease-key of x from 35 to 5

Fibonacci Heaps: Decrease Key

Case 2b. [heap order violated]

- Decrease key of x.
- Cut tree rooted at x, meld into root list, and unmark.
- If parent p of x is unmarked (hasn't yet lost a child), mark it;
  Otherwise, cut p, meld into root list, and unmark
  (and do so recursively for all ancestors that lose a second child).

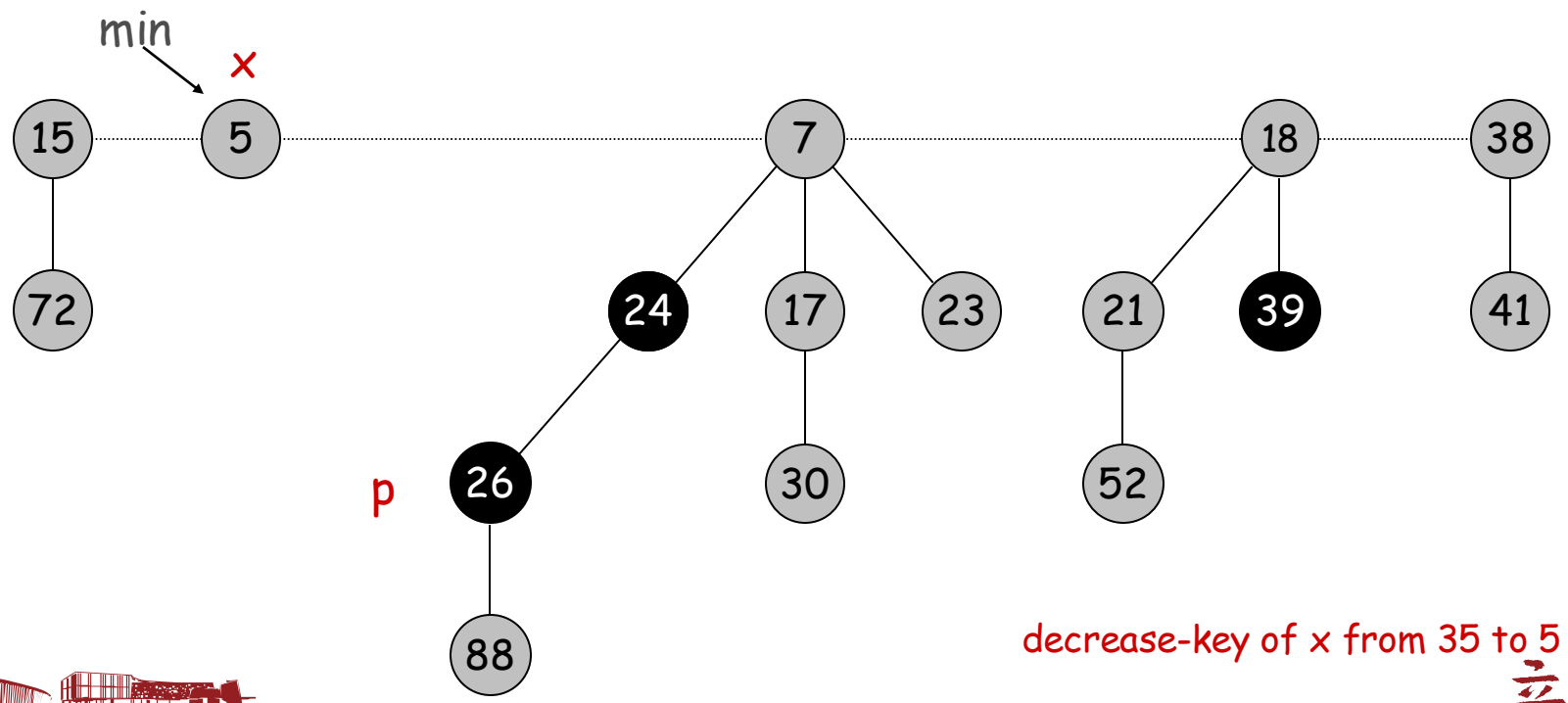

decrease-key of x from 35 to 5

Fibonacci Heaps: Decrease Key

Case 2b. [heap order violated]

- Decrease key of x.
- Cut tree rooted at x, meld into root list, and unmark.
- If parent p of x is unmarked (hasn't yet lost a child), mark it;
  Otherwise, cut p, meld into root list, and unmark
  (and do so recursively for all ancestors that lose a second child).

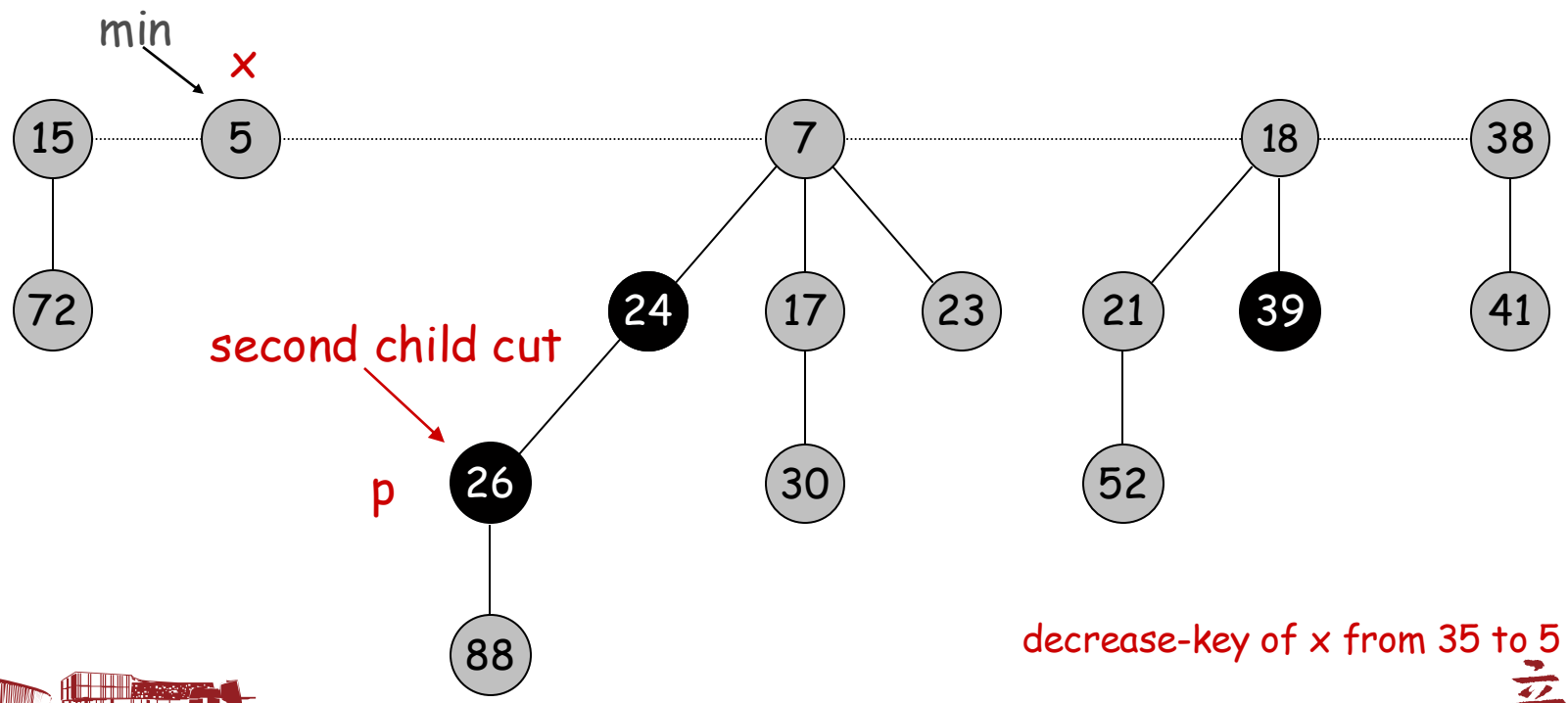

decrease-key of x from 35 to 5

Fibonacci Heaps: Decrease Key

Case 2b. [heap order violated]

- Decrease key of x.
- Cut tree rooted at x, meld into root list, and unmark.
- If parent p of x is unmarked (hasn't yet lost a child), mark it;
  Otherwise, cut p, meld into root list, and unmark
  (and do so recursively for all ancestors that lose a second child).

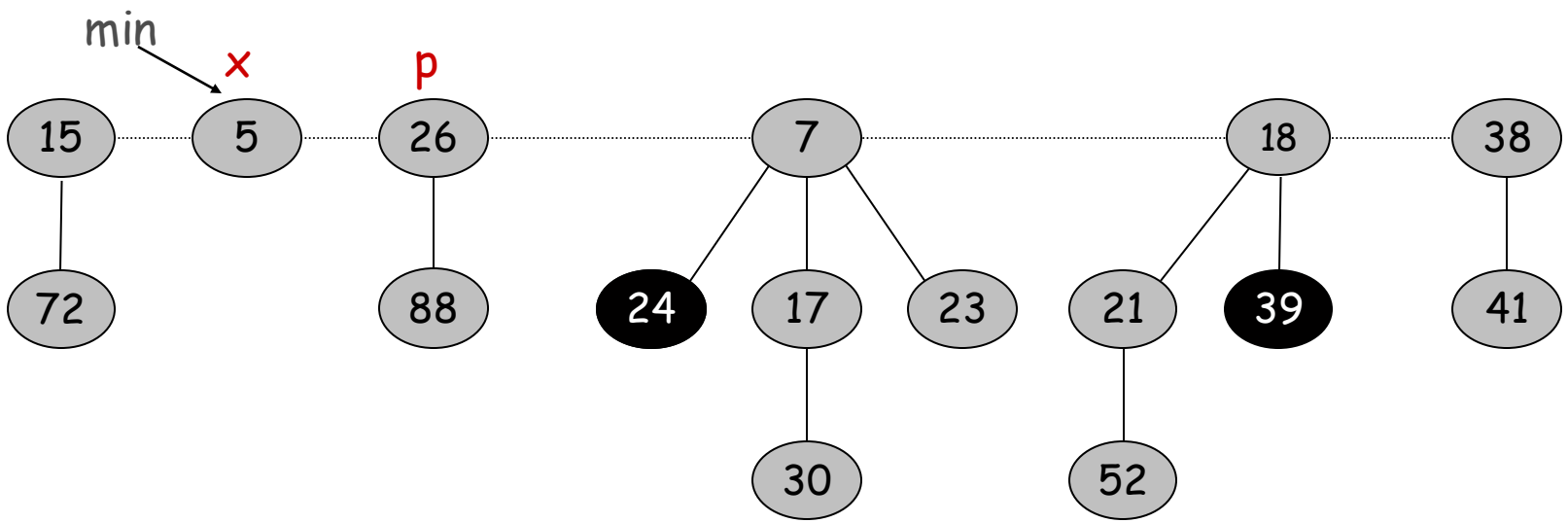

decrease-key of x from 35 to 5

Fibonacci Heaps: Decrease Key

Case 2b. [heap order violated]

- Decrease key of x.
- Cut tree rooted at x, meld into root list, and unmark.
- If parent p of x is unmarked (hasn't yet lost a child), mark it;
  Otherwise, cut p, meld into root list, and unmark
  (and do so recursively for all ancestors that lose a second child).

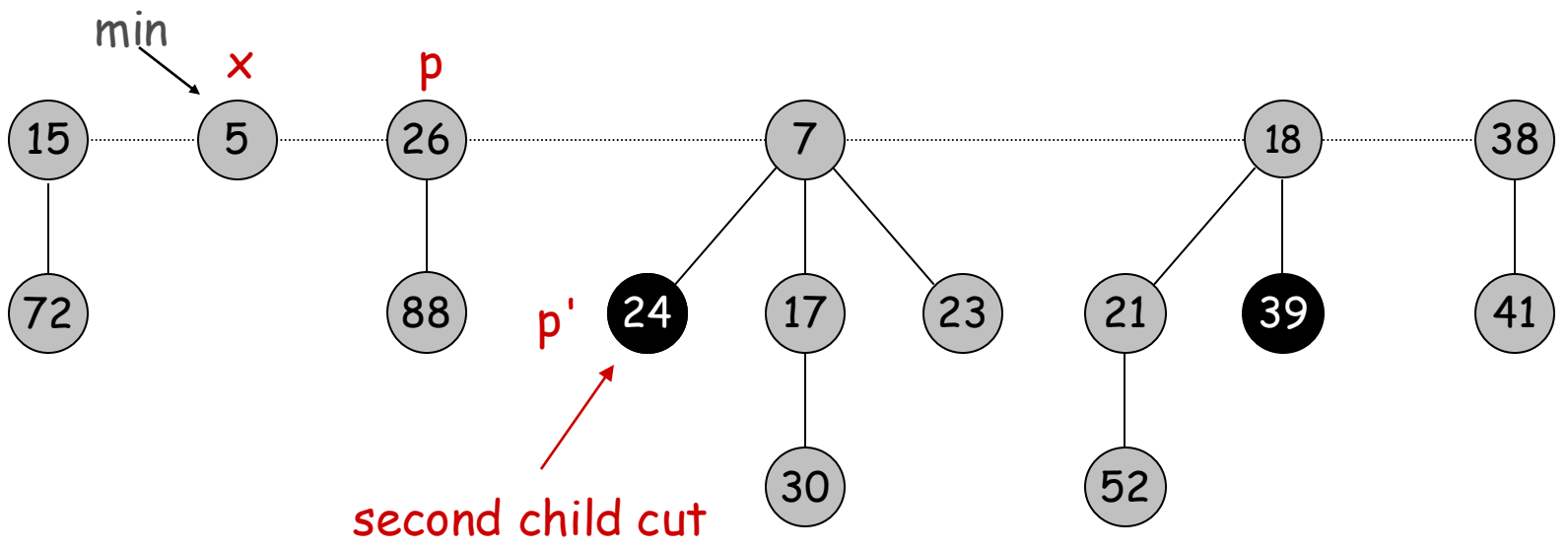

decrease-key of x from 35 to 5

Fibonacci Heaps: Decrease Key

Case 2b. [heap order violated]

- Decrease key of x.
- Cut tree rooted at x, meld into root list, and unmark.
- If parent p of x is unmarked (hasn't yet lost a child), mark it;
  Otherwise, cut p, meld into root list, and unmark
  (and do so recursively for all ancestors that lose a second child).

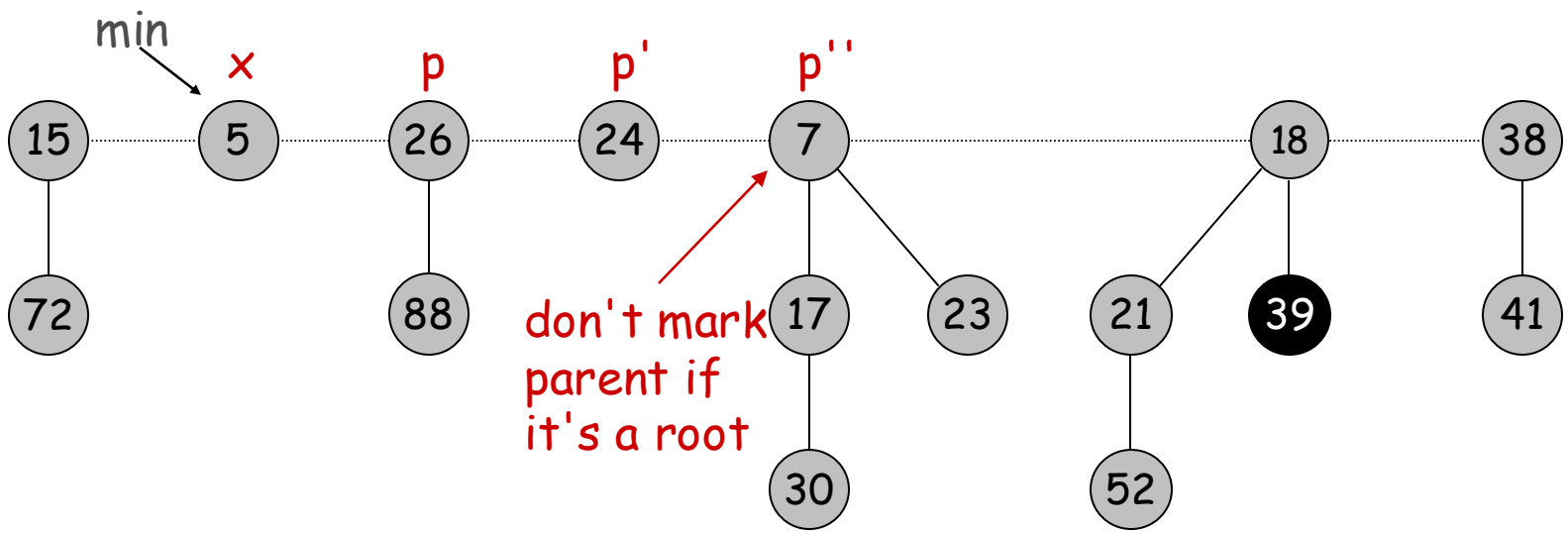

decrease-key of x from 35 to 5

Fibonacci Heaps: Decrease Key Analysis

Let H denote the heap before the decrease key operation.

$\Phi(H) = \text{trees}(H) + 2 \cdot \text{marks}(H)$

potential function

Cutting out a node takes O(1) time.

Suppose a decrease key operation creates c cascading cuts.

Then the actual cost is O(c).

For the amortized cost

- Each cut creates one more tree in the root list.
- It also removes one marked node.
- After the decrease key, the root list contains t(H)+c trees.
- It also contains $\leq m(H) - c + 2$ marked nodes.
  - c-1 nodes were unmarked by cascading cuts, and the last call to CASCADING-CUT may have marked a node.
- So the change in potential is $\left(\left(t(H)\right) + c + 2(m(H) - c + 2)\right) - \left(\left(t(H) + 2m(H)\right)\right) = 4 - c.$
- So the amortized cost is $O(c) + 4 - c = O(1)$ by scaling the hidden constant in the potential appropriately.

Fibonacci Heaps: Union

Union. Combine two Fibonacci heaps.

Representation. Root lists are circular, doubly linked lists.

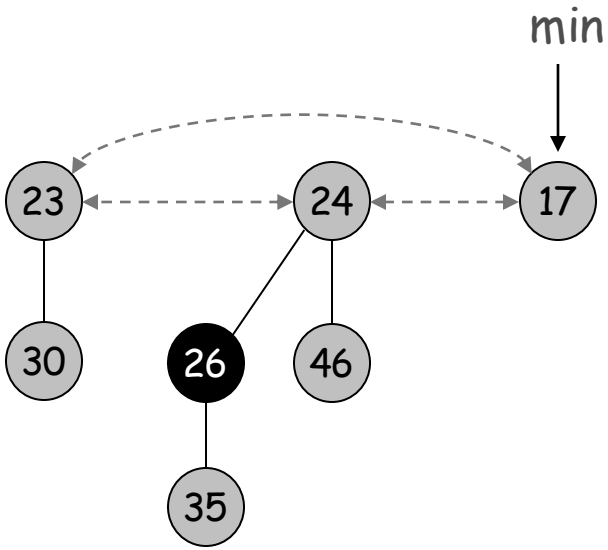

Heap H'

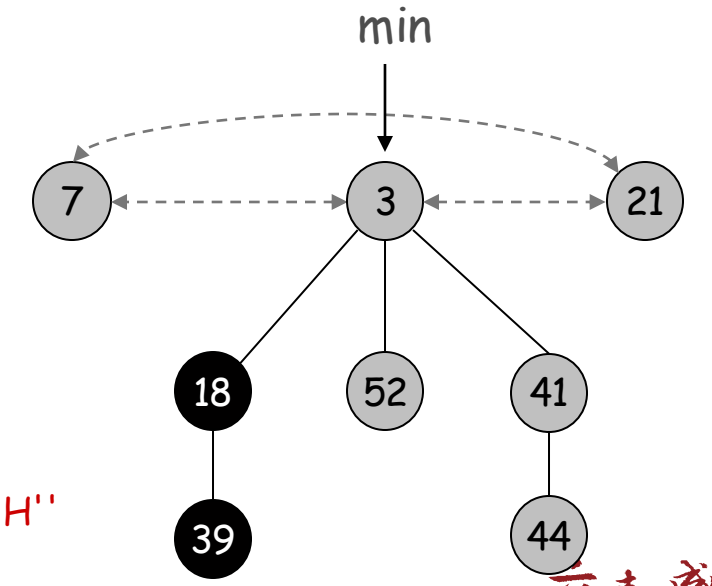

Heap H''

Fibonacci Heaps: Union

Union. Combine two Fibonacci heaps.

Representation. Root lists are circular, doubly linked lists.

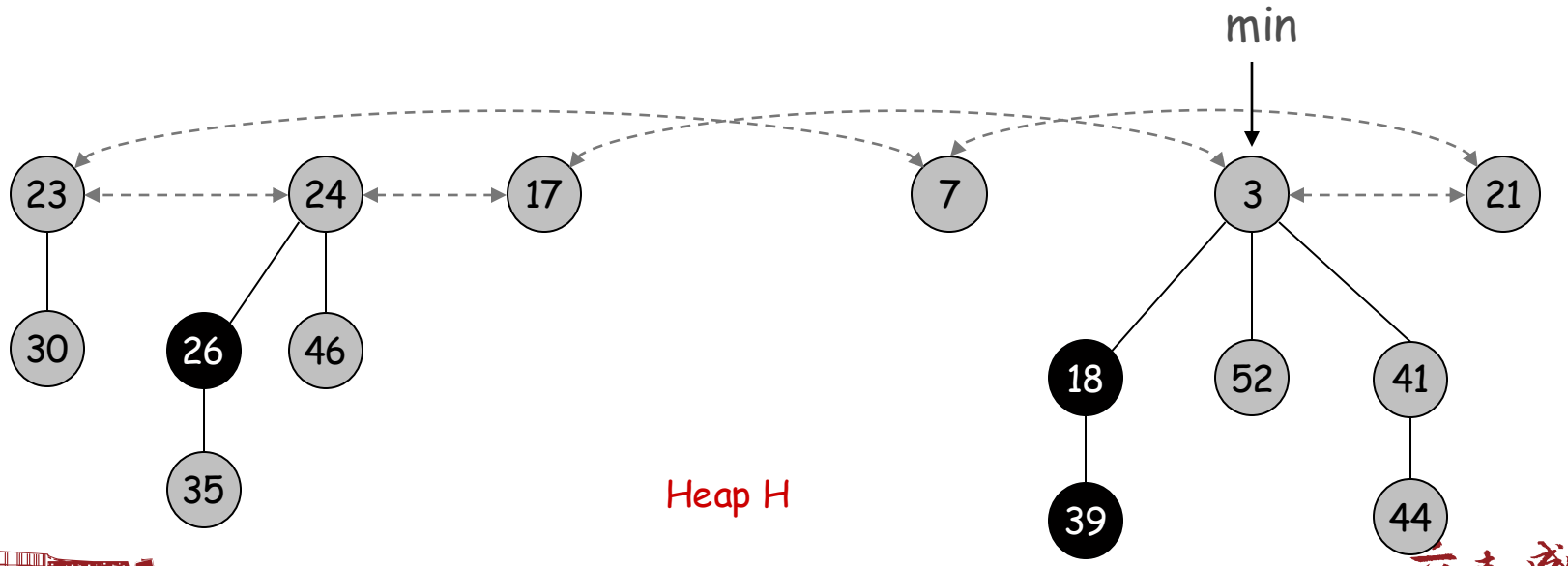

Fibonacci Heaps: Union

$\Phi(H) = \text{trees}(H) + 2 \cdot \text{marks}(H)$

potential function

Union of two heaps

- Concatenate the root lists of the two heaps H_1 and H_2.
- Set H.min to $\min(H_1.min, H_2.min)$
- Cost = O(1).
- Since new root list is the union of the two old root lists, the change in potential is $\Phi(H') - \big(\Phi(H_1) + \Phi(H_2)\big) = t(H') + 2m(H') - \big(t(H_1) + 2m(H_1) + t(H_2) + 2m(H_2)\big) = 0.$
- Thus the amortized cost = O(1)

Actual cost. O(1)

Change in potential. 0

Amortized cost. O(1)

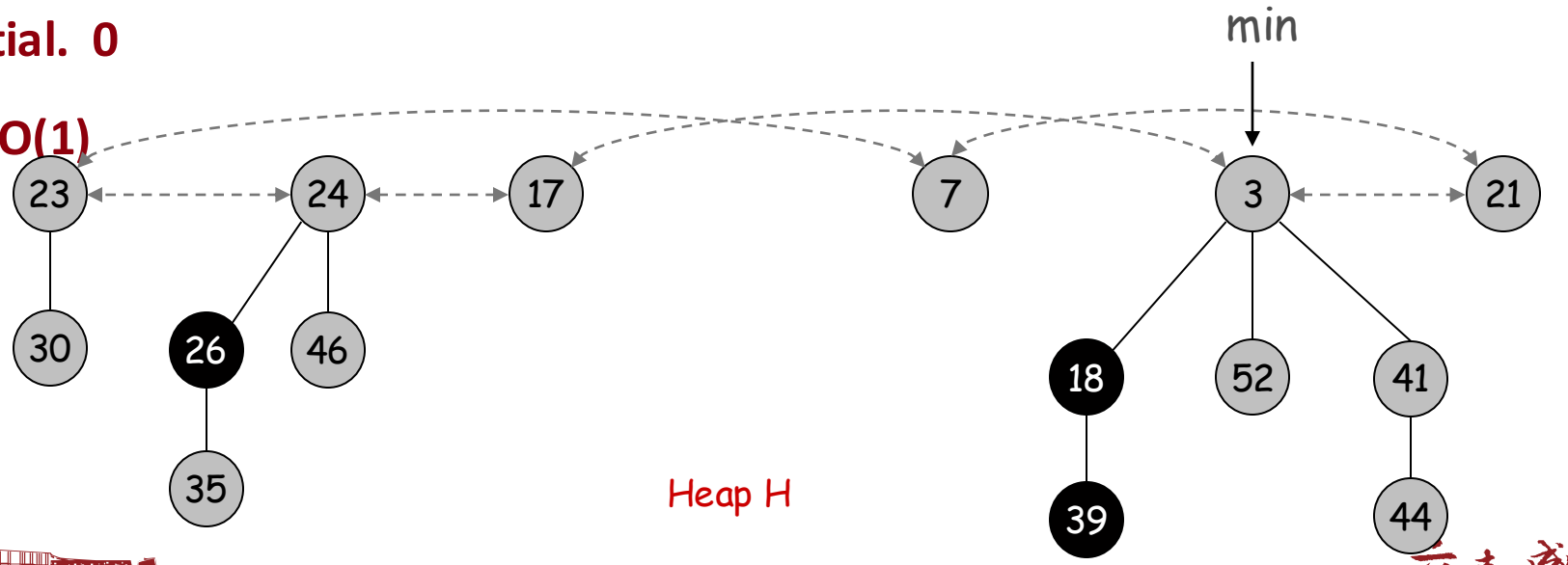

Fibonacci Heaps: Delete

Delete node x.

- decrease-key of x to -∞.
- delete-min element in heap.

Amortized cost. O(D(n))

- O(1) amortized for decrease-key.
- O(D(n)) amortized for delete-min.

$$\Phi(H) = \text{trees}(H) + 2 \cdot \text{marks}(H)$$

potential function

Analysis Summary

Insert. O(1)

Delete-min. O(D(n))

Decrease-key. O(1)

Union. O(1)

Delete. O(D(n))

Key lemma. D(n) = O(log n).

number of nodes is exponential in degree

Bounding the max degree

- So far, all the operations have O(1) amortized cost, except extract-min (and delete, which calls extract-min).
- extract-min has amortized cost O(D(n)), where D(n) is the max degree of any node in the Fibonacci heap.
- Def The golden ratio is $\phi = \frac{1+\sqrt{5}}{2} \approx 1.618$.
  - ϕ is the positive solution to the equation $x^2 = x + 1$.
- Recall the Fibonacci F_n is defined by $F_0 = 0, F_1 = 1$, and $F_n = F_{n-1} + F_{n-2}$ for $n \geq 2$.
  - The sequence is 0, 1, 1, 2, 3, 5, 8, 13, 21, 34, …
- Fact 1 $F_n = \lfloor \frac{\phi^n}{\sqrt{5}} + \frac{1}{2} \rfloor$.
  - For a proof, see section 3.2 of *Introduction to Algorithms.*
- Fact 2 $F_{n+2} = 1 + \sum_{i=0}^{n} F_i$.
- Fact 3 $F_{n+2} \geq \phi^n$.
- We show $D(n) \leq \lfloor \log_\phi n \rfloor$.
- Def For any node let x.deg denote its degree, and size(x) be the number of nodes in x's subtree (including x).

Bounding the max degree

- Lemma 1 Let x be a node in a Fibonacci heap, and suppose $x.deg = k$. Let $y_1, \ldots, y_k$ be the children of x, in the order they were linked to x, from earliest to latest. Then $y_1.deg \geq 0$, and $y_i.deg \geq i - 2$ for $i = 2, \ldots, k$.
- Proof Obviously $y_1.deg \geq 0$.
  - For $i \geq 2$, when y_i was linked to x, $y_1, \ldots, y_{i-1}$ were already children of x, and so x had degree $\geq i - 1$.
  - y_i was linked to x during CONSOLIDATE.
    - So when y_i was linked, we had $y_i.deg = x.deg \geq i - 1$.
  - Since y_i was linked to x, it could have lost at most one child.
    - As soon as y_i loses two children, it's cut and moved to the root list.
  - So $y_i.deg \geq i - 2$.

Bounding the max degree

- Lemma 2 Let x be a node in a Fibonacci heap and suppose $x.deg = k$. Then $size(x) \geq F_{k+2} \geq \phi^k$.
- Proof
  - s_k = min size of any node z with degree[z] = k in a Fibonacci heap, we have $s_0 = 1$, $s_1 = 2$, $s_2 = 3$, and s_k <= size(z)
  - Suppose $y_1, y_2, \ldots, y_k$ is the child nodes of x and they link to x in order
    - $size(x) \geq s_k = 2 + \sum_{i=2}^{k} s_{degree[y_i]} \geq 2 + \sum_{i=2}^{k} s_{i-2}$ because of Lemma 1: $degree[y_i] \geq i - 2$ and $s_{degree[y_i]} \geq s_{i-2}$
    - By induction to prove for any k, $s_k \geq F_{k+2}$
      - Base: k =0 and k =1, it holds
      - By induction, suppose $k \geq 2$ and $s_i \geq F_{i+2}$, $i = 0,1,\ldots,k-1$, we have
      - $s_k \geq 2 + \sum_{i=2}^{k} s_{i-2} \geq 2 + \sum_{i=2}^{k} F_i = 1 + \sum_{i=0}^{k} F_i = F_{k+2} \geq \phi^k$
      - The last two equalities follow by Facts 2 and 3.
- For any n node Fibonacci heap H, the max degree $D(n) = O(\log n)$.
- Proof Let x be any node in H, and let $k = x.deg$.
  - We have $n \geq size(x) \geq \phi^k$.
  - So $k \leq \lfloor \log_\phi n \rfloor$.