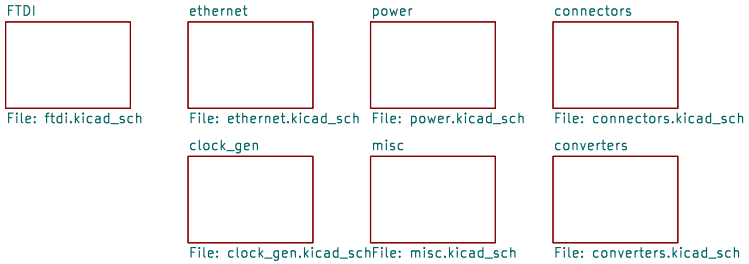

Design: Braulio Cancino Vera – braulio.cancino@noirlab.edu
NOIRLab

Sheet: /
File: adc_board_prot.kicad_sch

Title: 4 channel ADC Module

Size: A4	Date: 2025-06-14	**Rev: 0.1**
KiCad E.D.A. 9.0.0		Id: 1/26

b2b_jb1 — File: b2b_jb1.kicad_sch

b2b_jb2 — File: b2b_jb2.kicad_sch

b2b_jb3 — File: b2b_jb3.kicad_sch

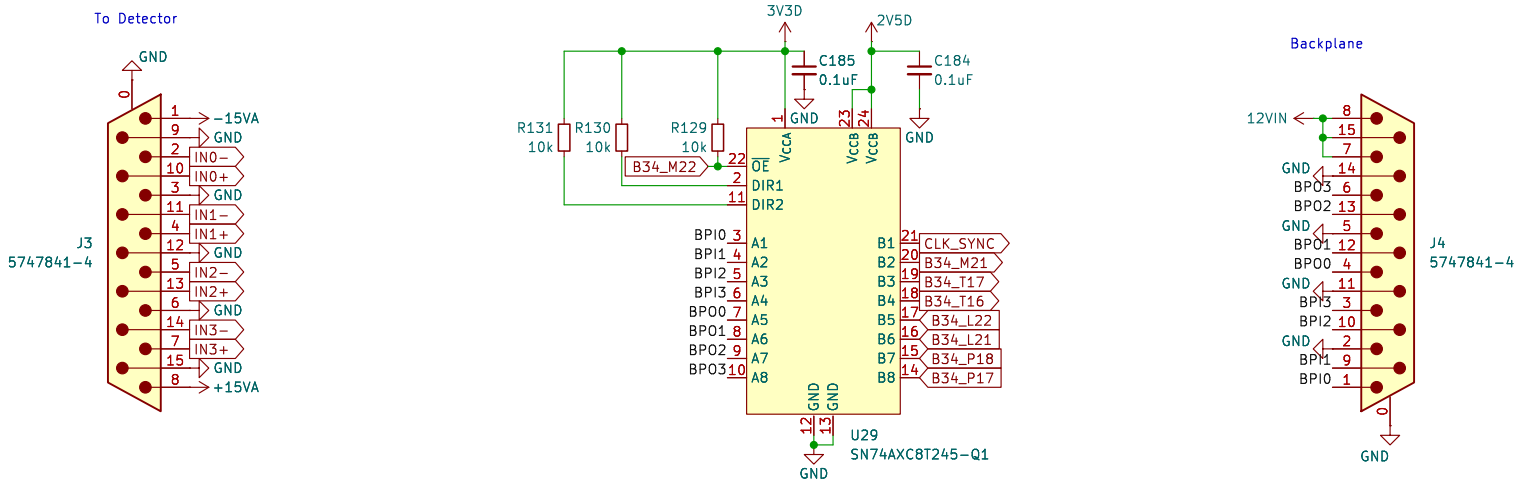

Design: Braulio Cancino Vera – braulio.cancino@noirlab.edu

NOIRLab

Sheet: /connectors/

File: connectors.kicad_sch

Title: 4 channel ADC Module

Size: A4	Date: 2025-06-14	**Rev: 0.1**
KiCad E.D.A. 9.0.0		Id: 2/26

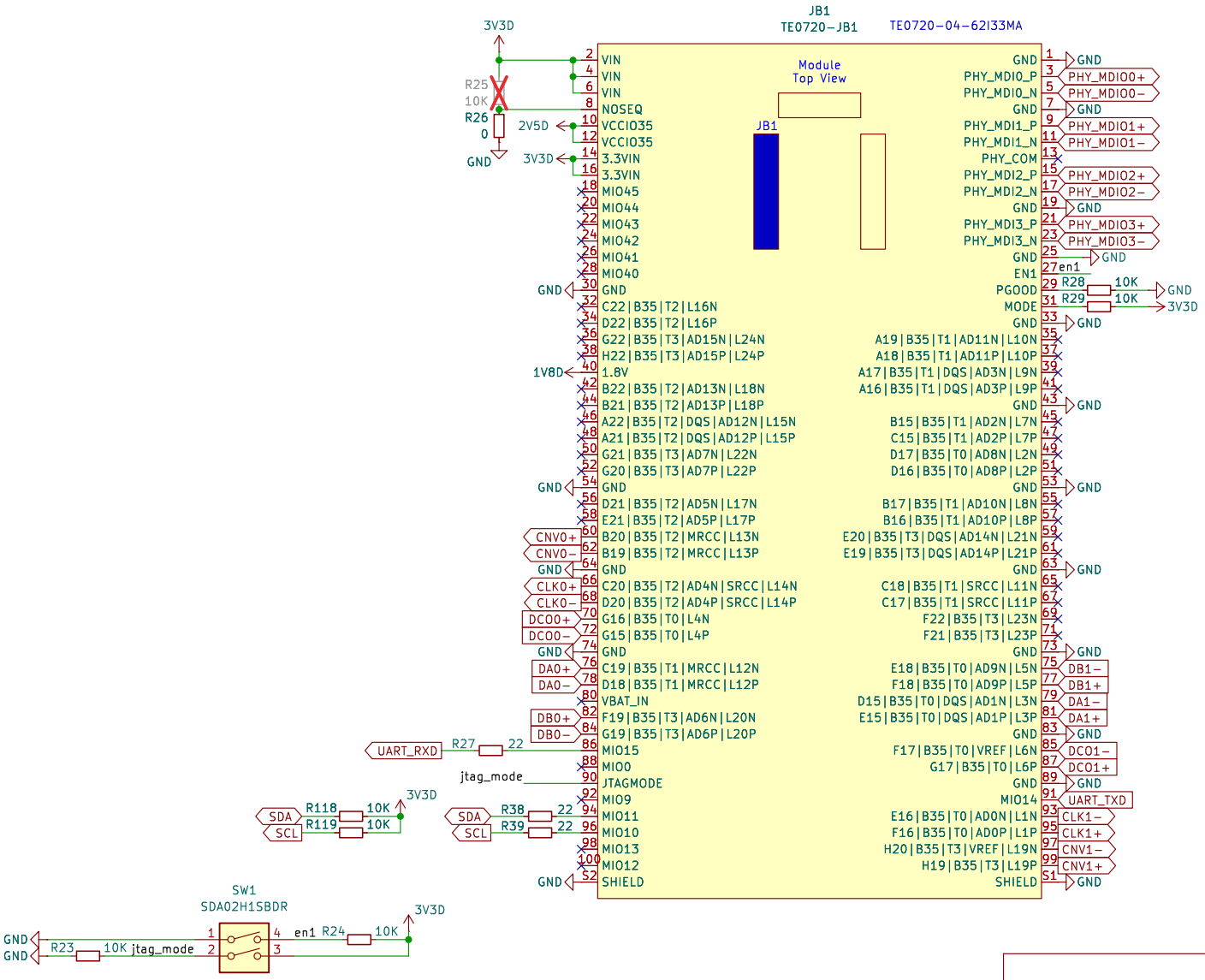

PGOOD	Output	Power good	Active high when all on-module power supplies are working properly.
MODE	Input	Boot mode	Force low for boot from the SD card. Latched at power-on only, not during soft reset!
EN1	Input	Power en	High enables the DC-DC converters and on-board supplies. Not used if NOSEQ is high.
NOSEQ	Input	Power seq	Forces the 1.0V and 1.8V DC-DC converters always ON when high.
JTAGMODE	Input	JTAG select	Keep low for FPGA JTAG access.

Design: Braulio Cancino Vera – braulio.cancino@noirlab.edu
NOIRLab

Sheet: /connectors/b2b_jb1/
File: b2b_jb1.kicad_sch

Title: 4 channel ADC Module

Size: A4	Date: 2025-06-14	**Rev: 0.1**
KiCad E.D.A. 9.0.0		Id: 3/26

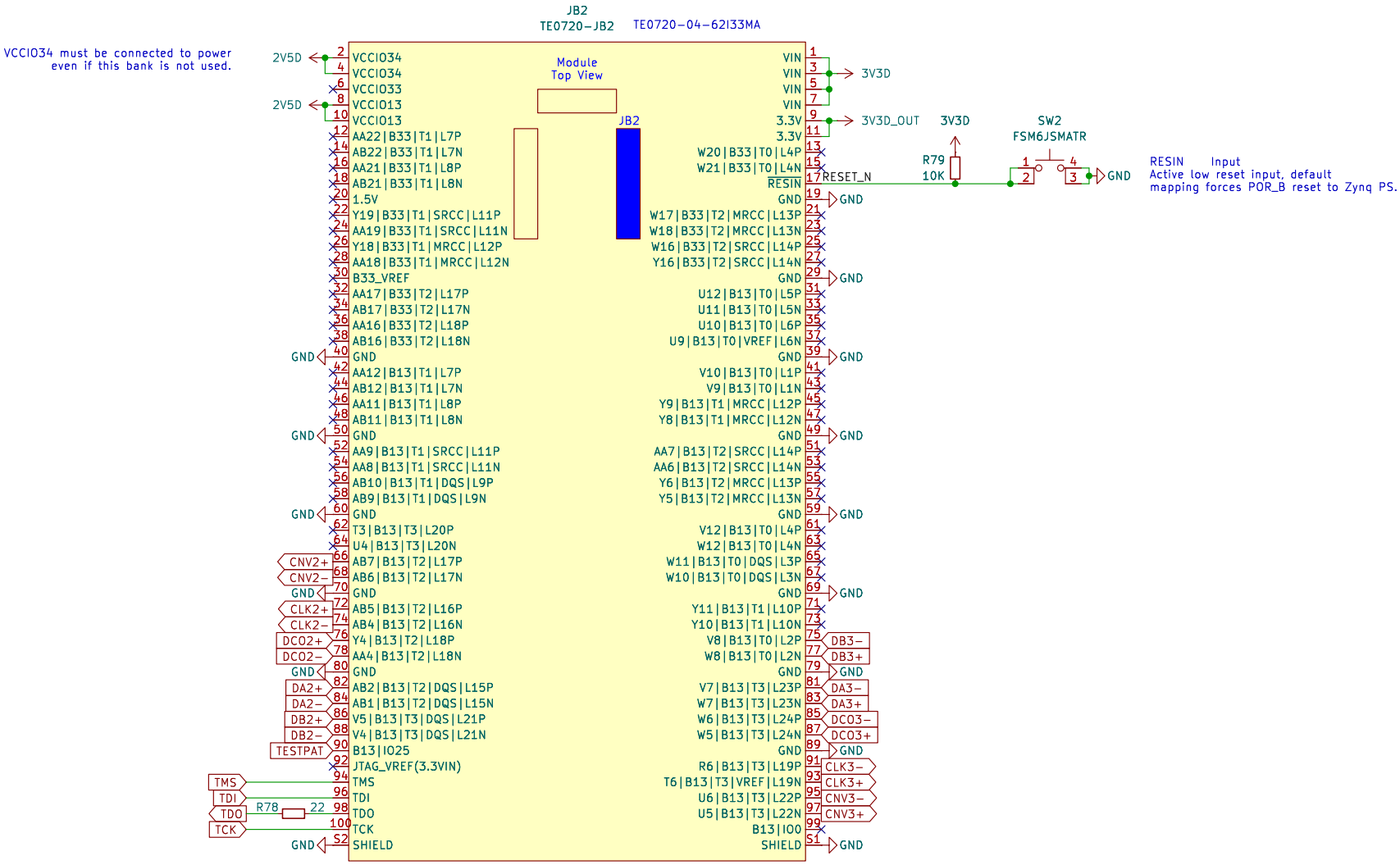

Design: Braulio Cancino Vera – braulio.cancino@noirlab.edu
NOIRLab

Sheet: /connectors/b2b_jb2/
File: b2b_jb2.kicad_sch

Title: 4 channel ADC Module

Size: A4	Date: 2025-06-14	**Rev: 0.1**
KiCad E.D.A. 9.0.0		Id: 4/26

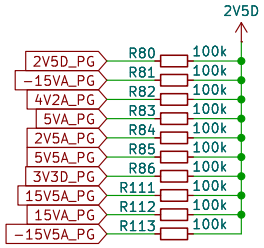

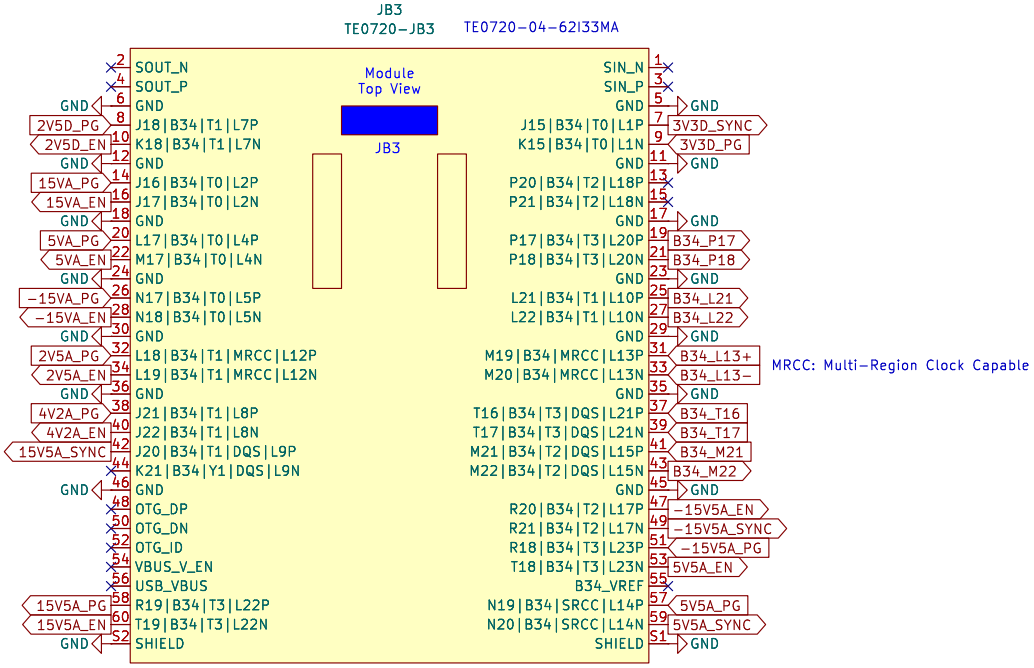

Design: Braulio Cancino Vera – braulio.cancino@noirlab.edu
NOIRLab

Sheet: /connectors/b2b_jb3/
File: b2b_jb3.kicad_sch

Title: 4 channel ADC Module

Size: A4	Date: 2025−06−14	**Rev: 0.1**
KiCad E.D.A. 9.0.0		Id: 5/26

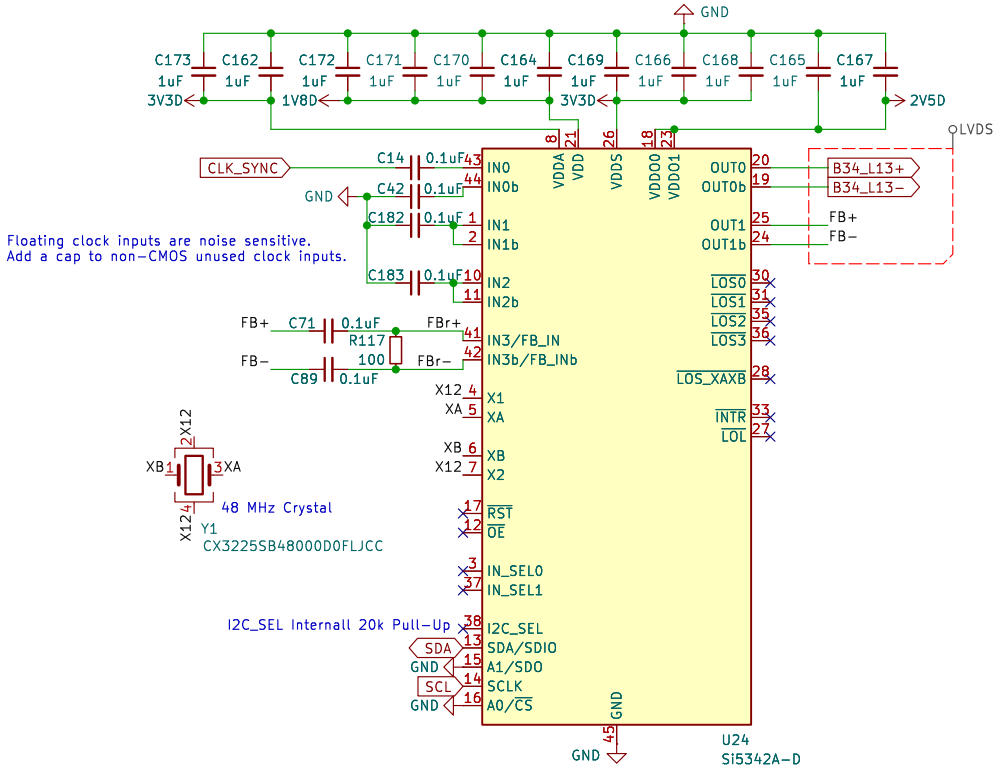

Design: Braulio Cancino Vera – braulio.cancino@noirlab.edu
NOIRLab

Sheet: /clock_gen/
File: clock_gen.kicad_sch

Title: 4 channel ADC Module

Size: A4	Date: 2025-06-14	**Rev: 0.1**
KiCad E.D.A. 9.0.0		Id: 6/26

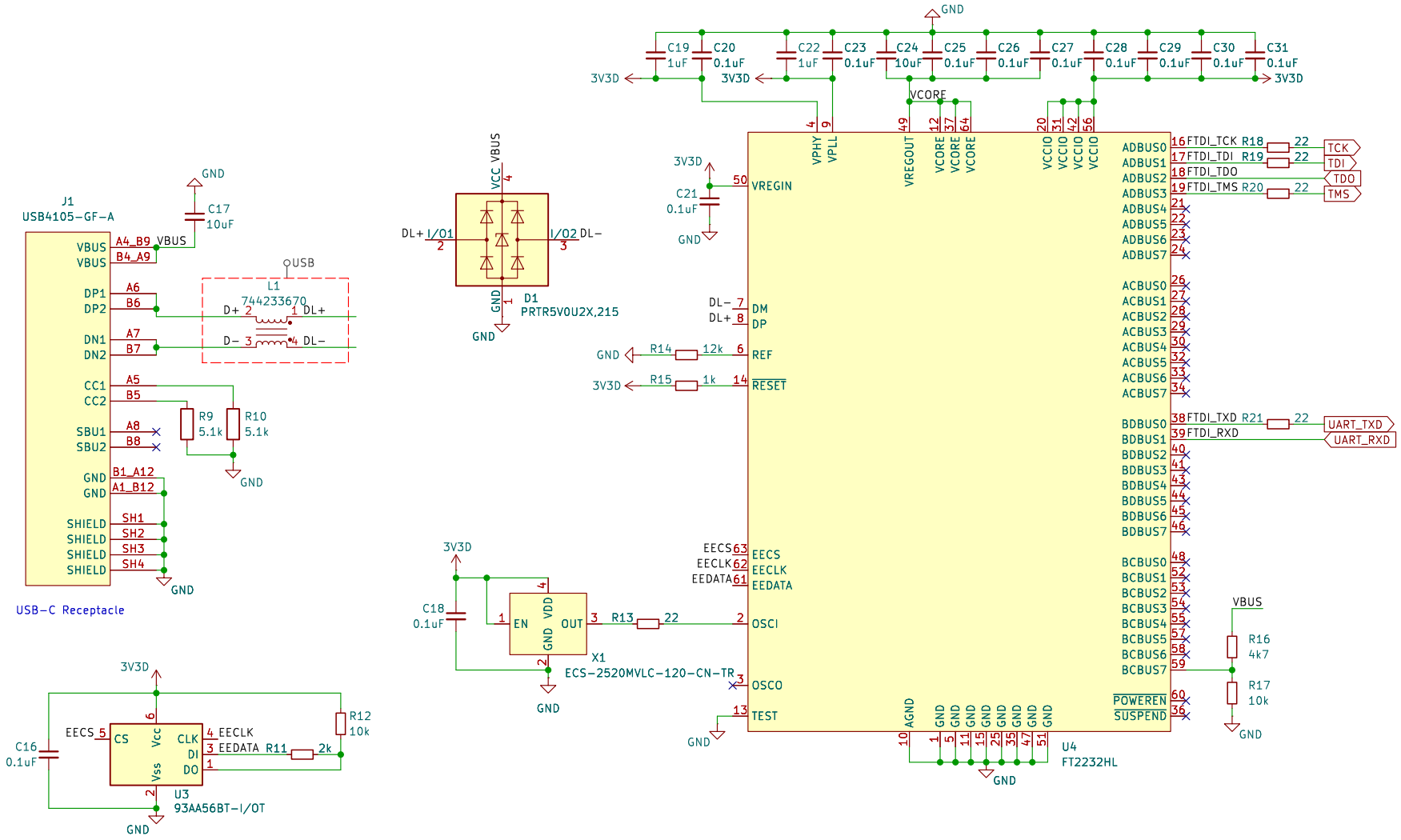

Design: Braulio Cancino Vera – braulio.cancino@noirlab.edu

NOIRLab

Sheet: /FTDI/

File: ftdi.kicad_sch

Title: 4 channel ADC Module

Size: A4	Date: 2025-06-14	**Rev: 0.1**
KiCad E.D.A. 9.0.0		Id: 7/26

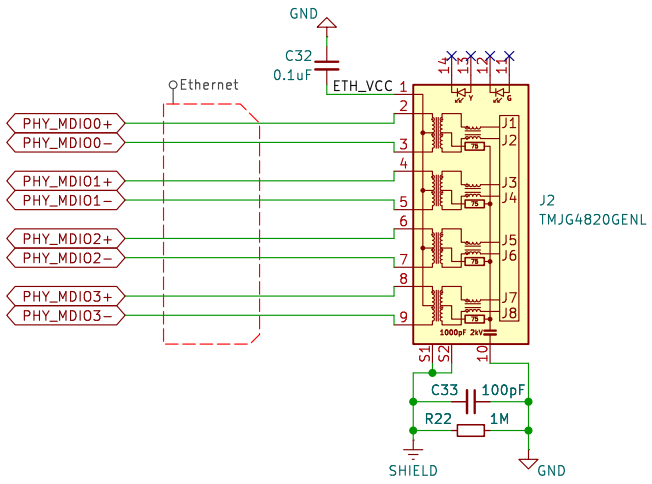

Design: Braulio Cancino Vera – braulio.cancino@noirlab.edu
NOIRLab

Sheet: /ethernet/
File: ethernet.kicad_sch

Title: 4 channel ADC Module

Size: A4	Date: 2025-06-14	**Rev: 0.1**
KiCad E.D.A. 9.0.0		Id: 8/26

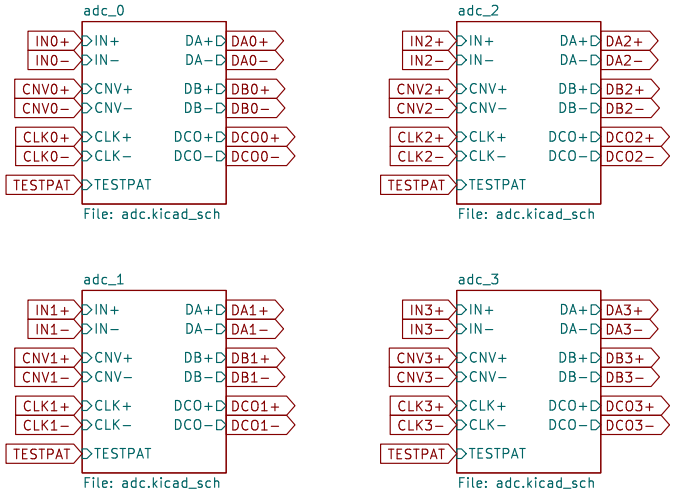

Design: Braulio Cancino Vera – braulio.cancino@noirlab.edu
NOIRLab

Sheet: /converters/
File: converters.kicad_sch

Title: 4 channel ADC Module

Size: A4	Date: 2025-06-14	**Rev: 0.1**
KiCad E.D.A. 9.0.0		Id: 9/26

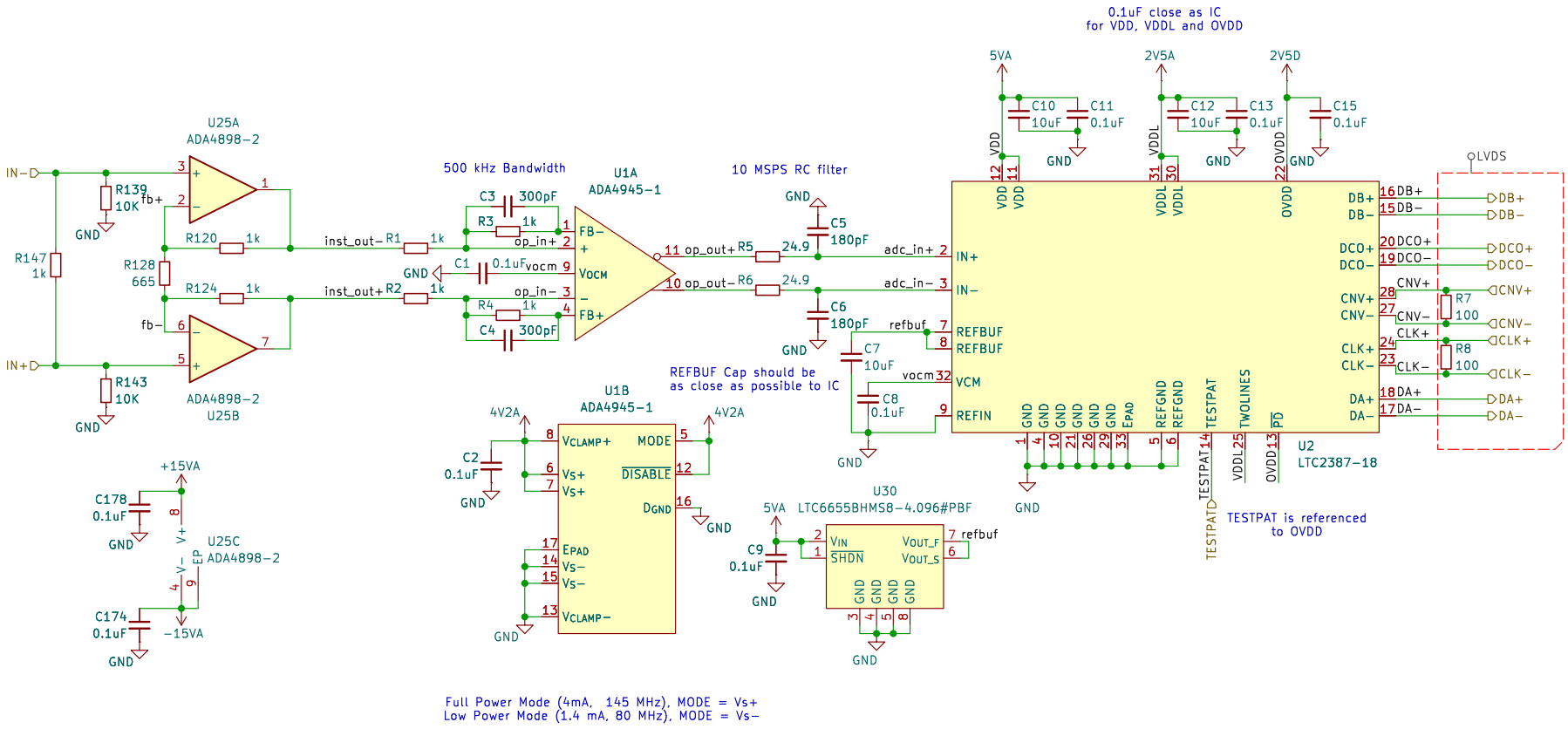

Full Power Mode (4mA, 145 MHz), MODE = Vs+
Low Power Mode (1.4 mA, 80 MHz), MODE = Vs-

Design: Braulio Cancino Vera – braulio.cancino@noirlab.edu
NOIRLab

Sheet: /converters/adc_0/
File: adc.kicad_sch

Title: 4 channel ADC Module

Size: A4	Date: 2025-06-14	**Rev: 0.1**
KiCad E.D.A. 9.0.0		Id: 10/26

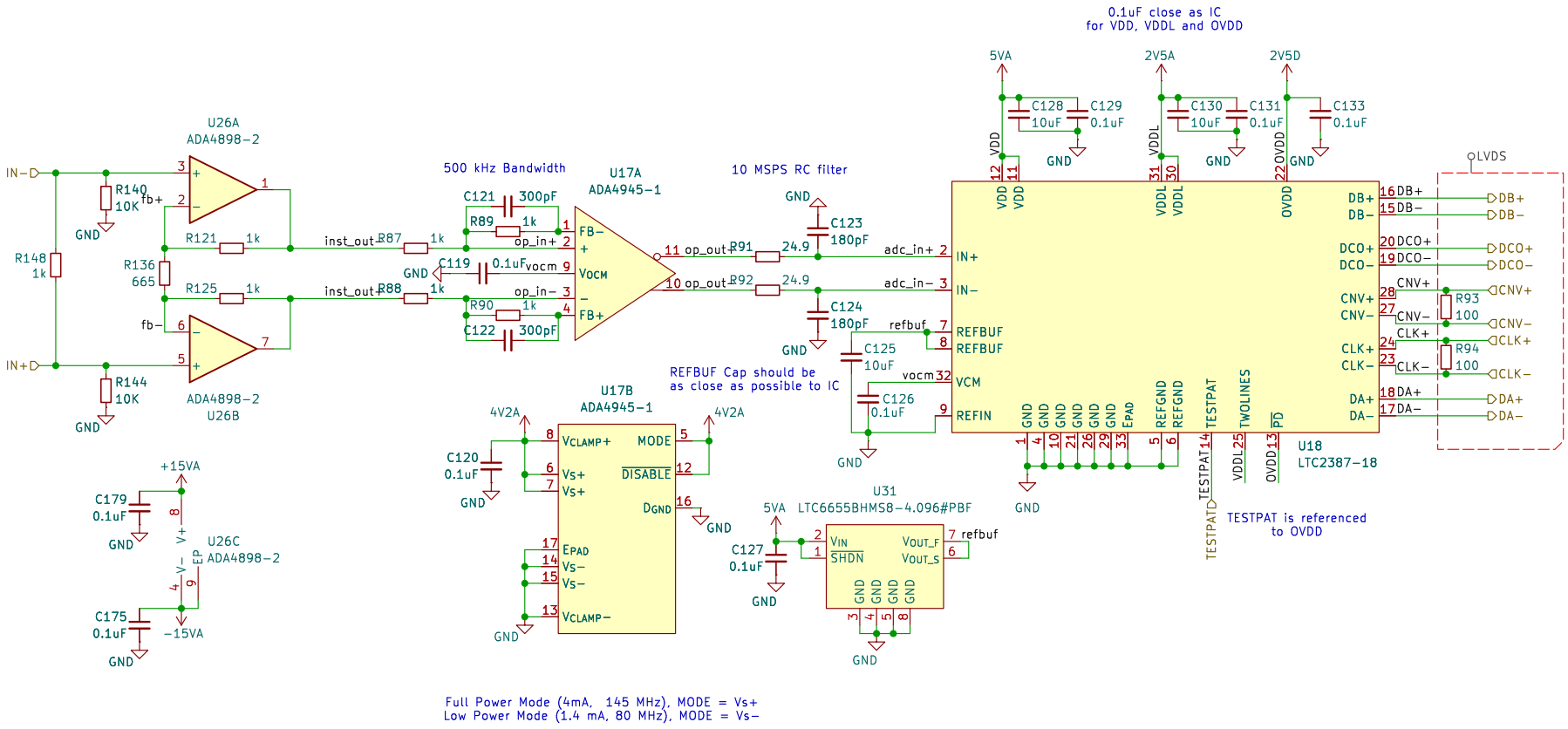

Design: Braulio Cancino Vera – braulio.cancino@noirlab.edu
NOIRLab

Sheet: /converters/adc_1/
File: adc.kicad_sch

Title: 4 channel ADC Module

Size: A4	Date: 2025-06-14	**Rev: 0.1**
KiCad E.D.A. 9.0.0		Id: 11/26

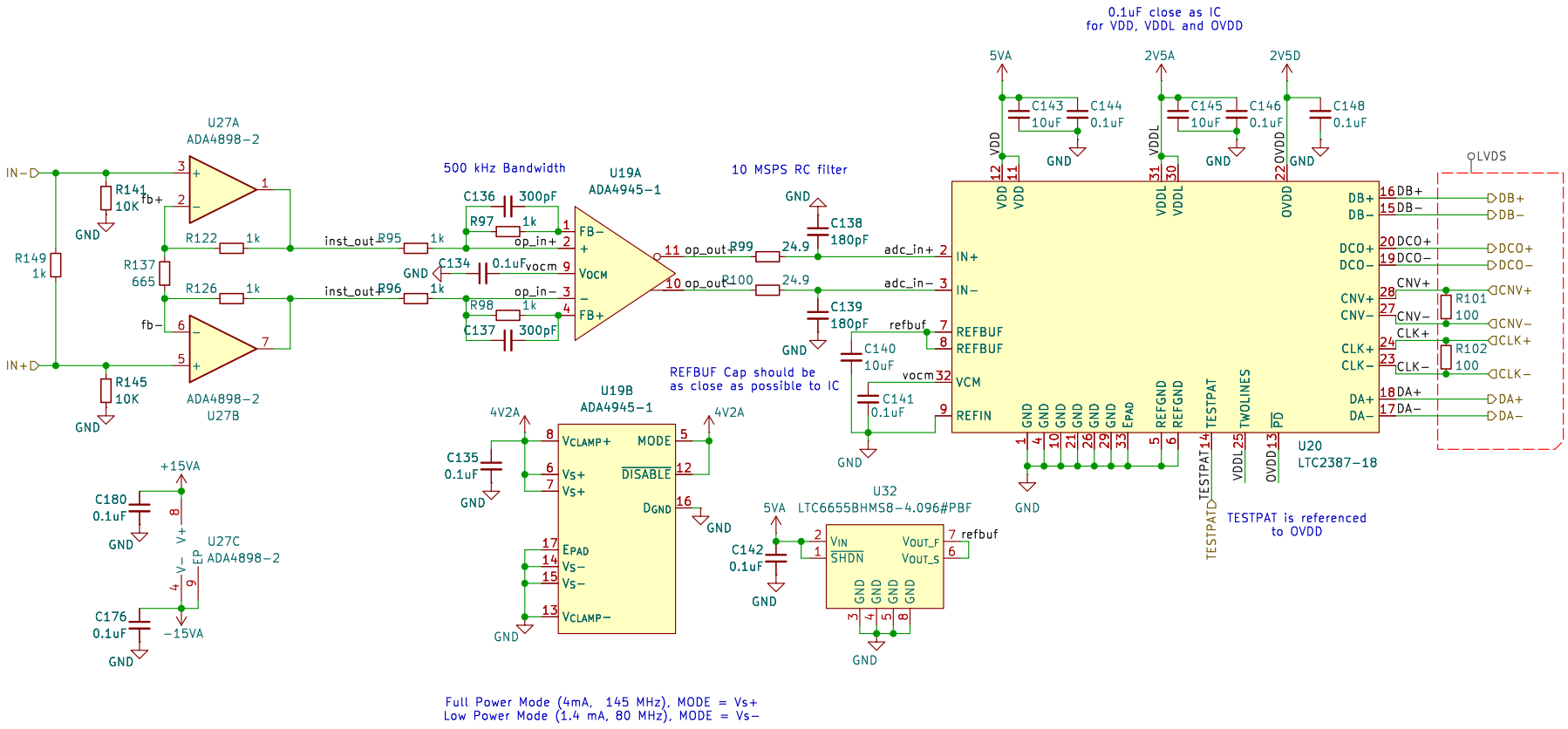

Design: Braulio Cancino Vera – braulio.cancino@noirlab.edu
NOIRLab

Sheet: /converters/adc_2/
File: adc.kicad_sch

Title: 4 channel ADC Module

Size: A4	Date: 2025-06-14	**Rev: 0.1**
KiCad E.D.A. 9.0.0		Id: 12/26

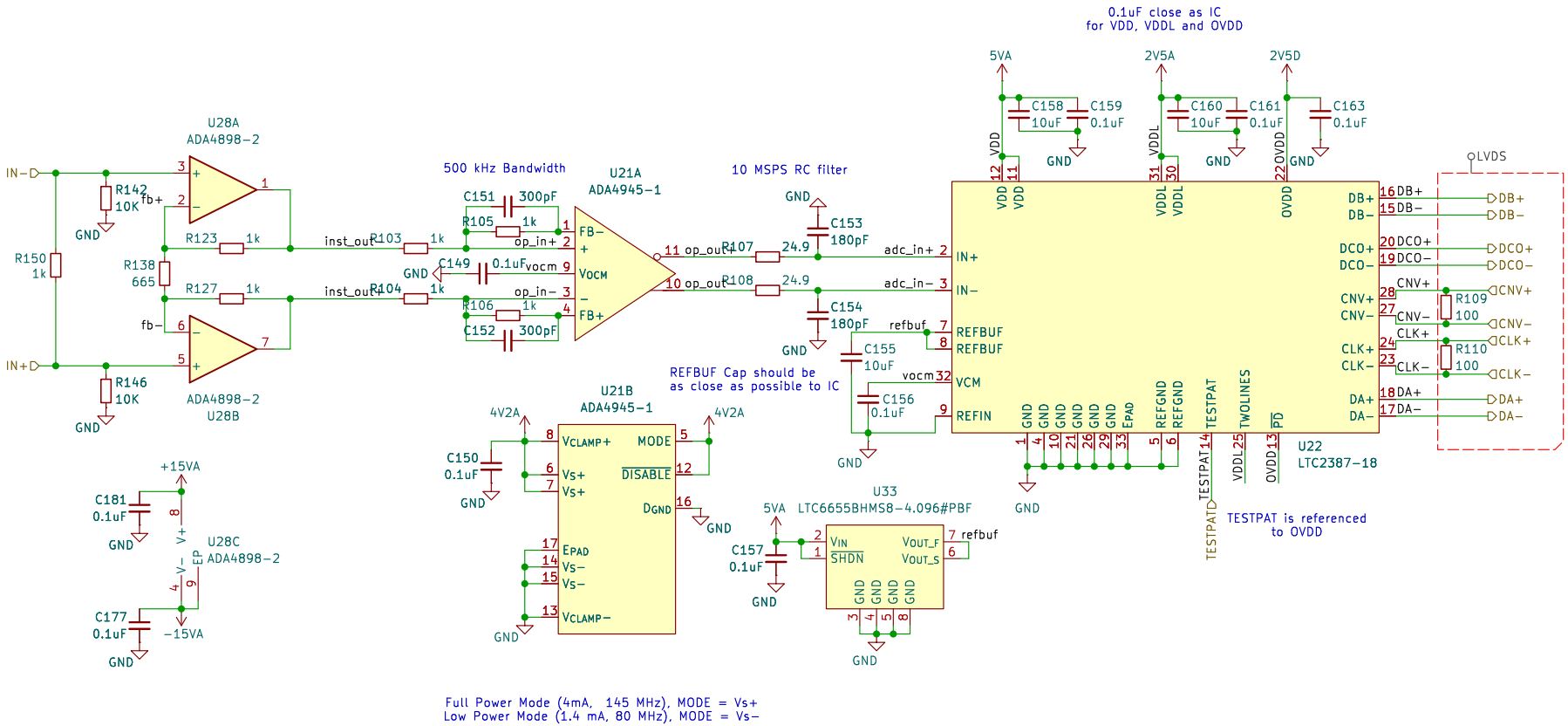

Design: Braulio Cancino Vera – braulio.cancino@noirlab.edu
NOIRLab

Sheet: /converters/adc_3/
File: adc.kicad_sch

Title: 4 channel ADC Module

Size: A4	Date: 2025-06-14	**Rev: 0.1**
KiCad E.D.A. 9.0.0		Id: 13/26

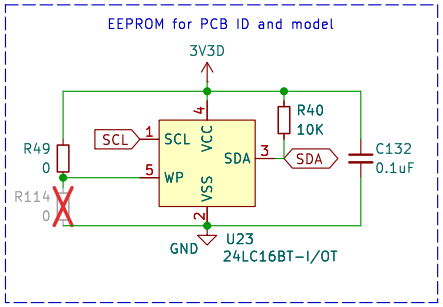

Design: Braulio Cancino Vera – braulio.cancino@noirlab.edu
NOIRLab

Sheet: /misc/
File: misc.kicad_sch

Title: 4 channel ADC Module

Size: A4	Date: 2025-06-14	**Rev: 0.1**
KiCad E.D.A. 9.0.0		Id: 14/26

12V Input Protection

12VIN

File: power_12vin.kicad_sch

DC-DC Converters

3V3D

File: power_3v3d.kicad_sch

5V5A

File: power_5v5a.kicad_sch

+15V5A

File: power_p15v5a.kicad_sch

−15V5A

File: power_n15v5a.kicad_sch

LDO

5VA

File: power_5va.kicad_sch

2V5A

File: power_2v5a.kicad_sch

2V5D

File: power_2v5d.kicad_sch

4V2A

File: power_4v2a.kicad_sch

+15VA

File: power_p15va.kicad_sch

−15VA

File: power_n15va.kicad_sch

Design: Braulio Cancino Vera – braulio.cancino@noirlab.edu
NOIRLab

Sheet: /power/
File: power.kicad_sch

Title: 4 channel ADC Module

Size: A4	Date: 2025-06-14	**Rev: 0.1**
KiCad E.D.A. 9.0.0		Id: 15/26

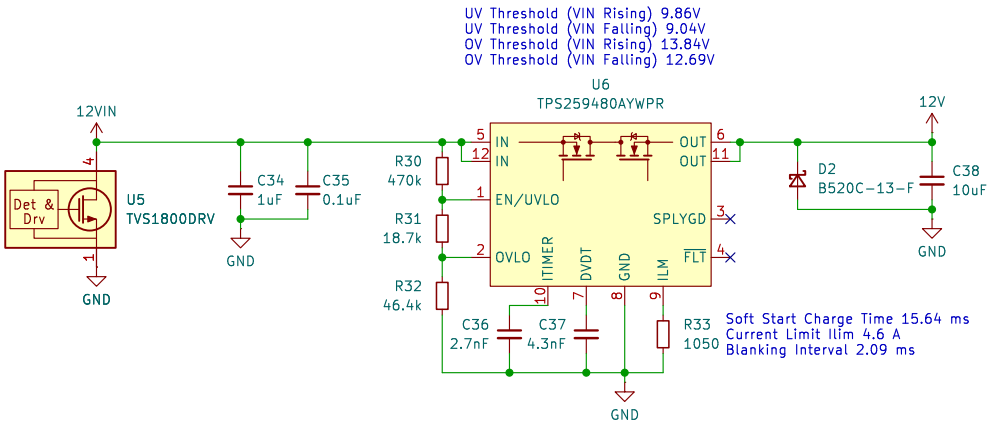

Design: Braulio Cancino Vera – braulio.cancino@noirlab.edu
NOIRLab

Sheet: /power/12VIN/
File: power_12vin.kicad_sch

Title: 4 channel ADC Module

Size: A4	Date: 2025-06-14	**Rev: 0.1**
KiCad E.D.A. 9.0.0		Id: 16/26

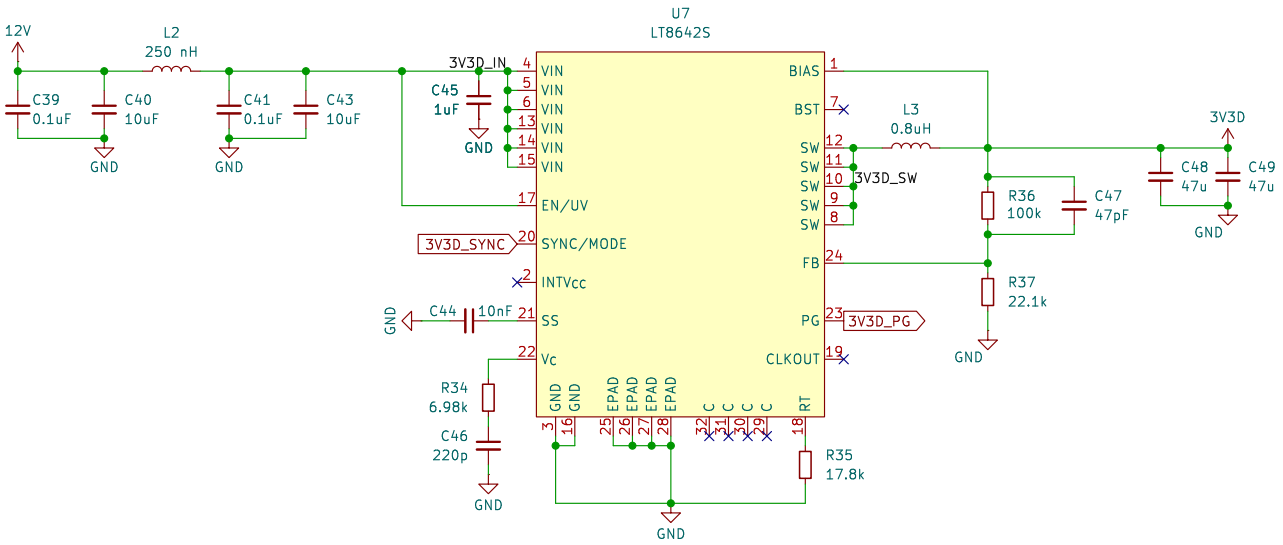

Design: Braulio Cancino Vera – braulio.cancino@noirlab.edu
NOIRLab

Sheet: /power/3V3D/
File: power_3v3d.kicad_sch

Title: 4 channel ADC Module

Size: A4	Date: 2025-06-14	**Rev: 0.1**
KiCad E.D.A. 9.0.0		Id: 17/26

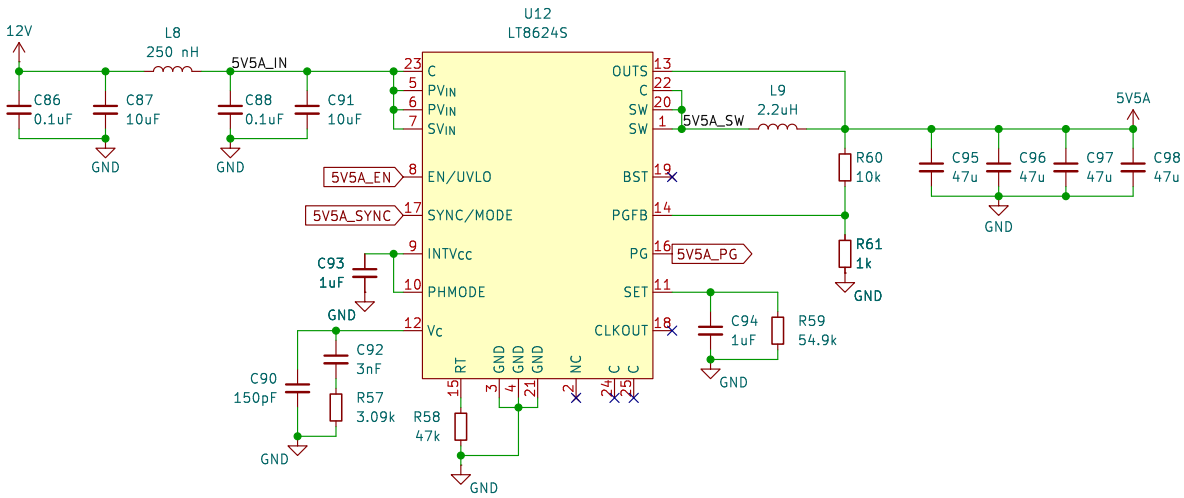

Design: Braulio Cancino Vera – braulio.cancino@noirlab.edu
NOIRLab

Sheet: /power/5V5A/
File: power_5v5a.kicad_sch

Title: 4 channel ADC Module

Size: A4	Date: 2025-06-14	**Rev: 0.1**
KiCad E.D.A. 9.0.0		Id: 18/26

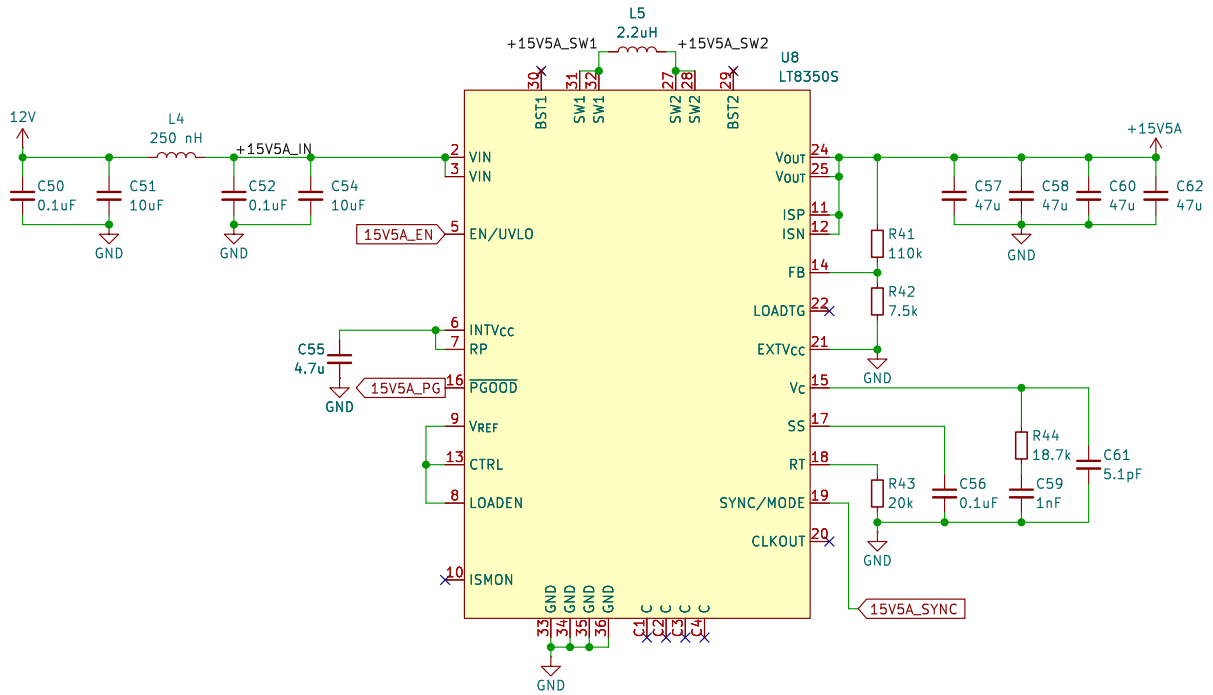

Design: Braulio Cancino Vera – braulio.cancino@noirlab.edu
NOIRLab

Sheet: /power/+15V5A/
File: power_p15v5a.kicad_sch

Title: 4 channel ADC Module

Size: A4	Date: 2025-06-14	**Rev: 0.1**
KiCad E.D.A. 9.0.0		Id: 19/26

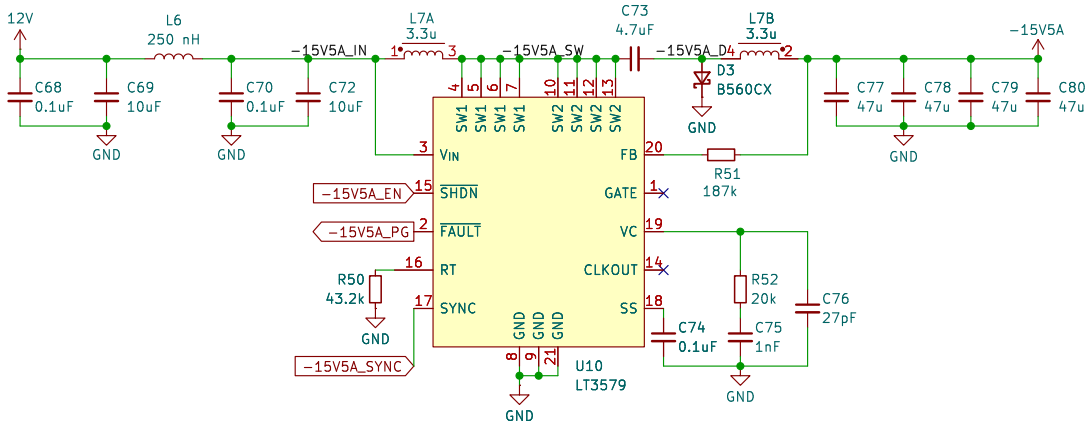

Design: Braulio Cancino Vera – braulio.cancino@noirlab.edu
NOIRLab

Sheet: /power/-15V5A/
File: power_n15v5a.kicad_sch

Title: 4 channel ADC Module

Size: A4	Date: 2025-06-14	**Rev: 0.1**
KiCad E.D.A. 9.0.0		Id: 20/26

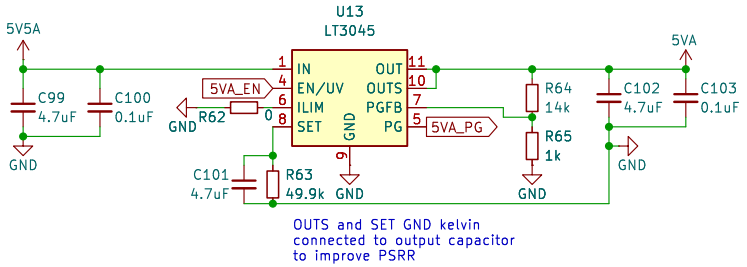

Design: Braulio Cancino Vera – braulio.cancino@noirlab.edu
NOIRLab

Sheet: /power/5VA/
File: power_5va.kicad_sch

Title: 4 channel ADC Module

Size: A4	Date: 2025-06-14	**Rev: 0.1**
KiCad E.D.A. 9.0.0		Id: 21/26

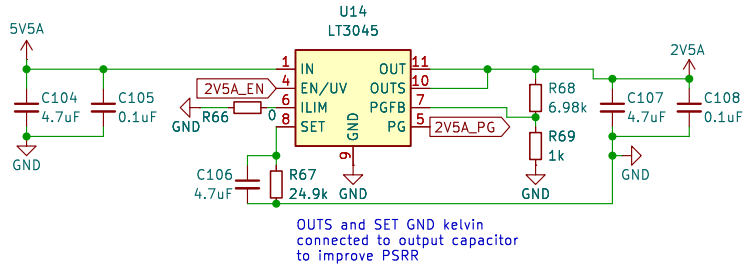

Design: Braulio Cancino Vera – braulio.cancino@noirlab.edu
NOIRLab

Sheet: /power/2V5A/
File: power_2v5a.kicad_sch

Title: 4 channel ADC Module

Size: A4	Date: 2025-06-14	**Rev: 0.1**
KiCad E.D.A. 9.0.0		Id: 22/26

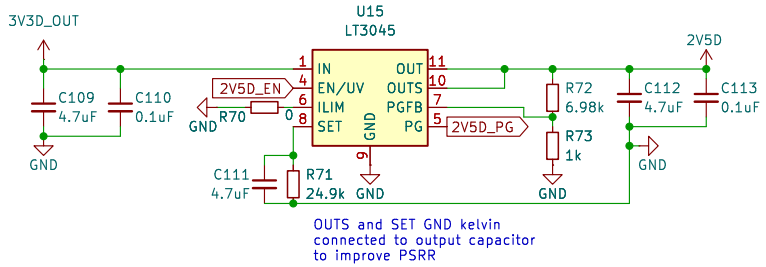

Design: Braulio Cancino Vera – braulio.cancino@noirlab.edu
NOIRLab

Sheet: /power/2V5D/
File: power_2v5d.kicad_sch

Title: 4 channel ADC Module

Size: A4	Date: 2025-06-14	**Rev: 0.1**
KiCad E.D.A. 9.0.0		Id: 23/26

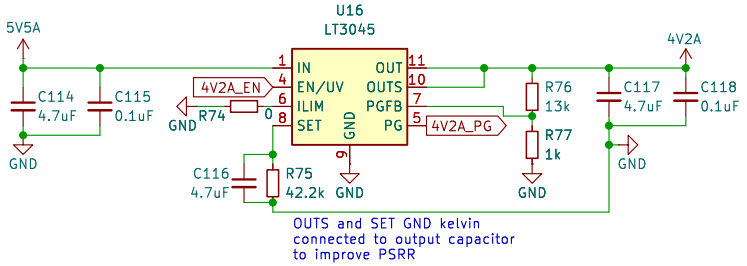

Design: Braulio Cancino Vera – braulio.cancino@noirlab.edu
NOIRLab

Sheet: /power/4V2A/
File: power_4v2a.kicad_sch

Title: 4 channel ADC Module

Size: A4	Date: 2025-06-14	**Rev: 0.1**
KiCad E.D.A. 9.0.0		Id: 24/26

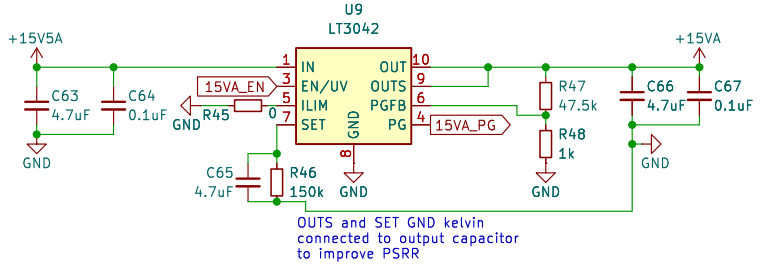

Design: Braulio Cancino Vera – braulio.cancino@noirlab.edu
NOIRLab

Sheet: /power/+15VA/
File: power_p15va.kicad_sch

Title: 4 channel ADC Module

Size: A4	Date: 2025-06-14	**Rev: 0.1**
KiCad E.D.A. 9.0.0		Id: 25/26

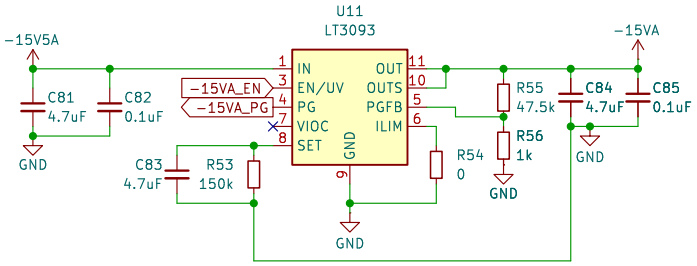

Design: Braulio Cancino Vera – braulio.cancino@noirlab.edu
NOIRLab

Sheet: /power/−15VA/
File: power_n15va.kicad_sch

Title: 4 channel ADC Module

Size: A4	Date: 2025−06−14	**Rev: 0.1**
KiCad E.D.A. 9.0.0		Id: 26/26