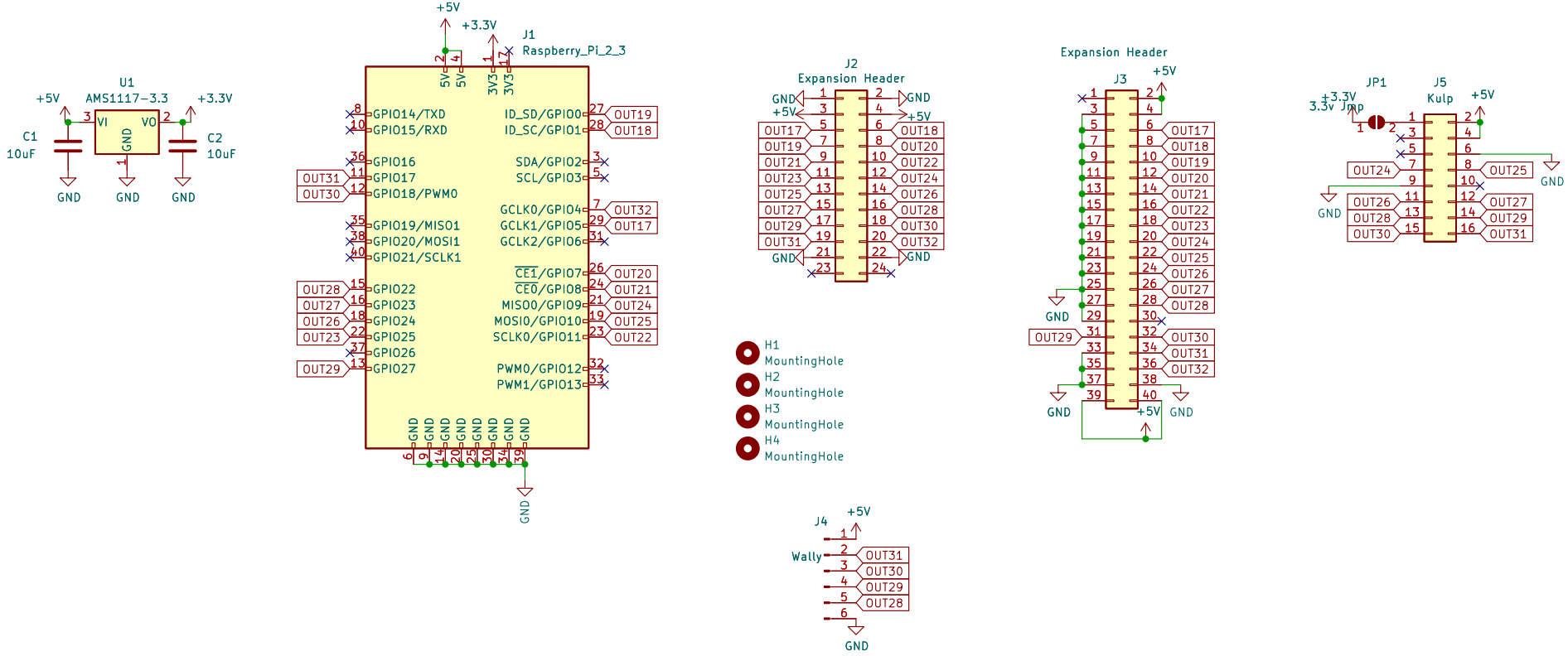

Scott Hanson

Sheet: /

File: Input_Adapter.kicad_sch

Title: Input2Expansion

Size: A4	Date: 2022-09-25	Rev: v4
KiCad E.D.A. kicad (6.0.7)		Id: 1/1