Electric circuits

—

The notions of power

Bertrand Cornélusse

Université de Liège

2016

Previous lectures

- Voltage, current, energy, power, link with electromagnetism
- Ideal (in)dependent voltage and current sources
- Kirchhoff laws
- Simple resistive circuits
- Techniques for circuit analysis
- Thévenin and Norton equivalents
- Inductance, capacitance and mutual inductance
- Sinusoidal steady-state analysis

References used for this lecture

Section 1.6, chapters 10 and 11 of

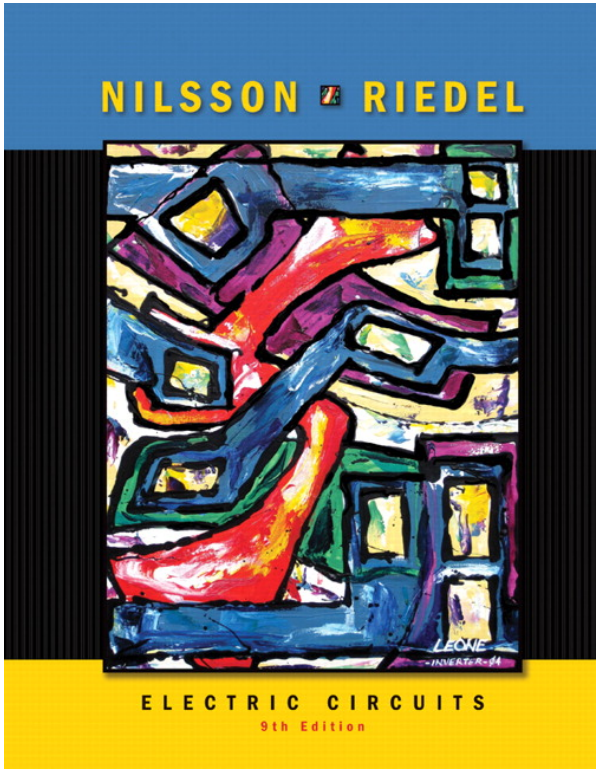

References used for this lecture

Section 1.6, chapters 10 and 11 of

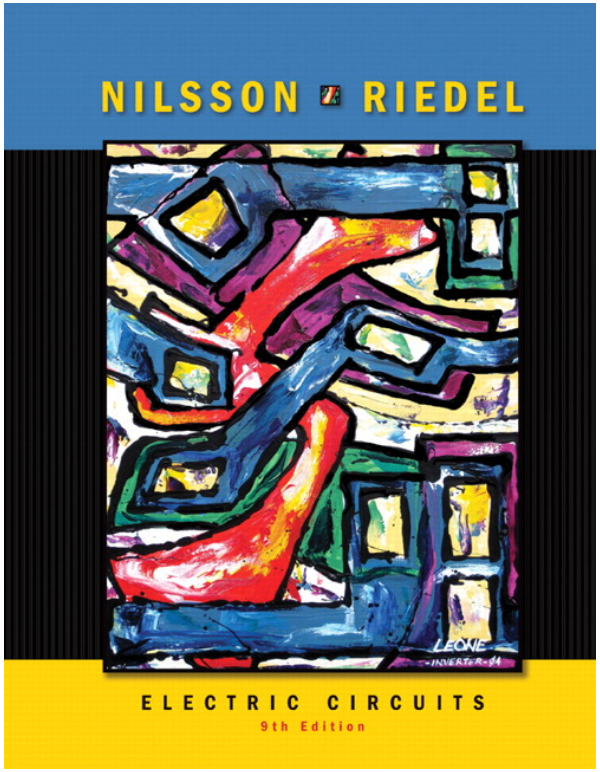

Course notes of Thierry Van Custem, *Powers in the sinusoidal steady state* and *Balanced three-phase systems and operation*, `http://www.montefiore.ulg.ac.be/~vct/courses.html`

Notation used in these slides is compliant with this reference! It is only slightly different from the textbook.

References used for this lecture

Section 1.6, chapters 10 and 11 of

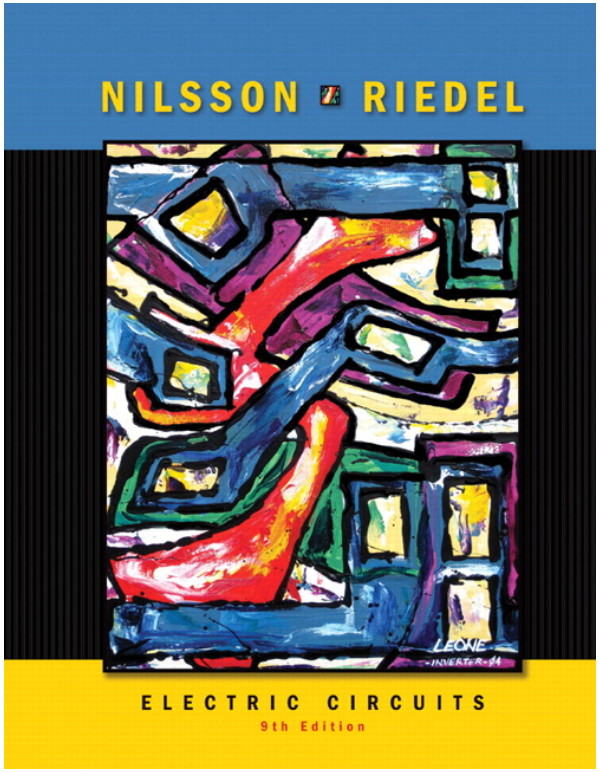

Course notes of Thierry Van Custem, *Powers in the sinusoidal steady state* and *Balanced three-phase systems and operation*, `http://www.montefiore.ulg.ac.be/~vct/courses.html`

Notation used in these slides is compliant with this reference! It is only slightly different from the textbook.

and Wikipedia: 'AC power'

Content of the lecture

Introduction

Definitions and conventions

The notions of power in an AC system

Summary

Outline

Introduction

Definitions and conventions

The notions of power in an AC system

Summary

Introduction: an e-bike

You want to buy an electric bike. You already decided the type, the color, etc. How do you decide on the electrical part? What are the typical options you could have?

Introduction: an e-bike

You want to buy an electric bike. You already decided the type, the color, etc. How do you decide on the electrical part? What are the typical options you could have?

- Hints: the size of the battery, the power of the motor.

Introduction: an e-bike

You want to buy an electric bike. You already decided the type, the color, etc. How do you decide on the electrical part? What are the typical options you could have?

- Hints: the size of the battery, the power of the motor.
- What does the battery store?

Introduction: an e-bike

You want to buy an electric bike. You already decided the type, the color, etc. How do you decide on the electrical part? What are the typical options you could have?

- Hints: the size of the battery, the power of the motor.
- What does the battery store? Some **energy**, measured in joules (J) or watt-hours (Wh): $1Wh = 3600J$.

Introduction: an e-bike

You want to buy an electric bike. You already decided the type, the color, etc. How do you decide on the electrical part? What are the typical options you could have?

- Hints: the size of the battery, the power of the motor.
- What does the battery store? Some **energy**, measured in joules (J) or watt-hours (Wh): $1Wh = 3600J$.
- How fast is the energy delivered?

Introduction: an e-bike

You want to buy an electric bike. You already decided the type, the color, etc. How do you decide on the electrical part? What are the typical options you could have?

- Hints: the size of the battery, the power of the motor.
- What does the battery store? Some **energy**, measured in joules (J) or watt-hours (Wh): $1Wh = 3600J$.
- How fast is the energy delivered? It depends on the **power** of the motor, measured in watts (W)

Introduction: an e-bike

You want to buy an electric bike. You already decided the type, the color, etc. How do you decide on the electrical part? What are the typical options you could have?

- Hints: the size of the battery, the power of the motor.
- What does the battery store? Some **energy**, measured in joules (J) or watt-hours (Wh): $1Wh = 3600J$.
- How fast is the energy delivered? It depends on the **power** of the motor, measured in watts (W)

Good to know: an e-bike has a typical battery size of $500Wh$, and the power of the motor is $250W$.

Power definition

Power = rate of use of Energy = time derivative of Energy

Power = "effort" $\times$ "flow"

Examples:

Mechanical power	$=$	Force	$\times$	speed
Mechanical power	$=$	Torque	$\times$	angular velocity
Mechanical power	$\approx$	Pressure[1]	$\times$	flow
Accoustic power	$\approx$	Sound pressure	$\times$	particle velocity
Electrical power	$=$	Electric tension (voltage)	$\times$	current

[1] Actually, pressure $\times$ surface

Outline

Introduction

Definitions and conventions

The notions of power in an AC system

Summary

One-port representations and conventions for voltage and current

A One-port is represented as

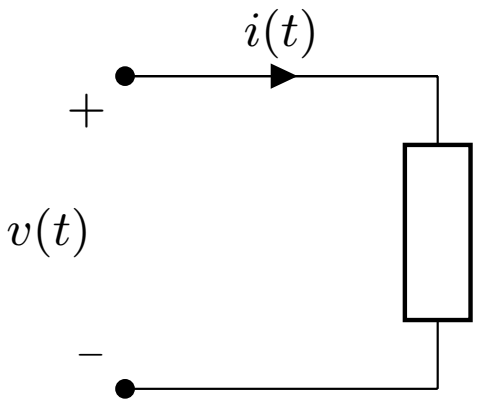

American style representation

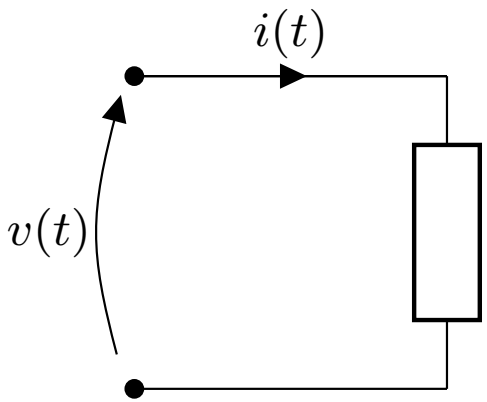

European style representation

The voltage $v(t)$ is:

the potential at the $+$ node minus the potential at the $-$ node.

the potential at the end of the arrow minus the potential at the start of the arrow.

The current $i(t)$ is counted positively in the direction of the arrow.

Motor and generator conventions and instantaneous power

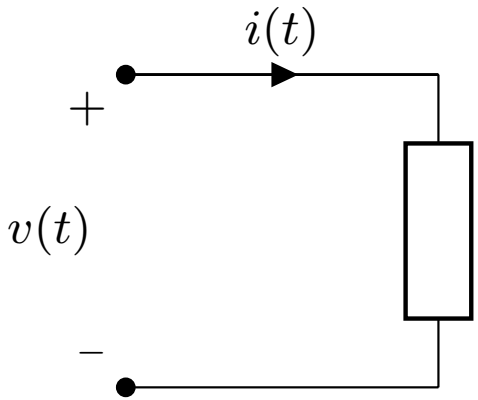

Motor convention, the current flows in the device.

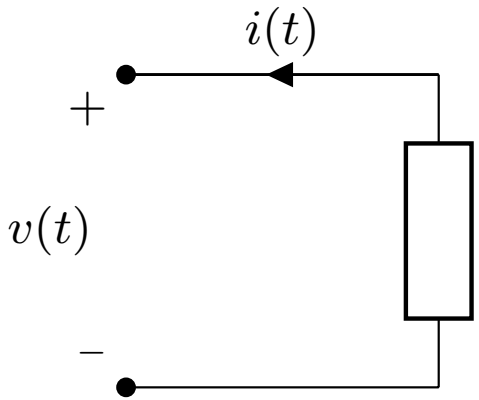

Generator convention, the current flows out of the device.

Instantaneous power

We adopt the <u>motor</u> convention. The instantaneous power <u>absorbed</u> by the one-port is

$$p(t) = v(t)i(t).$$

Remark: $p(t)$ can be negative. These are just conventions that determine which value corresponds to which physical behavior. Hence in case $p(t) < 0$ under the motor convention, the one-port actually generates power.

Outline

Introduction

Definitions and conventions

The notions of power in an AC system

Summary

Single-phase alternating current (AC) system

We are now in a system where electricity is produced by rotating generators and transmitted to consummers through an electrical network. Nowadays, this is most of the time achieved using alternating current. In this case, and considering a single conductor for now, the voltage and current are defined as

$$v(t) = \underbrace{\sqrt{2}\,\overbrace{V}^{\text{Effective value}}}_{\text{Amplitude}} \cos(\underbrace{\omega}_{\text{Angular frequency}}\, t + \theta) \qquad i(t) = \sqrt{2} I \cos(\omega t + \psi)$$

Example with $\theta = \pi/6$ and $\psi = \pi/3$.

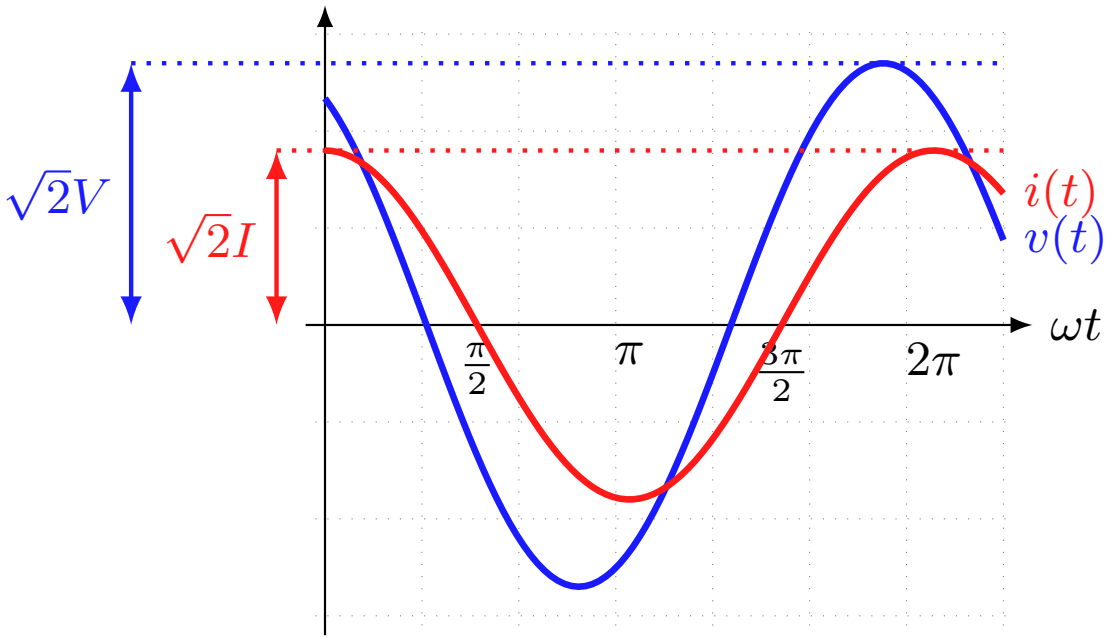

Active and reactive currents

$i(t)$ and $v(t)$ are not in phase because of capacitive and inductive elements of the circuit. Let us define

$$\phi = \theta - \psi$$

If the circuit is purely

- resistive: $\phi = 0$
- inductive: $\phi = \pi/2$
- capacitive: $\phi = -\pi/2$

We define the

- active current as the part of $i(t)$ in phase with the voltage
- reactive current as the part of $i(t)$ lagging of $\pi/2$

Important: $\cos\phi$ is called the power factor, we will see why later on.

Instantaneous power in a single phase AC system

Assume t is shifted by $\frac{\psi}{\omega}$. Then

$$\begin{aligned}
p(t) &= v(t)i(t) \\
&= 2VI\cos(\omega t + \phi)\cos(\omega t) \\
&= VI\left(\cos(\phi) + \cos(2\omega t + \phi)\right) \\
&= VI\cos(\phi) + VI\left(\cos(2\omega t)\cos(\phi) - \sin(2\omega t)\sin(\phi)\right) \\
&= \underbrace{VI\cos(\phi)}_{P} + VI\cos(\phi)\cos(2\omega t) - \underbrace{VI\sin(\phi)}_{Q}\sin(2\omega t)
\end{aligned}$$

Remember from trigonometry that:

- $\cos(a)\cos(b) = \cos(a-b) + \cos(a+b)$
- $\cos(a+b) = \cos(a)\cos(b) - \sin(a)\sin(b)$

Instantaneous power in a single phase AC system (...)

$$p(t) = P + P\cos(2\omega t) - Q\sin(2\omega t)$$

The instantaneous power is equal to a constant P plus a fluctuating power oscillating twice as fast as the voltage and the current.

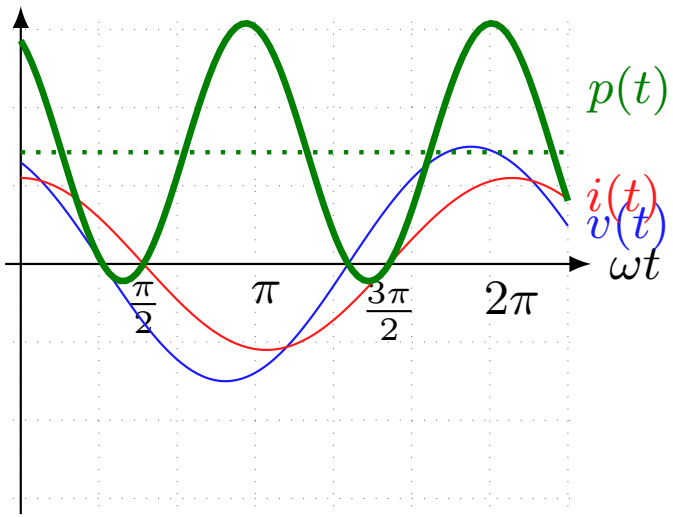

Active and reactive power

- P, the average, is the active power. It repesents the electrical energy which is converted in non-electrical energy. Unit: watt (W)
- Q is the reactive power. It represents the energy which is stored an released by capacitive and inductive elements of the circuit. Unit: volt-ampere reactive (var)

Special cases

Resistive circuit
$p(t) = P + P\cos(2\omega t)$

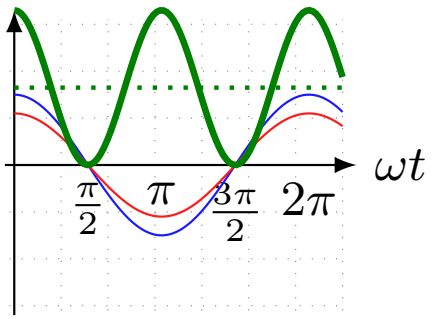

Capacitive circuit
$p(t) = Q\sin(2\omega t)$

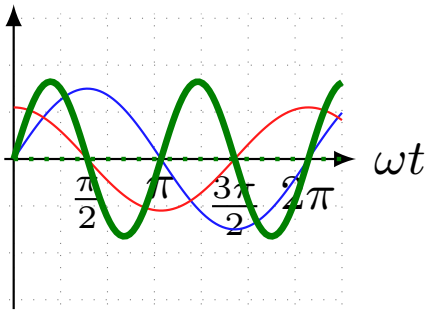

Inductive circuit
$p(t) = -Q\sin(2\omega t)$

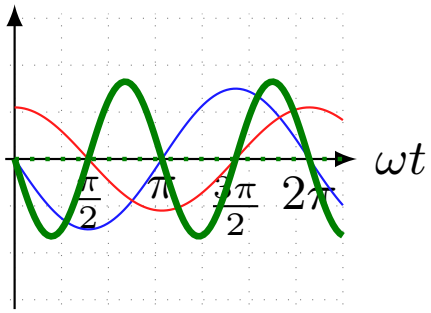

Effective value of a signal

Definition:
The effective value of a signal is its Root Mean Square (RMS) value. We can limit ourself to one period T to compute the RMS value if the signal is periodic

$$\textbf{RMS}(v(t)) = \sqrt{\frac{1}{T}\int_0^T v^2(t)dt}$$

Exercise:

- How are T and ω related?
- Show that $\textbf{RMS}(\sqrt{2}V\cos(\omega t + \theta)) = V$.

Physical meaning:
The effective value of a signal tells you how a signal compares to a constant signal: a signal with an effective value of V *"has the same effect than"* a constant signal of amplitude V. Example: power disipated in a resistor: in DC it is V^2/R, in AC as well: $P = V \times I\cos(0) = V \times V/R$.

Phasors and phasor diagram

Phasor

A phasor is a complex number that carries the information of the amplitude and phase of a sinusoidal function.

If we define $\bar{V} = Ve^{j\theta}$ and $\bar{I} = Ie^{j\psi}$, we can rewrite the voltage and the current as:

$$v(t) = \sqrt{2}\Re\left(\bar{V}e^{j\omega t}\right)$$
$$i(t) = \sqrt{2}\Re\left(\bar{I}e^{j\omega t}\right)$$

The phasors $\bar{V}$ and $\bar{I}$ are represented in the phasor diagram at time $t = 0$. As time goes, the two phasors rotate counterclockwise at speed ω.

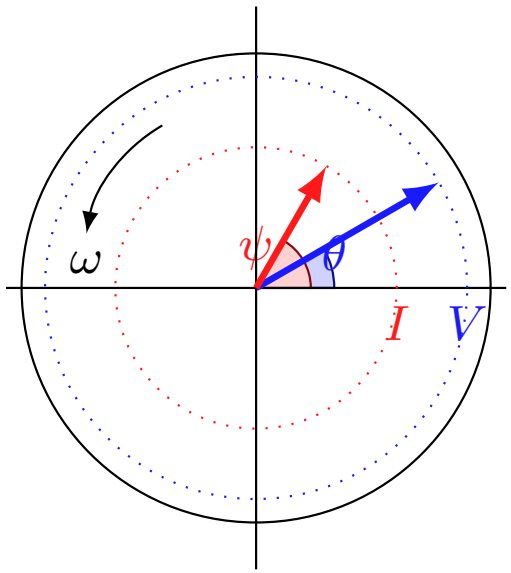

Phasor v.s. time diagram

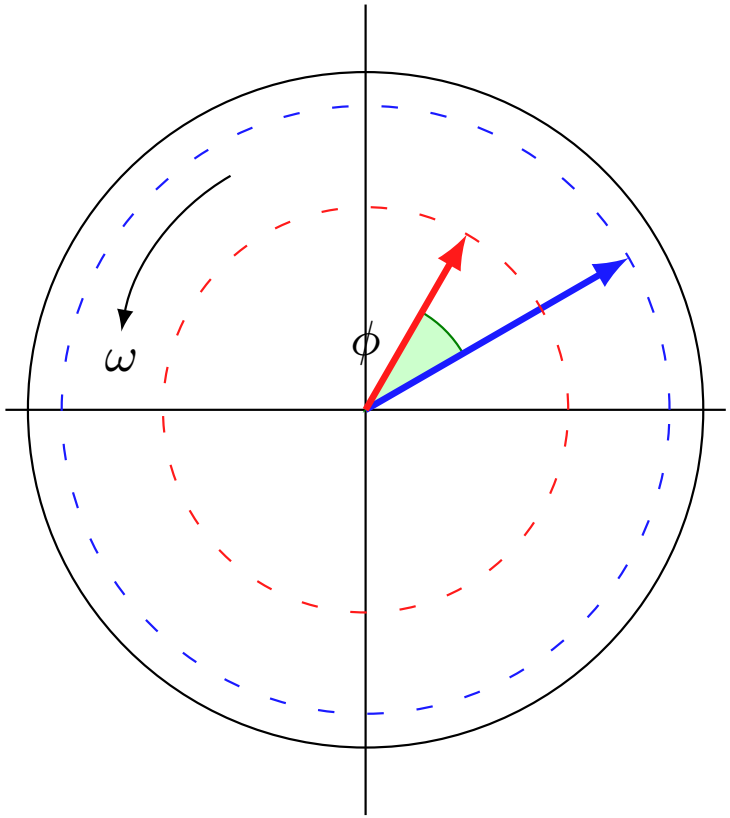

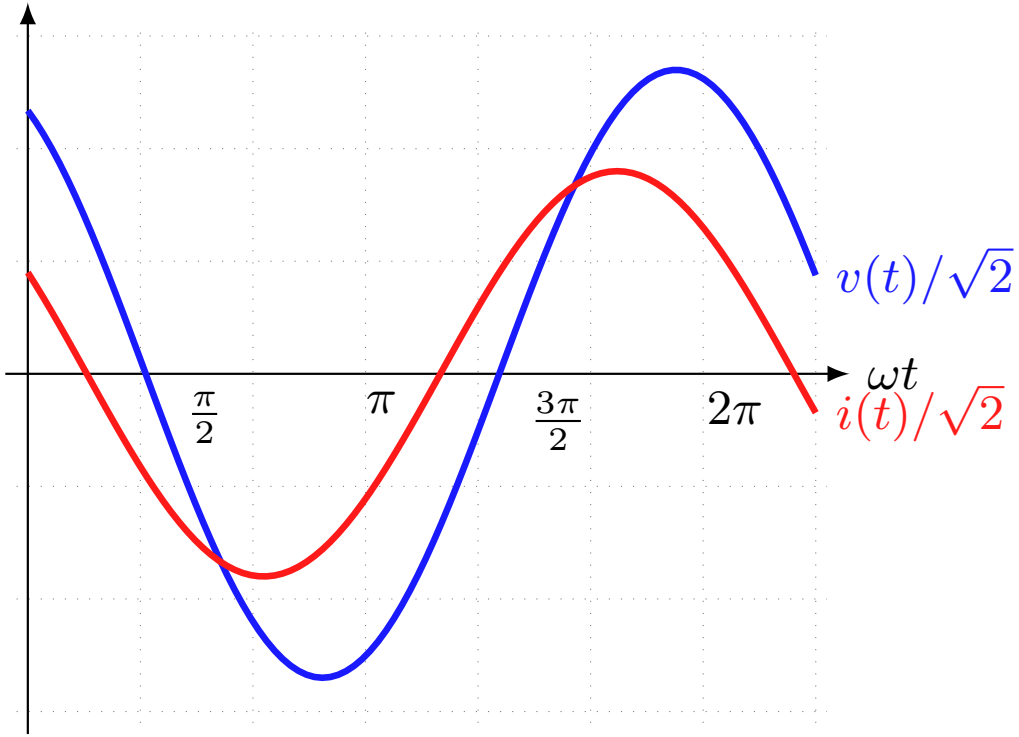

Complex and apparent power

Complex power

$S = P + jQ$ Unit: volt-ampere (VA)

Defining $\bar{I} = \bar{I_P} + \bar{I_Q}$, with

- $\bar{I_P} = I \cos\phi \, e^{j\theta}$
- $\bar{I_Q} = I \sin\phi \, e^{j(\theta - \pi/2)}$

it is easy to show that

$$S = \bar{V}\bar{I}^*$$

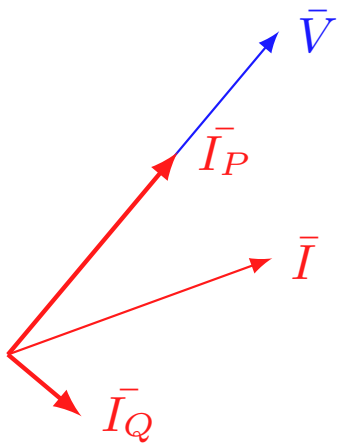

Apparent power

$|S| = \sqrt{P^2 + Q^2} = VI$ Unit: volt-ampere (VA)

From Wikipedia: *"Electrical engineers* **take apparent power into account** *when designing and operating power systems, because though the current associated with reactive power does no work at the load, it heats the conductors and wastes energy.* **Conductors, transformers and generators must be sized to carry the total current, not just the current that does useful work**."

About the power factor

$$\cos\phi = \frac{P}{|S|}$$

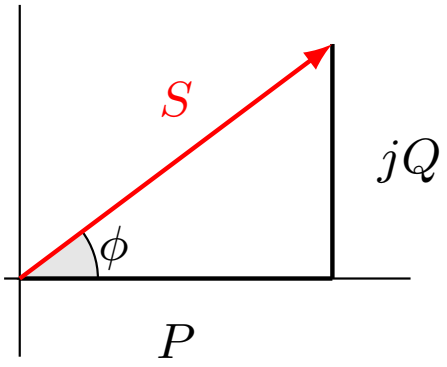

From wikipedia: *"For two systems transmitting the same amount of active power, the system with the lower power factor will have higher circulating currents due to energy that returns to the source from energy storage in the load. These higher currents produce higher losses and reduce overall transmission efficiency. A* **lower power factor** *circuit will have a higher apparent power and* **higher losses** *for the same amount of active power."*

Ideally, the power factor is thus **compensated**, usually by connecting capacitors in parallel to inductive loads.

About the power factor

$$\cos\phi = \frac{P}{|S|}$$

From wikipedia: *"For two systems transmitting the same amount of active power, the system with the lower power factor will have higher circulating currents due to energy that returns to the source from energy storage in the load. These higher currents produce higher losses and reduce overall transmission efficiency. A* **lower power factor** *circuit will have a higher apparent power and* **higher losses** *for the same amount of active power."*

Ideally, the power factor is thus **compensated**, usually by connecting capacitors in parallel to inductive loads.

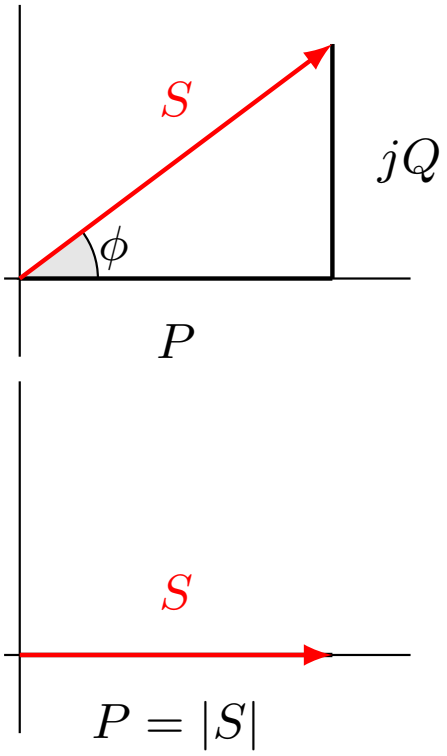

(Perfect) power factor compensation

Balanced three-phase AC circuits

For next lecture: please read chapter 11 and we will do some activities around this topic.

Main facts

- Three-phase system: three conductors carrying currents by design shifted of $120°$, plus one neutral
- Hence 4 conductors in total instead of 2 in single-phase
- Line voltage $\bar{U}$ vs. phase voltage $\bar{V}$: $\bar{U} = \sqrt{3}\bar{V}e^{j\pi/6}$
- Instantaneous power is constant: $P = 3VI\cos\phi = \sqrt{3}\,UIcos\phi$!
- There is a fluctuating power in each phase!
- Why three-phase? Less conductors w.r.t carried power, less vibrations.
- Why *balanced*? Simpler for analysis, desirable economically: neutral conductor can in theory be removed

Outline

Introduction

Definitions and conventions

The notions of power in an AC system

Summary

Summary

- Power = rate of use of energy
- In a single-phase AC system:
  - the instantaneous power = a constant + a term fluctuating at twice the frequency of the voltage
  - active power P corresponds to 'real work' and is measured in W
  - reactive power Q is stored and released and is measured in var
  - the complex power is $S = P + jQ$ and is measured in VA
  - the apparent power $|S|$ is used the size of equipment
  - P and $|S|$ are related through the power factor $\cos\phi = P/|S|$, which originates from the phase difference ϕ between $v(t)$ and $i(t)$
  - a unity power factor is desirable, hence compensation techniques
- In a balanced three-phase AC system:
  - the power carried is equal to three times the power a single phase system would carry, but with proportionally less conductors
  - the total instantaneous power is constant, since fluctuating powers in each phase cancel out

Going further

- How to build a device to **measure** power: see pages 564-567 of the textbook or ELEC0052-2 'Analysis and Design of Electrical Measuring Systems'
- How to **generate and convert** electric power: ELEC0431-2 'Electromagnetic energy conversion'
- How does **power flow** in a power system: ELEC0014 'Introduction to electric power and energy systems'
- How can we **optimize** how power flows in a power system: ELEC0436-1 'Electric Energy Management Systems'
- How are power consumed and power generated **balanced**? ELEC0014 'Introduction to electric power and energy systems' (technical part) and ELEC0018-1 'Energy markets' (economical part)