Lecture 5 : Inverter Control

Bastien Ewbank, Bertrand Cornélusse

ELEN0445 - Microgrids

12 march 2026

Motivation of Today

Room 0/64 B37
Educational Microgrid Setup

Motivation of Today

Single wire equivalent diagram

Question of the day:

How these devices work ?

Outline

1. Voltage Source Converter (VSC)

2. Grid Forming or Grid Following ?

3. Control Design (Clarke & Park, PLL, Current Controller)

4. Soft start and Islanding

5. B37 Microgrids Summary

Voltage Source Converter (VSC)

Classification of converters

1) According to port current type

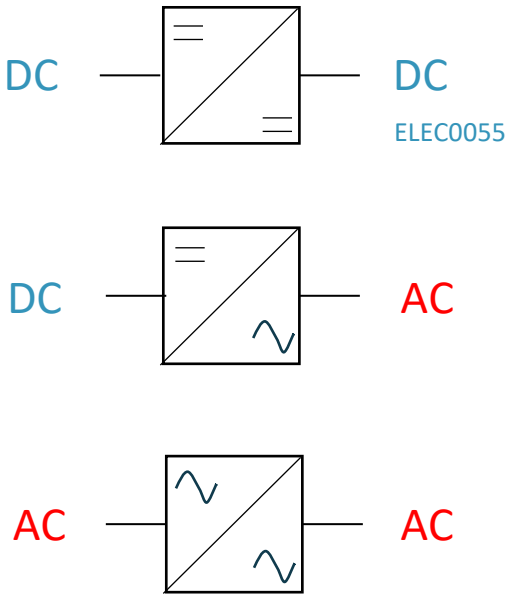

2) to active power flow

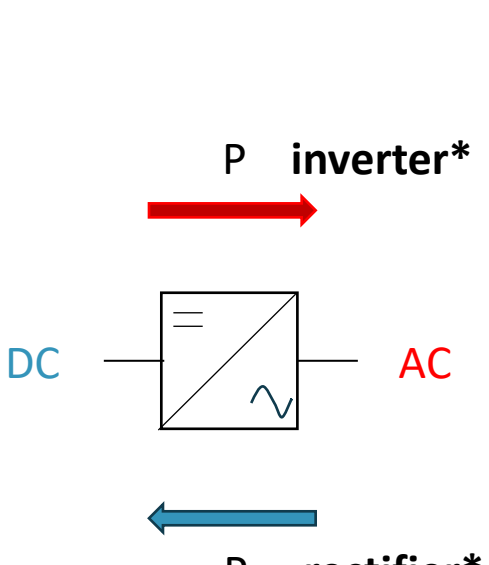

3)Switching device type

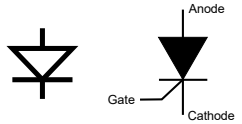

Line Commutated Converter(LCC)
e.g. Graetz, HVDC,…

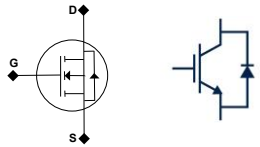

Force Commutated Converter

4)DC constant polarity

Voltage (VSC)

Current (CSC)

According to Ned Mohan ‘s and Amirnaser Yazdani’s books [1-2]

*In some references, ‘inverter’, resp. ‘rectifier’, are sometimes rather linked to the step up, resp step down, behavior of the Voltage between AC and DC.

How would you classify our devices ?

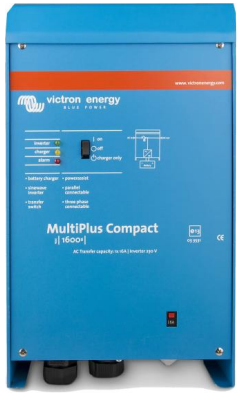

- 3 ports : 2 AC – 1DC → AD/DC
- Power can flow in both direction with respect to DC port → Bidirectional converter or Inverter and rectifier (several names valid)
- Probably* at least few IGBT or MOSFET in the converter circuit → Force Commutated Converter
- A battery can be model as a constant voltage source, and as P flows in both direction current will have + and - polarity → VSC

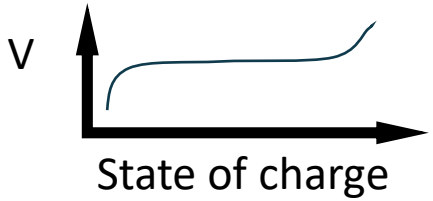

- 2 ports : 1 AC – 1DC → AD/DC
- Power can flow in both direction with respect to DC port **but lighting the sky with bad LED is a very useless usage ;) , so…** → Inverter
- Probably* IGBT or MOSFET based inverter circuit → Force Commutated Converter
- PV panels ?? → Not so obvious for now …

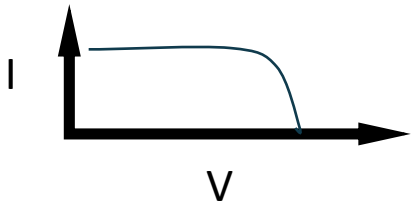

*Manufacturers do not publish the schematic of their converter topology, and reverse engineering is quite complicated.

Classification of converters

1) According to port current type

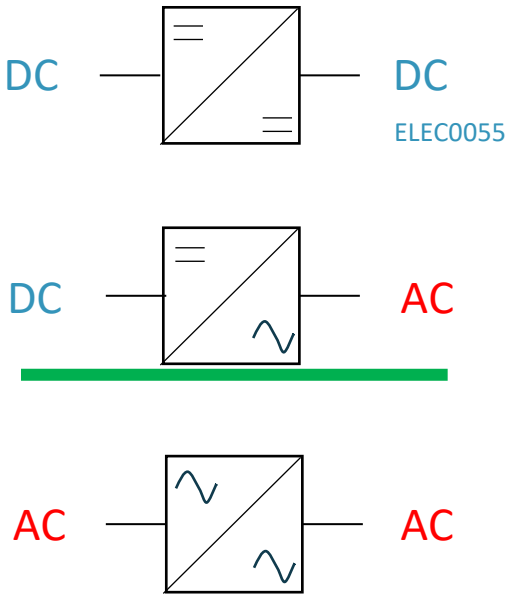

2) to active power flow

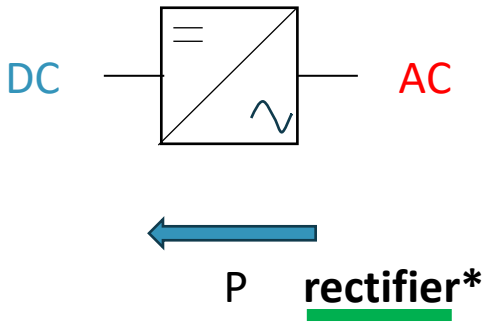

3)Switching device type

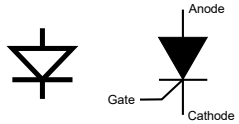

Line Commutated Converter(LCC)
e.g. Graetz, HVDC,…

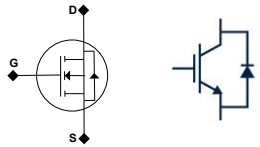

Force Commutated Converter

4)DC constant polarity

Voltage (VSC)

Current (CSC)

According to Ned Mohan ‘s and Amirnaser Yazdani’s books [1-2]

Scope of today

*In some references**, inverter**, resp. **rectifier**, are sometimes rather linked to the step up, resp. step down, behavior of the Voltage between AC and DC.

AC-DC topology in practice:

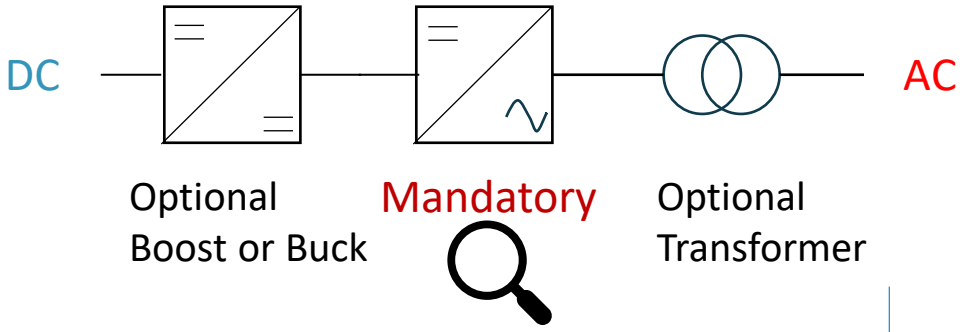

$1\,\phi$

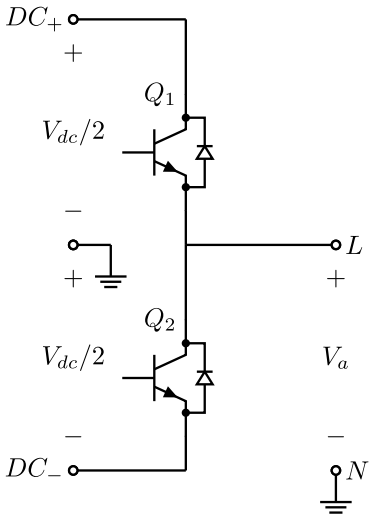

Half Bridge – 2 Switches

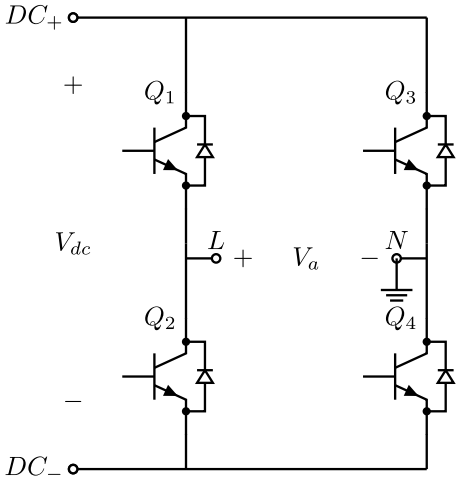

Full Bridge – 4 Switches

$3\,\phi$

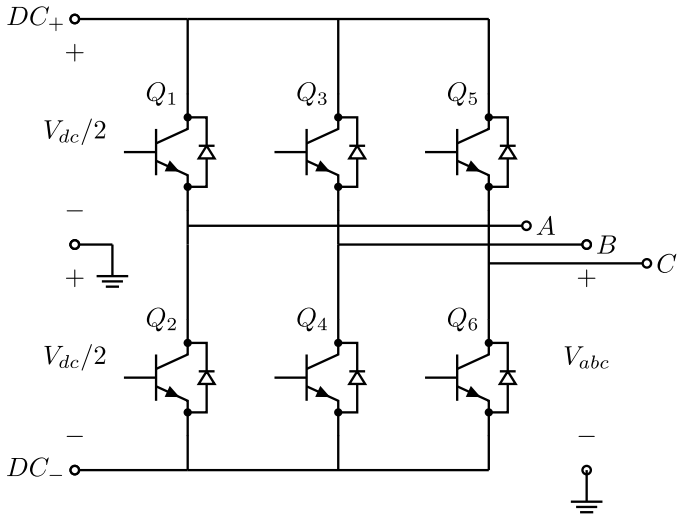

Full Bridge – 6 Switches

+ Others modern topologies such as NPC, Type-T, MMC, … (not covered in this course)

AC-DC VSC for grid applications

Motivation :

- AC : Historically, the grid were build based on AC.

- DC : PV panels are DC sources which are available all around the globe and quite affordable renewables energy sources. Batteries are also DC, but a lot of others energy sources traditionnally based on AC technology are nowadays interfaced through a rectifier and an inverter in series. (AC-DC – DC-AC)

- VSC : **Controlling** a power flow is easier by modulating voltage than with current source as the grid connection point can be considered as a voltage source.

Control….What about Control?

It should be noted that all of the previous classification criteria were based solely on the topology of the power electronics. In other words, they were based on the components through which the power flows.

Grid Forming or Grid Following?

Grid Forming (GFOR) or Grid Following (GFOL)?

1) GFOR and GFOL are **control strategy** ! The same converter device can switch from one to the other if this is appropriate.
2) The word 'Grid' ≈ 'Voltage Source' therefore …

GFOR

= « I'm forming a Voltage source »

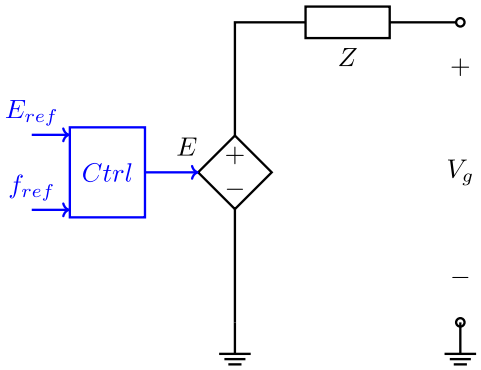

- Act as a **Voltage Source**
- Similar to synchronous generator*
- Require a large, controllable and reliable energy source on DC. (e.g. Battery, Fuel Cell)

GFOL

= « I'm following a Voltage source »

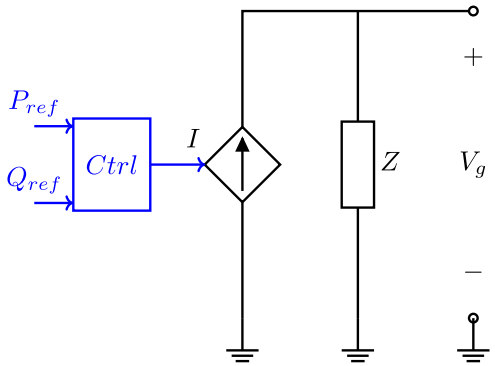

- Act as a **Current Source**
- Require a to sense a low distorted 50/60 Hz Voltage signal from the grid (Power quality).

*personal comment: not so similar but Power Systems people like to make links with what they know. More complete terminology in [3] or [4].

Comment on GFOR vs GFOL

Nowadays almost every distributed generators(DG) such as PV or Wind turbines are GFOL controlled. However Synchronous Machine ↘ while DG ↗ which make the grid weaker.

A lot of research are therefore made on the deployment of GFOR technologies because there is some constraints in the electronics part (cfr. Following Live demo) and compare to synchronous machine there is a missing physical coupling between frequency and active in the basic GFOR.

Some reference speaks sometimes about a **third category** « **Grid Supporting Converter** » which act as a current source but to help managing voltage and frequency on the grid. There is also some « Virtual Synchronous machine control », etc. etc.

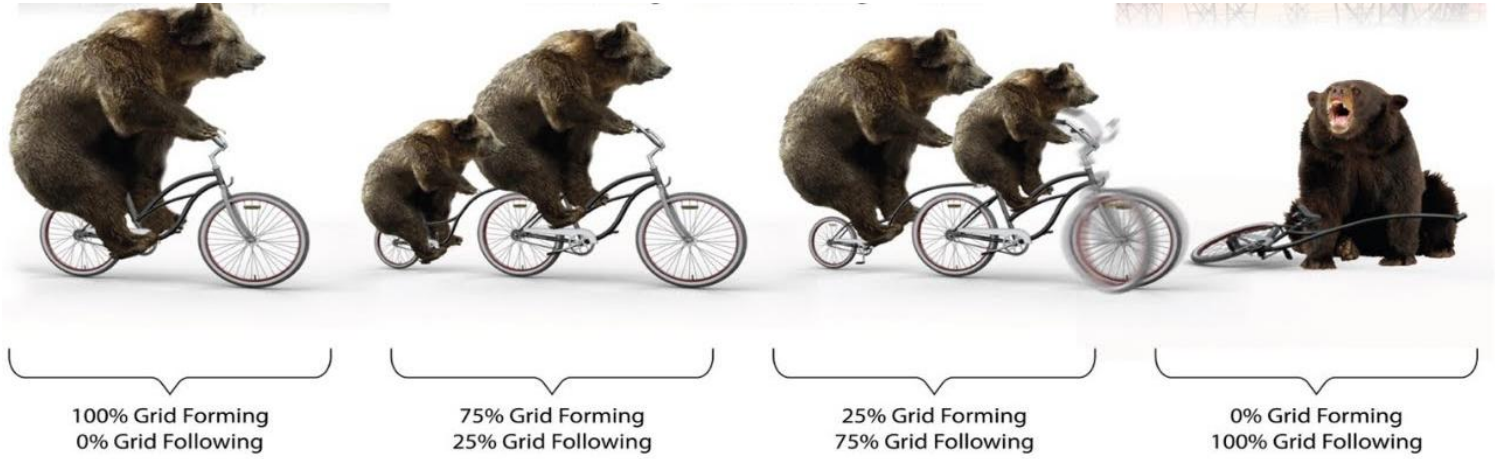

Control Architecture

What are inside of these “Ctrl” blocks ?
→ Let’s discover them with a Typhoon HIL demo

GFOR

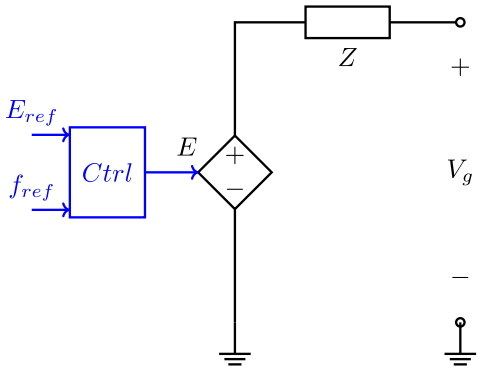

GFOL

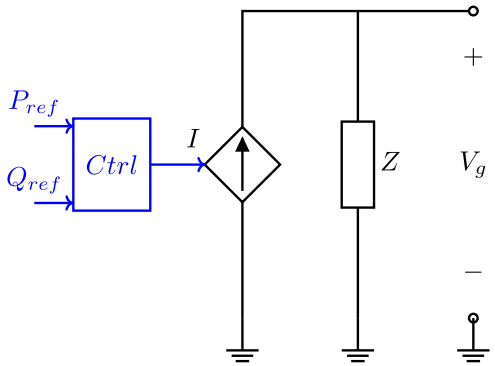

Control Design

Clarke & Park Transformation

$$T_c = \frac{2}{3}\begin{pmatrix} 1 & -\frac{1}{2} & -\frac{1}{2} \\ 0 & \frac{\sqrt{3}}{2} & -\frac{\sqrt{3}}{2} \\ \frac{1}{2} & \frac{1}{2} & \frac{1}{2} \end{pmatrix}$$

$$T_p(\omega t) = \frac{2}{3}\begin{pmatrix} \cos(\omega t) & \cos(\omega t - \frac{2\pi}{3}) & \cos(\omega t + \frac{2\pi}{3}) \\ -\sin(\omega t) & -\sin(\omega t - \frac{2\pi}{3}) & -\sin(\omega t + \frac{2\pi}{3}) \\ \frac{1}{2} & \frac{1}{2} & \frac{1}{2} \end{pmatrix}$$

$$T_p(\omega t) = \begin{pmatrix} \cos(\omega t) & \sin(\omega t) & 0 \\ -\sin(\omega t) & \cos(\omega t) & 0 \\ 0 & 0 & 1 \end{pmatrix} T_p$$

Clarke +Rotation of angle ωt

$$V_{abc}(t) = \begin{pmatrix} V_a(t) \\ V_b(t) \\ V_c(t) \end{pmatrix}$$

Park

Clarke

Rotation

$$V_{dq0}(t) = \begin{pmatrix} V_d(t) \\ V_q(t) \\ V_0(t) \end{pmatrix}$$

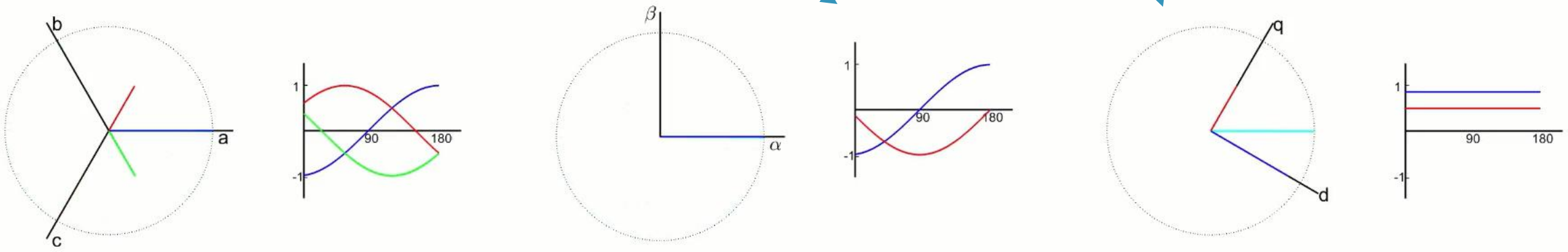

Usefulness for AC systems

The $dq0$ space is a representation that can be compared, in terms of purpose, to the phasor ($\bar{V}$) concept that you discovered for sinusoidal steady-state operation. It allows you to manipulate time-invariant signals if the actual signal varies like a pure sine wave. From a control theory perspective, this allows you to use well-known controllers such as PID control or other filters.

$$V_{abc}(t) = \begin{pmatrix} V_a(t) \\ V_b(t) \\ V_c(t) \end{pmatrix}$$

Park

Clarke

Rotation

$$V_{dq0}(t) = \begin{pmatrix} V_d(t) \\ V_q(t) \\ V_0(t) \end{pmatrix}$$

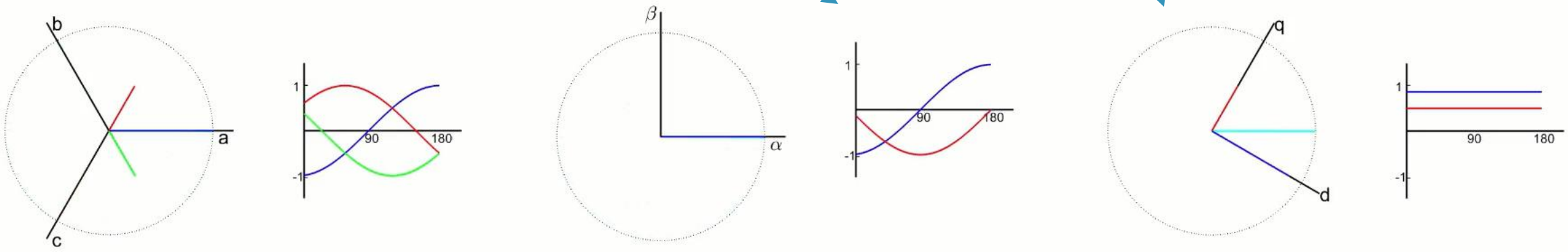

Phase Locked Loop (PLL)

Did you notice that for applying T_p you need to know ωt ?
The question is how to get ωt ?

Using a Phase Locked Loop (PLL) of course !

The **PLL** is a control unit which allows to **track the phase and the frequency** of a periodic signal.
It is use mainly in telecommunications for demodulation techniques and in power systems for …
FOLLOWING the grid.

3ϕ exemple:

Park - T_p

PI control with V_q
➔ Goal $V_q = 0$
➔ rotating frame aligned with V_{abc}

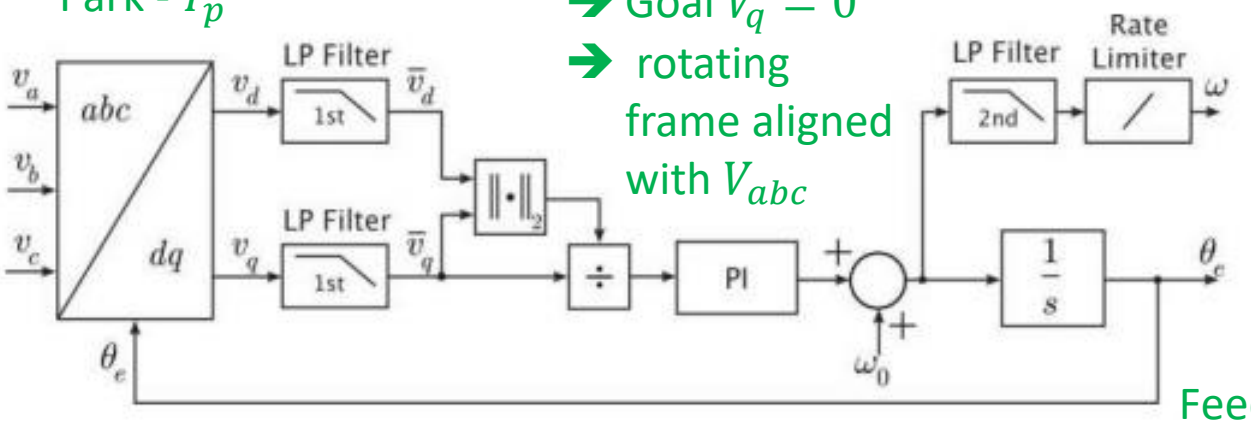

Feedback $\theta = \omega t$

Current Controller

Never forget that the actuators of a VSC converter are switching device which in the end generate a certain voltage waveform. The question is how can I control the current if I'm generating a voltage ?
→ Using Ohm's law and 2 sensors (1 voltmeter and 1 ammeter).

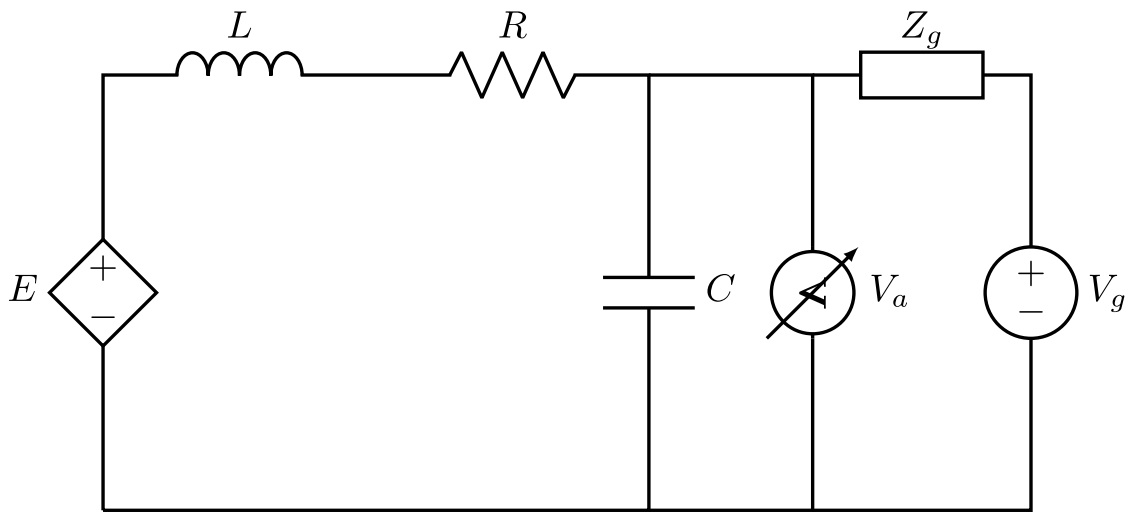

$$E(t) - V_a(t) = L\frac{dI(t)}{dt} + RI(t) \qquad (1)$$

Move to $dq0$ space + derivative of a product of matrices --> get expression for in E_{dq0} which is the waveform to be modulated by the switches.

Hint :

$$T_p^{-1} = \begin{pmatrix} \cos(\omega t) & -\sin(\omega t) & 1 \\ \cos(\omega t - \frac{2\pi}{3}) & -\sin(\omega t - \frac{2\pi}{3}) & 1 \\ \cos(\omega t + \frac{2\pi}{3}) & -\sin(\omega t + \frac{2\pi}{3}) & 1 \end{pmatrix}$$

$$V_{abc}(t) = T_p^{-1} V_{dq0}(t)$$

Current Controller

Never forget that the actuators of a VSC converter are switching device which in the end generate a certain voltage waveform. The question is how can I control the current if I'm generating a voltage ?
→ Using Ohm's law and 2 sensors (1 voltmeter and 1 ammeter).

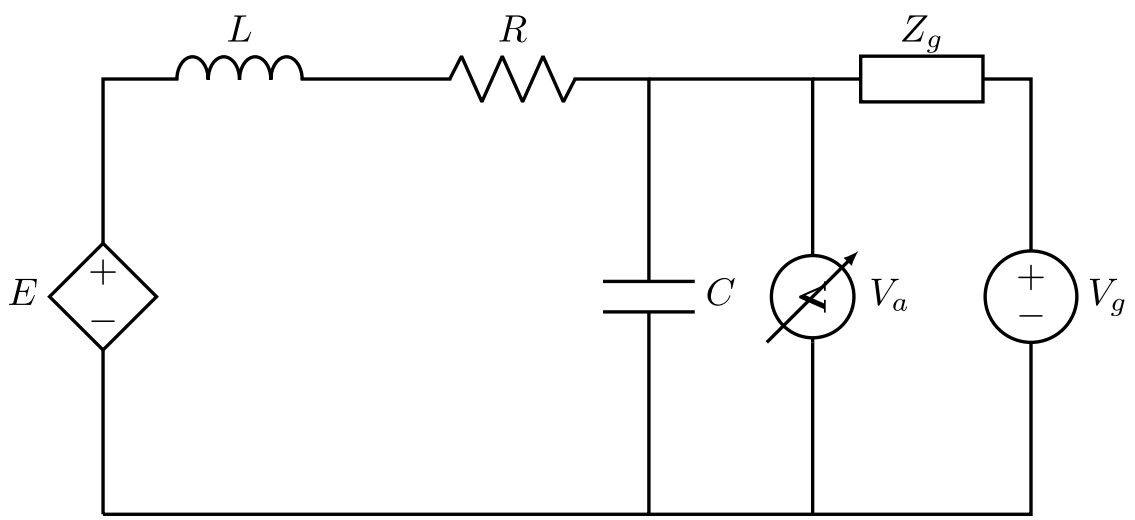

$$\begin{cases} E_d(t) = L\dfrac{dI_d(t)}{dt} - L\omega I_q(t) + RI_d(t) + V_d(t) \\ E_q(t) = L\dfrac{dI_q(t)}{dt} + L\omega I_d(t) + RI_q(t) + V_q(t) \end{cases}$$

Green Terms : In practice replaced by the output of a PI controller
Blue terms : Feedforward of measurement

Softstart and Islanding

Softstart and Islanding

Main message is: if one day you work on the design of a converter, or even if you install some converter device never forget the transient behavior of some electrical components before you close a relay or make two wire touch each other.

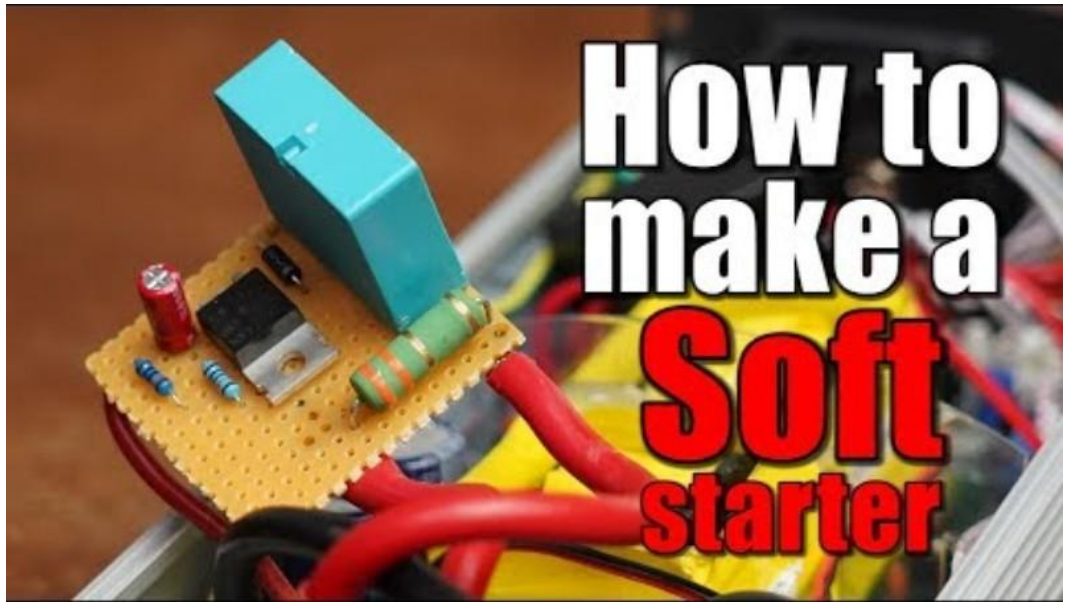

Capacitive Transient

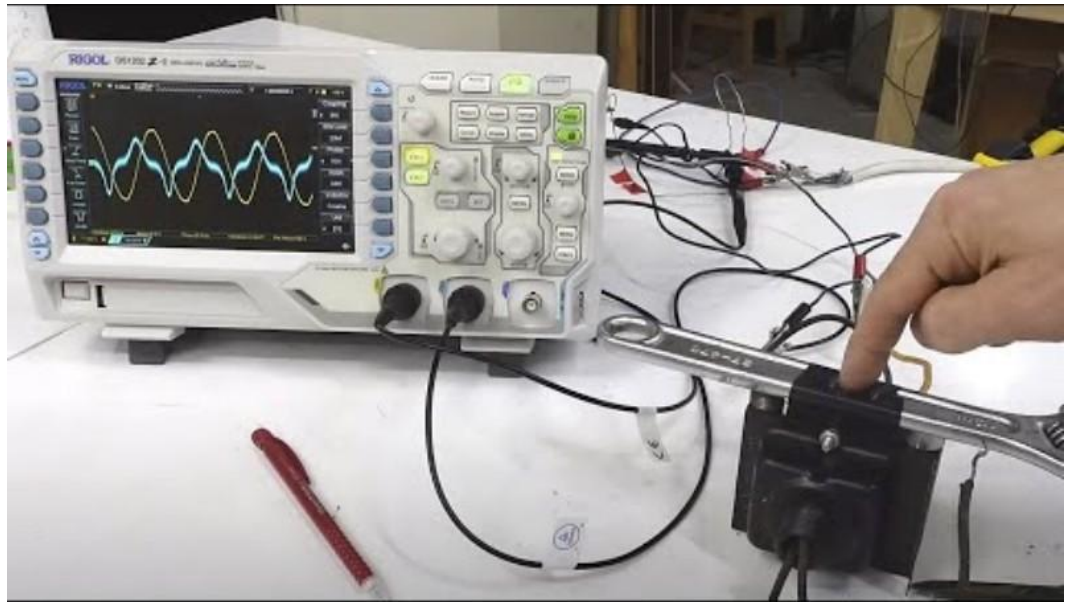

Magnetic Transient

Summary

Key takeaways

- VSC are AC/DC converter with constant polarity of the DC Voltage that we modulate in the desired shape on the AC side.

- To work properly as an inverter, VSC need that $V_{dc}(t) \gg V_a(t)$. For example, a full bridge topology requires that $V_{dc} \geq \max_T\left(V_a(t)\right)$.

- P can flow from AC towards DC not only if $V_{dc} \leq \max_T\left(V_a(t)\right)$ (= body diodes are conducting).

- GFOR acts as Voltage source

- GFOL acts as Current source

- In practice the simple open loop GFOR I introduced, will only exist in islanded microgrids and with ideal voltage source that can provide or consumme any power. When someone discuss about « grid connected GFOR inverter » it will be in practice a controller with some limitations in P and Q transfer. So in the end it can be seen as an inverter with both GFOR and GFOR control strategy implemented but switch from one to another depending of the operating condition.

- PLL is a control unit that tracks frequency and phase of an AC signals.

Summary

Operation

SMA Sunny Boy

- Inverter (Unidirectional by control limits)
- Operated as a VSC (Large Capacitors banks on the DC side to make the voltage more constant)
- GFOL with Pref form MPPT

P

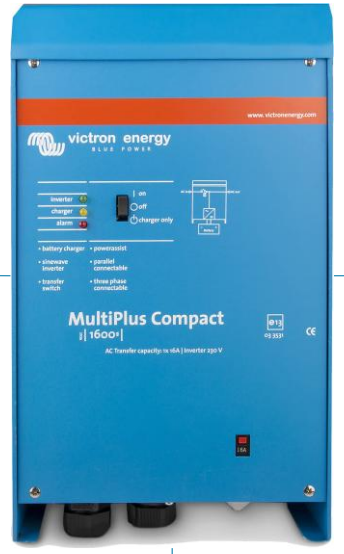

P

Victron Multiplus:

- Rectifier (Inverter with rev. P)
- VSC
- GFOL with Pref form CC-CV algorithm

Summary

Operation

Islanded Microgrids

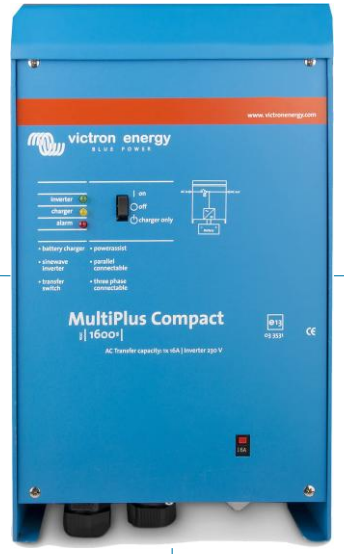

SMA Sunny Boy

- Inverter (Unidirectional by control limits)
- Operated as a VSC (Large Capacitors banks on the DC side to make the voltage more constant)
- GFOL with Pref form MPPT

P

P

Victron Multiplus:

- Bidirectional Inverter
- VSC
- GFOR with limitations on I to avoid burning components.

References

[1] Mohan, N., Undeland, T. M., & Robbins, W. P. (1995). *Power electronics : Converters, applications and design* (Second edition). John Wiley & sons.

[2] Yazdani, A., & Iravani, R. (2010). *Voltage-sourced converters in power systems : modeling, control, and applications* (1st edition). Wiley. https://doi.org/10.1002/9780470551578

[3] Rocabert, J., Luna, A., Blaabjerg, F., & Rodríguez, P. (2012). Control of Power Converters in AC Microgrids. *IEEE Transactions on Power Electronics*, *27*(11), Article 6200347. https://doi.org/10.1109/TPEL.2012.2199334

[4] Zhang, H., Xiang, W., Lin, W., & Wen, J. (2021). Grid Forming Converters in Renewable Energy Sources Dominated Power Grid: Control Strategy, Stability, Application, and Challenges. *Journal of Modern Power Systems and Clean Energy*, *9*(6), 1239–1256. https://doi.org/10.35833/MPCE.2021.000257