LIÈGE université
Sciences Appliquées

Introduction & course organization

ELEN0445 - Microgrids

Bertrand Cornélusse

January 29, 2026

Overview

1. Introduction

2. Special Cases

3. Microgrid Controllers

4. Organization

Introduction

The current power system in “developed” countries

Pros :-)

- Working seamlessly for decades
- Relatively affordable price
- High service level

Cons :-(

- Relies heavily on hydrocarbons from extraction, that will inevitably vanish
- Difficulties to (re)develop Nuclear power
- Centralized, long distances, not always good for reliability and efficiency
- Public adoption issues for expansion
- hard to reproduce everywhere
- Difficulties to organize smarter distribution grids

Can microgrids solve some of the cons while keeping the pros?

A bit of history: Edison vs. Tesla

- First grids followed Edison's view, were DC and localized
- Tesla and co. imposed the bulk/centralized view in AC
  - More adapted to motors
  - Easier to raise/decrease voltage level, thus reduce losses
- Now Edison view can be implemented because technically feasible:
  - power electronics, energy storage, advanced load control, intelligent control, and communication
  - (not necessarily through DC grids, although this could be an option).

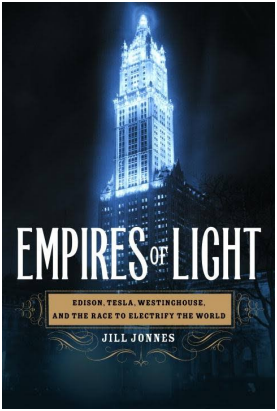

Interview of the author

First definition of a microgrid

A microgrid (MG) is a “complete” but small power system.

It is a network of consumer, generation and storage devices that can be optimized jointly to satisfy goals(*).

- it can connect (be tied) to or disconnect (be islanded) from the main grid

It makes more sense when those devices are within clearly defined electrical boundaries.

It is on the “customer side”, although it can be operated by a third party.

*We will see later on what are the goals, or functions of a microgrid

Components of a microgrid

- People
- Consumption devices
- Generation devices
- Storage devices
- Inverters
- A network
- Sensors and actuators

Schematic example

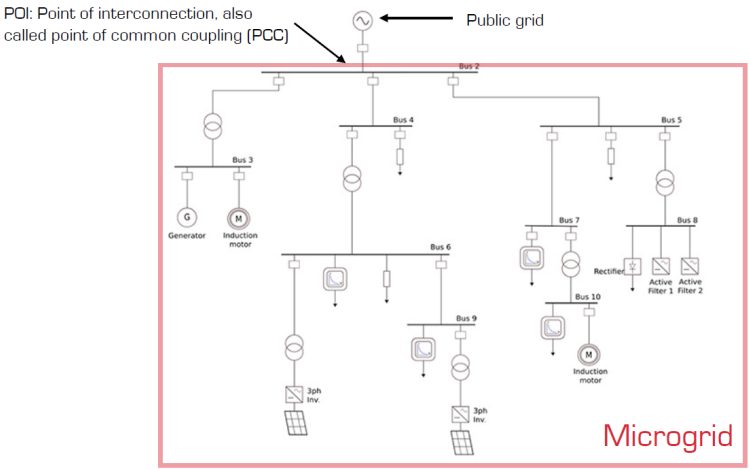

Source image taken from Typhoon HIL webstite

“Copper plate” assumption

In this course, unless stated otherwise, we (almost) neglect the network connecting the components of the microgrid.

This means mainly that we neglect losses, and other electrical phenomena that can be caused by the impedance of the cables connecting the devices.

Why?

- Because network modeling is the topic of other courses (ELEC0447, ELEC0448).
- Because we will focus on other aspects not covered in these courses: MPPT, forecasting, operational planning, sizing.

Schematically

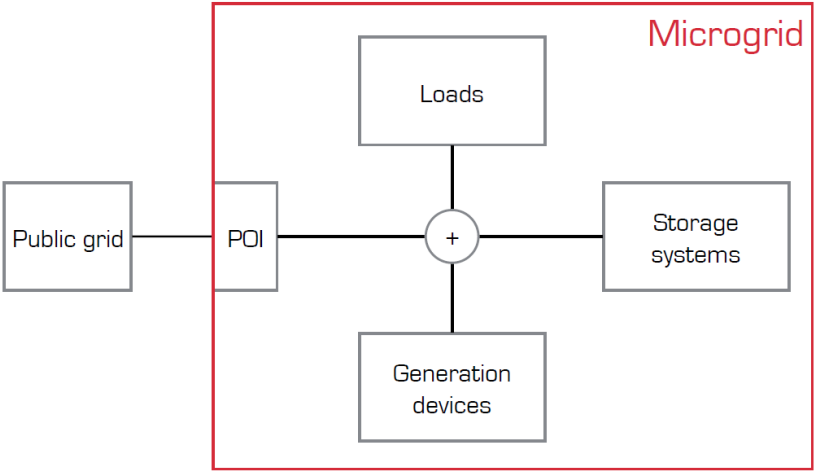

Main goals of a microgrid

- Satisfy the demand with maximum reliability and power quality
- Maximize the renewable energy harvested locally
- Minimise the total cost of electricity: local electricity may be cheaper than from the grid, at least periodically
- Help the public grid
- Local jobs, energy belongs to the people
- May increase security of supply, through (long-term) storage

Why building/studying microgrids?

The

- development of distributed generation,
- decreasing costs of storage means,
- evolution of communication and sensing technologies

open new options to the conventional distribution of electric energy and new possibilities for integrating distributed generation smoothly in constantly evolving energy and ancillary services markets (defined on the next slides).

Energy markets I

- Energy markets organize the sales and purchases of the electricity commodity
- They are organized by time frame (futures, day-ahead, intra-day)
- By actively participating in the market, you can obtain the electricity at the price you are willing to pay or sell only if profitable.

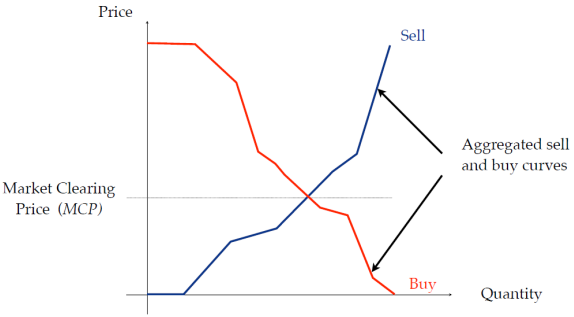

Energy markets II

- Examples of market operators: Epex-Spot, NPS, ...
- Market operators, retailers and producers should not be confused with System operators (SOs):
  - E.g. ELIA is the Belgian Transmission System Operator (TSO)
  - E.g. Resa and ORES are Distribution System Operators (DSOs) in the Walloon region
- Microgrids are most of the time too small to access to the market. They'll have to go through a "third party", i.e. a retailer + balance responsible party (BRP)

Ancillary services markets

Ancillary services are offered by entities that have the ability to modulate their generation or consumption, within prespecified boundaries and time frame, to help the system:

- for balancing generation and demand
- for relieving congestions
- for voltage support

Ancillary services markets are organized by the TSO (e.g. ELIA in Belgium) for balancing services, and also by the DSO for local services (this is still a topic of active discussion)

A (grid-tied) microgrid offers many value creation mechanisms

Function	Description	BSS[1]
Energy markets	Decide on the price your are willing to pay/sell	+
Ancillary services	Sell services to the grid	++
Peak reduction	Through local and community optimization	++
UPS functionality	Operate in islanded mode	+++
Efficiency	Through optimized load and generation management	
Community	Exchange energy locally at a preferred tariff	+

[1] Battery Storage System.

Advantages for the public grid

Function	Description
Peak reduction / flow management	Momentarily set constraints to the microgrid
Voltage support	Reactive power flexibility of battery storage and PV
Phase balancing	Using storage DC buffer
Power factor correction	Flexibility of inverters
Frequency support	Primary or secondary reserve

Special Cases

Off-grid microgrids

Off-grid microgrids are a special case of microgrid.
They have no connection to a public grid either because

- the public grid does not exist or cannot reach the location of the microgrid
- the public grid exists but is unreliable

https://play.google.com/store/apps/details?id=net.samham.electricity

Local Energy Communities

- **Single-user microgrid**: loads, generation, storage, a network, a connection to the grid (the definition of a micro-grid we have seen so far) Note: legal, e.g. your house with PV and storage.
- **Community microgrid**: a group of single-user microgrids + a microgrid operator. Note: legal or not depending on the region you live in and the particular situation.

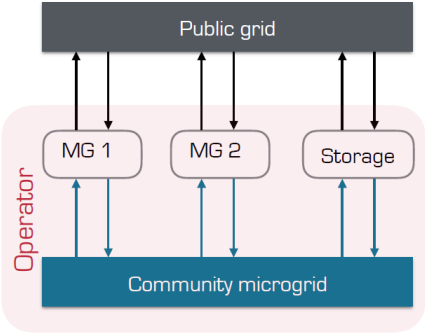

Forming a local community allows reaching a critical size, but opens up other issues (regulatory, organizational, of fairness, etc.)

The MeryGrid project

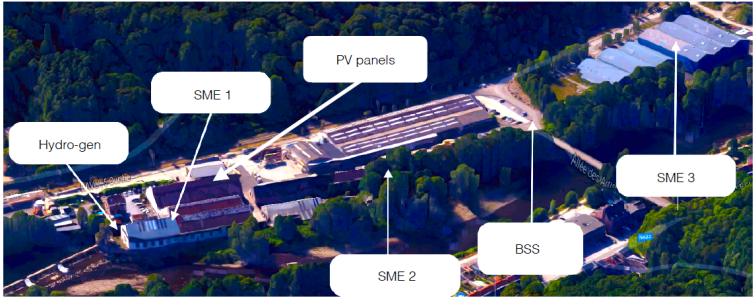

With the support of the Wallon Government, in collaboration with Nethys, CE+T, Sirris, MeryTherm, SPI

Cornélusse, B., Ernst, D., Warichet, L., & Legros, W. (2017). Efficient management of a connected microgrid in Belgium. In Proceedings of the 24th International Conference on Electricity Distribution, Glasgow, 12-15 June 2017. Available here.

Microgrid Controllers

Microgrid controllers

A microgrid controller is a software that is sensing the microgrid (currents, voltages, frequency, etc.) and taking control actions so as to operate safely, reliably and optimally the microgrid.

In practice, a microgrid is run by multiple controllers, because there are several levels of control, which differ by their spatial and temporal scopes.

Next to technological advances in production, consumption and storage, controllers are key elements for advanced microgrids.

Control levels

Level	Function	Examples
1	Device level control	BSS control, reactive control, MPPT
2	Local area control	Frequency regulation, fast load shedding
3	Supervisory control	Forecasting, operational planning
4	Public Grid interaction	Ancillary services, energy markets

Some functions of microgrid controllers I

Frequency control

- balance generation and load => maintain frequency
- fast real-time, milli seconds
- Some predefined primary sources respond to frequency deviation (droop control)

Voltage control

- Regulation of voltage a PCC within a respecified range (magnitude and phase)
- fast real-time, milli seconds
- Some predefined primary sources respond to voltage deviation (droop control)

Some functions of microgrid controllers II

Grid connected to islanded transition : intentional or unintentional

- Islanded means MG keeps operating but is disconnected from main grid
- intentional means controller can prepare (e.g. start a genset, reduce current through PCC, etc.)
- unintentional means in reaction to a large disturbance, either internal or external to the MG

Islanded to grid-connected transition

- MG resynchronizes and reconnects to the distribution system

Some functions of microgrid controllers III

Energy management: grid connected

- Cf. all advantages offered by MG on previous slide

Energy management: islanded

- “Economy mode” to power critical loads as long as possible

Microgrid protection

- Configuration of protections of devices depending on operating conditions (e.g. islanded or not, a genes is up and running or not, etc.)

Some functions of microgrid controllers IV

Microgrid black start

- Restore islanded operation after complete shutdown

Organization

Content of the course and evaluation

- Review microgrid components, technology and trends
- The main focus will be on design and optimal control of a microgrid
  - Formulation of the associated control, optimization and machine learning problems
  - With an introduction to the required mathematical background
  - Detailed models of some components
- Evaluation:
-
  - Maximum 5 mandatory assignments to practice all these concepts
  - Small reports and oral presentations.

Important topics that are not covered in the course

- Detailed technical models and controllers of components (e.g. inverters):
  - For energy storage, see CHIM0664-1 “Electrochemical energy conversion and storage” by Nathalie Job.
  - For power electronics related topics, see ELEC0055-1 “Element of power Electronics”, by Fabrice Frebel
- Organization of energy markets: ELEC0018-1 “Energy Markets” by Damien Ernst
- Protection devices and protection schemes