LIÈGE université
Sciences Appliquées

Microgrid architectures

ELEN0445 - Microgrids

Bertrand Cornélusse

January 30, 2026

Overview

1. Rules for connecting DER to the grid

2. DC microgrids

3. A first microgrid demonstration Lab visit

Content of this lecture

In this lecture we review microgrids architectures, that is which components form a microgrid and how to interconnect them.

AC grids

An alternating current (AC) microgrid is a microgrid where components are coupled through one AC bus, or an AC network, potentially with two voltage levels if the network is long (e.g. a few kilometers).

- Most microgrids are AC
- Typically, AC microgrids where the demand $> 10\ \mathrm{kW}$ are three-phase!
  - Required if you want to connect to the public grid (in Belgium)
  - Equipment in general require less components per unit of power transferred
  - Easy to generate a rotating field for motors
  - (Three-phase power transfer is a constant expression, if the phases are balanced)

Grid topologies

Most common: **radial** architecture

- Subject to availability issues (one single path to a load)

Alternatives:

1. provide a **redundant path** to each load (more robust than radial)
2. provide **spatially diverse paths** (more robust than 1)
3. **ring-type** distribution (Can isolate a fault and still feed all but problematic zone)
4. **ladder type** distribution (yet more connection possibilities)

Note: a more complex system also needs more complex protection schemes.

AC coupling example

Let's take the example of a house or a small company that is running at low-voltage (230 V or 400 V) and has a grid connection plus a backup diesel generator, some PV panels, a battery, and some appliances.

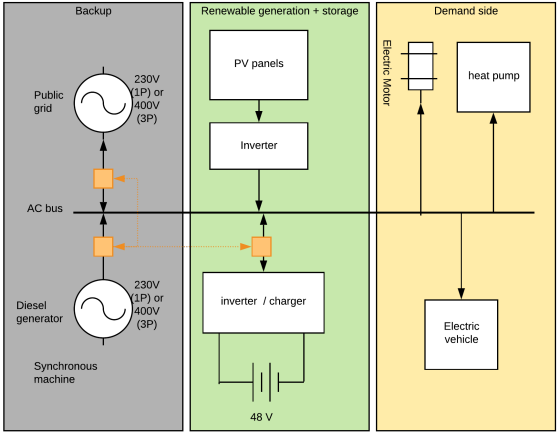

Automatic transfer switches

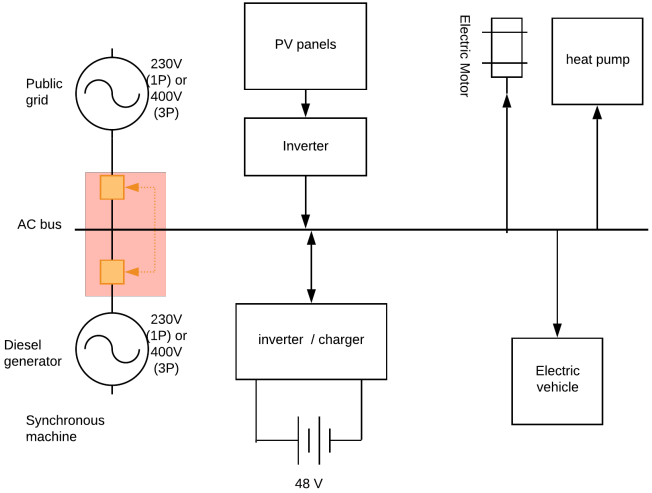

Automatic transfer switch principle

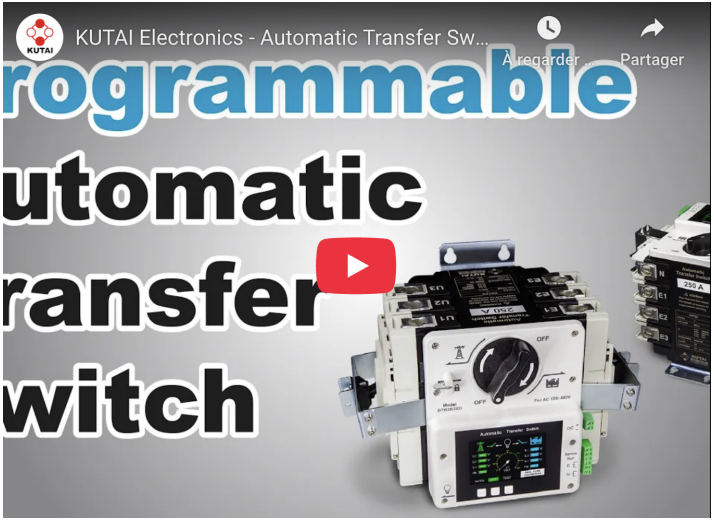

Power electronics interfaces I

Power electronic circuits are interfaces

- between devices (DERs and loads) and the power distribution grid
- between the microgrid and the distribution grid (PCC)

Purpose: enable a controllable (bidirectional) flow between devices
*DER: sources of electric power that are not directly connected to a bulk power transmission system. Distributed energy resources include both generators and energy storage technologies. (T.Ackermann, G.Andersson, and L.Söder, "Distributed Generation: A Definition," Electric Power Systems Research, vol. 57, issue 3 , April 2001, pp. 195-204.)

Types of power electronics interfaces

Grid-following converters (Fig (b)): can be represented as an ideal current source setting the active and reactive power injected into / withdrawn from the grid.

Grid-forming converters (Fig (a)): can be represented as an ideal AC voltage source setting the voltage amplitue and frequency of the local electrical grid.

Grid-supporting converters (Fig (c)): "inbetween the two others", implementing functions to support the grid, e.g. droop control.

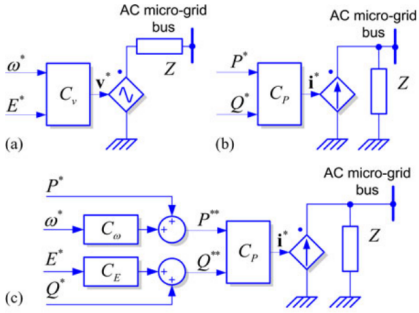

From *Rocabert, J., Luna, A., Blaabjerg, F., & Rodríguez, P. (2012). Control of power converters in AC microgrids. IEEE Transactions on Power Electronics, 27(11), 4734-4749. https://doi.org/10.1109/TPEL.2012.2199334*

Example: solar inverter

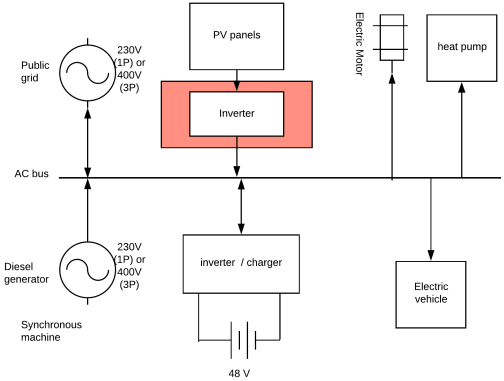

Here it is a three-phase inverter from SMA. Source: website of SMA

Requires a network signal to work! **Grid following**.

Example: Vehicle to grid

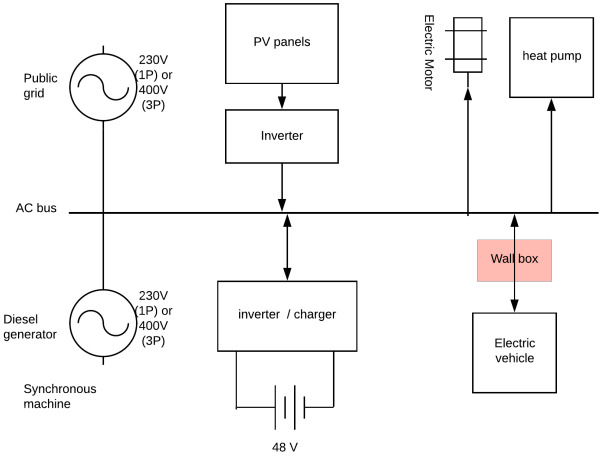

The car that does much more

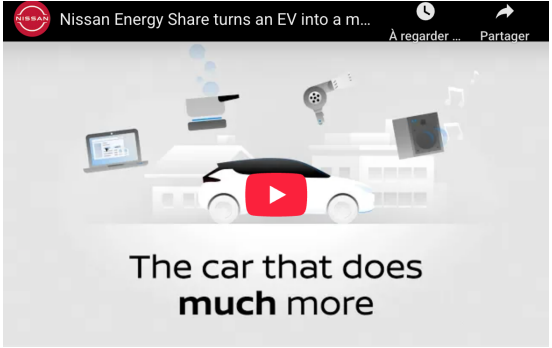

Example: Automatic transfer switch, grid forming inverter & battery charger

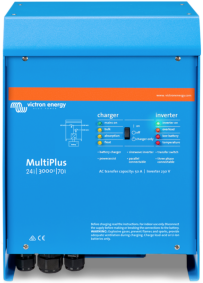

MultiPlus

Multifunctional

The MultiPlus, as the name suggests, is a combined inverter and charger in one elegant package. Its many features include a true sine wave inverter, adaptive charging, hybrid PowerAssist technology, plus multiple system integration features.

Models:

800VA, 1200VA, 1600VA, 2000VA, 3000VA, 5000VA

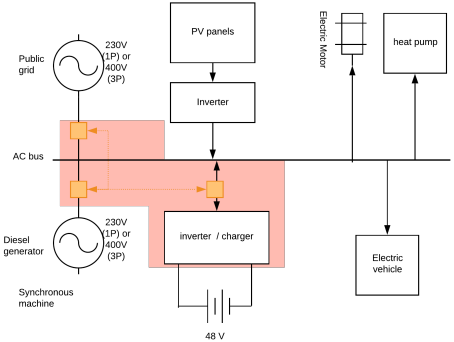

Source: website of Victron.

Characterizing power distribution architectures based on how power conversion is performed I

- Centralized: power conversion is performed at a single power electronic interface.

Hybrid SolaX inverter X1-5.0T HV

Ref: X1-Hybrid-5.0-D-E

- Quick start
- WIFI internet monitoring
- Integrated battery management high voltage
- Operate without a power network
- Single phase inverter
- None injection solar excess

Characterizing power distribution architectures based on how power conversion is performed II

- Distributed: power conversion functions are spread among converters
  - may lead to parallel or cascade structures

Rules for connecting DER to the grid

Synergrid I

Synergrid is the federation of electricity and gas network operators in Belgium. Synergrid establishes prescriptions for a series of topics related to distribution systems.

In the "Technical Prescription C10/11 of Synergrid, edition 2.1 (01.09.2019) (English translation)", you can find the rules that apply to a new installation.

"This document C10/11 lays down the technical requirements relating to the connection of power generating plants capable to operate in parallel to the distribution network. The objectives of this document are the following:

Synergrid II

- ensure proper operation of the distribution networks;
- improve the safety of staff active in these networks;
- protect the distribution network’s infrastructure;
- and contribut to the general system stability. "

Application domain of C10/11

Applies to:

- Plants $< 25\mathrm{MW}$ connected to the distribution grid
- Any energy source
- Without limitation regarding the possibility of actually injecting energy to the distribution network; this means, for example, that it is also applicable to power-generating plants equipped with a zero export relay. (...)
- ...

But not to:

- Off-grid systems
- Backup systems (not actually able to feed in the grid)
- ... (elevators)

Special cases

A power backup system (as specified in § 4.1.9) will only operate in parallel with the distribution network for a short time in the following sporadic cases:

- During tests
- In case of islanding / reconnection after a network faults ("make-beforebreak")
- ...

There are maximum durations depending on the cases.

Maximum power limits for a small power-generating plant I

	Connection to the low-voltage distribution network		**Connection to the high-voltage distribution network**
	Single phase connection to the distribution network	**Three-phase connection to the distribution network**	
Sum of the power of the power-generating units other than the possible energy storage systems	≤ 5 kVA[9]	≤ 10 kVA	≤ 10 kVA
Sum of the power of the energy storage systems	≤ 5 kVA[10]	≤ 10 kVA	≤ 10 kVA

Maximum power limits for a small power-generating plant II

- Each power-generating unit must be equipped with an **automatic separation system**
- If the power-generating plant includes an energy storage system,
  - an EnFluRi sensor must be provided to control the power injected on the distribution network.
  - the EnFluRi sensor is a directional power sensor having a communication link with the energy storage system.
  - the power injected into the distribution network is limited to the maximum power of the other means of power-generation.

Settings of the automatic separation system (Annex C)

Function	Trip setting
Overvoltage 10 min mean	230 V + 10 % no delay*
Overvoltage	230 V +15 % no delay*
Undervoltage	230 V -20 % no delay*
Overfrequency	51,5 Hz no delay*
Underfrequency	47,5 Hz no delay*
LoM	according to EN 62116

« No delay » means that no time delay is added to the intrinsic technical duration required to initiate the disconnection. The operate time may not exceed 200ms.

Syncrocheck

The power-generating units which synchronize with the voltage on the distribution network (such as synchronous machines, island equipment ...), have to be equipped with a synchrocheck relay (equipped with a synchroscope) of a type homologated by Synergrid.

The synchrocheck is set as follows unless determined otherwise by the DSO:

- Voltage difference < 5%
- Phase difference $< 5^\circ$
- Observation time $= 0,5$ seconds

Technical basic requirements regarding the power generating units (Annex D)

E.g. Specific for a small power-generating plant (D.7.1.1)

By default, the power generation unit must operate according to the following rules:

- When the voltage $\leq 105\% U_n$: $\cos\phi = 1 (Q = 0)$
- When the voltage $> 105\% U_n$: free operation with $1 \geq \cos\phi > 0.9$ underexcited. (no overexcited operation allowed)

DC microgrids

DC microgrids

- The distribution system is DC
- Requires DC to DC converters to adapt voltage to devices
- DC to AC to power AC loads, or to inject in the public grid
- AC to DC to convert AC generation to DC (e.g. from public grid to microgrid)
- DC microgrids are not widespread but gain some interest

DC microgrids example

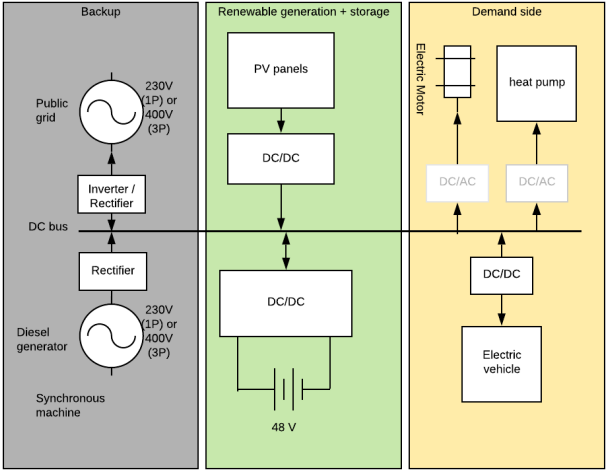

DC vs AC: pros

- DC systems enable a simpler integration of DERs, since many of them are either DC by nature or require a DC interface anyway
- Parallel distributed architectures are simpler to realize in DC: unnecessary frequency control and phase synchronization
- Frequency control is not necessary in DC systems, unwanted harmonic content may by easier to filter too
- Autonomous distributed control harder in DC than in AC because no information carried through the signal (frequency, phase)
- There are stability issues due to DCDC conversion stages
- It is more difficult to clear fault currents: the signal "does not go through zero". Hence protections are more costly and harder to set up.

A first microgrid demonstration Lab visit

Assignment

By teams of 2, write a little report and draw an electrical diagram of the demonstration board:

- wiring diagram
- protections
- equipment ratings (voltage, current, power)
- types of controllers and regulations
- cable sections
- try to get some datasheets to understand how components work, can do and cannot do