Collecting French Smart Meter Data for Residential Flexibility

Benoit Couraud[1,2], Pierre-Jean Barre[2], Roberta Pennucci[2], Yann Rozier[2], Merlinda Andoni[1], Sonam Norbu[1], Erwin Franquet[2], David Flynn[1]
[1] James Watt School of Engineering, University of Glasgow, Glasgow (UK)
Email: {benoit.couraud, merlinda.andoni, sonam.norbu, david.flynn}@glasgow.ac.uk
[2] IMREDD, Universite Cote d'Azur, Nice (France)
Email: {benoit.couraud, pierre-jean.barre, roberta.pennucci, yann.rozier, erwin.franquet}@univ-cotedazur.fr

***Abstract*—Most of western countries have successfully deployed smart meters and are now in a phase of exploration to regulate and leverage the use of smart meter data. In France, the Linky smart meter provides data locally to the end-users close to real-time, whereas it also makes 30 minutes data available to third party servers on the following day, which is inappropriate for operational energy services applications. In this work we detail the design of a full plug and play solution named Linky TIC Reader (LTR) to locally collect data from the French smart meter and make it available to end-users and to third party energy services providers in close to real time. This work demonstrates how we can democratize access to critical energy demand data, as to create intelligent energy demand profiles for the multi-objective optimization of consumer and electrical network constraints, with increased adoption of low carbon technologies. Furthermore, this article describes several applications of the LTR in residential flexibility procurement, including flexible load identification, flexibility events settlement or load control.**

***Index Terms*—Load Analysis, load management, residential flexibility, smart grids, smart meter**

I. Introduction

The energy transition requires shifting residential energy usages to electric technologies, such as electric vehicles (EV) and heat pumps (HP) [1]. In parallel, the increase of gas prices has led many buildings, shared properties and homes to shift from gas based heating systems to electric heaters. However, electric distribution network operators (DNO) cannot always reinforce the grid locally to enable this power increase. In this case, end-users are often not allowed to increase their maximum power subscription, and the transition to electric heating requires them to manually switch off some other electric appliances when the heaters are turned on. Similarly, residential flexibility might also be required by the grid operators to prevent grid congestion. Such flexibility can be triggered either directly by the DNO, who can leverage the smart metering infrastructure to disconnect households that are in a highly constrained location, or by aggregators and energy services providers who can use smart devices at the households premises to provide energy services [2], [3]. Finally, residential flexibility can also be controlled directly by the end-users without any third party's intervention, in which case it can be done manually or automatically through smart devices. All these levels of flexibility control require the use of a device such as a smart meter to monitor and communicate the house's overall power.

In this paper, we focus on the case of France, that has already deployed more than 35 million of its smart meter *Linky*. As France is now working on regulations of smart meters' data usage [4], this paper first presents a computationally efficient and robust technology for collection and analysis of smart meter data. Second, the paper presents several applications of Linky's real-time data in the context of residential flexibility procurement as required by the energy transition.

Section II describes the current context and need for flexibility at households level. Then, Section III presents a solution to collect and make available the French smart meter real-time data. Finally, Section IV discusses the use of the proposed solution for residential flexibility.

II. Smart Meter enabled Flexibility

A. Needs for Residential Flexibility

The electrification of transport and heat will strongly impact the distribution network in terms of voltage excursion and excessive network cables heat at specific times of the day. To visualise these impacts, we ran power flow studies on the standard European Low Voltage network feeder [5] for different deployment rates of EVs and HPs. Households and EVs load profiles used are minutely data that come from ReFLEX, the UK largest smart local energy system demonstrator in the Orkney Islands, that monitored over 140 EVs; whereas HP load profiles came from the large scale trial "Renewable Heat Premium Payment Scheme" [6] that monitored hundreds of heat pumps. The average daily number of minutes with voltage excursions (below the lower voltage limit) was recorded and is displayed in Fig. 1 as a function of the deployment rate of EV and HP. It shows that some neighbourhoods might experience more than one hour per day of local voltage constraints. These constraints could either be solved by expensive grid reinforcement, or by residential flexibility coordinated by a third parties (Distribution System Operators and aggregators).

Along with the energy transition, the gas prices' increase has led several households with gas heating to change for electric heating without being given the possibility to increase

979-8-3503-9678-2/23/.00 ©2023 IEEE

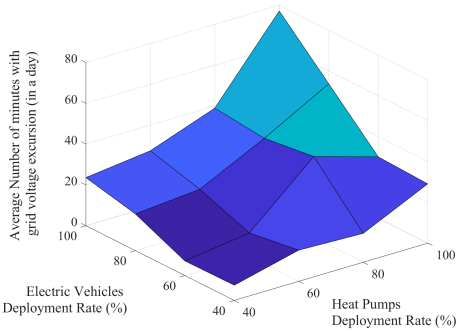

Fig. 1. Simulated average number of minutes in a day with Low Voltage network voltage excursions in a European neighbourhood.

their maximum power subscription to cover the load increase in Winter. Therefore, several households have experienced instantaneous power cut due to excessive power consumption. This can be seen in Fig. 2 where an apartment with a 6kVA subscription was disconnected from the grid at 18:44 by the smart meter circuit breaker due to a power consumption excess from electric loads including water storage heater, space heaters and cooking plates. A similar issue could also be faced by households acquiring an EV, as shown by the purple curve in Fig. 2). Such situations could be avoided thanks to households flexibility enabled by real-time smart meter data.

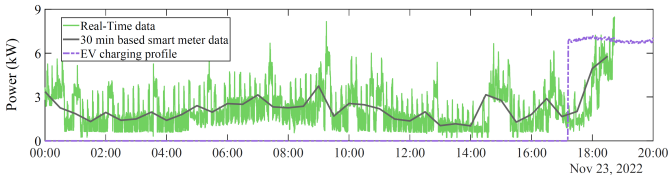

Fig. 2. Example of an EV charger load curve and of a winter's household electric load with a power subscription of 6kVA, and disconnection at 18:44.

B. French Smart Meter Characteristics

The French smart meter Linky provides two types of data that are shown in Fig. 2. One (in grey) with a 30minutes time interval, that is automatically sent at a remote concentrator of the French DSO through power line communication [7], and that is made available to the end-users on the following day, making it inappropriate for use in operational decisions for electric flexibility. The other type of data is real-time data available locally at a time granularity below 5 seconds through connectors of the smart meter named the TIC (Tele-Information Client) and visible in Fig. 4. However, collecting this data requires an additional electronic device to decode the TIC data and send it to a back-end that would be able to inform the end-users of load power excess or to control smart appliances. Although such device can theoretically be supplied directly by the smart meter itself, it is made complicated by the fact that Linky only provides an AC signal of $6V_{rms}$ at 50kHz with a minimum power of 130mW [8], which is very low to supply an electronic device that aims to send data in real-time to a web service through an internet or a LoRa connection.

This section demonstrated the need for real-time monitoring of households' load consumption in order to provide residential flexibility. The next section describes the design of a Linky TIC Reader (LTR) which supports real-time control of local assets such as heating devices or electric vehicles.

III. Solution for French Smart Meter Data Collection

The main design constraints of the Linky LTR are the available power supply and space. The power supplied by Linky for a LTR is slightly greater than 130mW, whereas the minimal power requirement to send any message is between 400 and 560mW over a few seconds for WIFI protocol, and between 60 and 400mW for LoRa communication. Therefore, the main approach for a LTR is to store energy in a large supercapacitor, and to power up the LTR when there is enough energy to read Linky's data. Then, if the energy is large enough for data transmission, the LTR can send data to a third party web service through an API. It is therefore necessary to consider four main operations: first, the charging phase of a supercapacitor, that occurs every time the other operations have emptied the capacitor, second the recording phase, that aims to read data from the smart meter. Third, the action phase, that consists in switching on or off flexible assets directly connected to the LTR in case of high household power consumption, and finally the communication phase that sends data to a remote third party for energy or non-energy services.

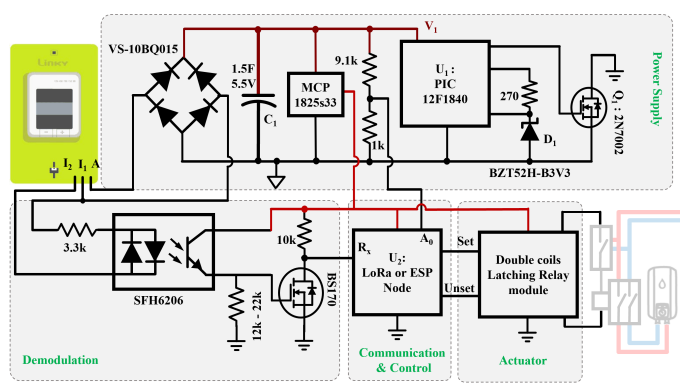

Fig. 3. Global schematic of the LTR that controls a water storage heater.

A. Architecture of the LTR

The LTR is composed of 4 main elements. The power supply, the demodulation, the communication and control, and the actuator modules. The links between all of these elements and their schematic is proposed in Fig. 3. Because WIFI constraints are higher than for other protocols, the rest of the paper focusses on a WIFI version that is fully replicable in a LoRa or GSM configuration. Each one of the four elements presented in Fig. 3 are described in the next subsections.

B. Demodulation Module

The demodulation module aims to demodulate the signal that is made available by the Tele-information Client (TIC)

connector of Linky smart meter. It adopts a well-adopted optocoupler based architecture that is already available to purchase on the market, and will therefore not be described here. We highlight however that there are two versions of the French smart meter, that communicate either at 1200bps or at 9600bps, which require a demodulator resistor value of 22kΩ or 12kΩ respectively, as shown in Fig. 3.

C. Actuator

The actuator aims to connect or disconnect a flexible load depending on the household's power consumption. It consists of a latching relay similar to the one in [9] with two coils in order to limit the power consumption from the control module. Small loads can directly be connected to the relay, whereas large loads require the use of an intermediary circuit breaker as it is done for peak/off-peak hours circuit breakers [10] and shown in Fig. 3.

D. Power Supply Module

Although it is possible to directly supply the demodulation and communication modules using a USB power adaptor with an electric plug from the house distribution board, this paper focusses on the design of an integrated solution that directly powers from the smart meter and that would fit in any household configuration. The power supply aims to rectify the AC power available, to charge a supercapacitor that acts as an energy tank and to connect this supercapacitor to the rest of the circuit (i.e. the demodulation, communication and actuator module) through the MOSFET Q_1 (right side of Fig. 3) when C_1 is enough charged. The indication that the supercapacitor is charged enough is given by its voltage ($V_1 = \sqrt{\frac{2E}{C_1}}$), which is monitored by the power supply module and used to decide to supply or cut off the rest of the circuit. Although there are not many other options, using V_1 as the main indicator to supply or not the rest of the circuit brings a great challenge: indeed, although V_1 increases when the rest of the circuit is not connected, it will then directly decrease rapidly once the circuit is connected, which will lead to a disconnection of the rest of the circuit before it was able to finish its operation. Therefore, there is the need for a hysteresis control loop such that the connection of the rest of the circuit through Q_1 is triggered at a high voltage threshold for V_1, and it should be kept switched on until V_1 decreases below a much lower voltage threshold.

Although a Schmitt trigger could provide such hysteresis control in theory, it can not work correctly in the case of Linky as the trigger's input voltage would be directly proportional to its supply voltage (i.e. V_1, the voltage at C_1 output). Therefore, we chose to use a low power microcontroller U_1 to control the voltage of the hysteresis and to control the supply of the rest of the circuit through the switching of Q_1. The microcontroller implements the following logic: if the capacitor voltage has been above 4.5V for at least 20 consecutive cycles (with a low clock frequency of 1MHz), the switch Q_1 is switched on. This connects the ground voltage level of the communication module with the ground level of V_1, which will supply the communication and control module with the 3.3V voltage regulator (MCP1825). The switch Q_1 is kept switched on until the voltage V_1 drops below a threshold of 4.1V for at least 200 cycles. As the microcontroller U_1 is directly supplied by V_1, which is also the voltage that it aims to monitor, this voltage measurement has to be done by an analog input of U_1 that measures the voltage at the end of a 3.3V Zener diode D_1. The total cost for a single power supply module is below 13€.

E. Communication and Control Module

In normal operation, the communication module of the LTR achieves three main purposes. First, it wakes up from sleep mode and reads Linky data made available at the output of the demodulation module and stores it in an internal EEPROM memory before going back to sleep mode to save energy. Second, before going back to sleep: 1. If a load is connected to its actuator, the LTR takes the decision to switch on or off the actuator (which connects/disconnects the flexible electric appliance such as water storage heater or EV) based on the instant power consumption measured by the smart meter: if the house power consumption is greater than a predetermined threshold based on the household's power subscription, it is urgent to switch off flexible appliances. 2. Similarly, in the case where some flexible appliances are remotely controlled by a third party service, the communication module will send a *switch off* request through WIFI or LoRa to the third party web service regardless of the energy quantity stored into the supercapacitor C_1. This will allow the third party service to put back the household to safe electric consumption by remotely switching off their smart appliances such as EV chargers. Finally, regardless of the household power consumption value, if the voltage V_1 is high enough, the communication module connects to a registered WIFI network and sends all the previously recorded data to a remote server (e.g. third party web service).

Before achieving this normal operation mode, the communication module must be configured in order to connect to the right WIFI SSID and to store the web addresses to which data should be sent. This is done at the initialisation phase of the LTR by having the communication module set up in Access Point mode with an internal web server stored to get the user's inputs to successfully connect to an existing WIFI.

In order to propose an open source design that anyone could reproduce and install at their household, we worked with the compact, fully democratised and easy to use ESP8266 based WEMO D1 mini Lite boards, that can be purchased for less than 10€. One of the main advantage of such boards is that many libraries have been developed to help the implementation. More specifically, such boards have all the Transport Layer Security protocols available in dedicated libraries. Therefore, this choice allows an easy implementation of security layers to safely connect to https servers. For what concerns security aspects, we have configured a Wificlient secure instance to set trust anchors (third party servers) using their real https certificates delivered by a root SSL certification

authority. The drawbacks of using secure connection to remote servers are discussed in Section IV.

Fig. 4. Integration of the WIFI based Linky TIC Reader (LTR) in a smart meter.

F. Experimental results

The LTR was implemented, tested and deployed in several households for a period of over 6 months. Fig. 2 displays the data captured by one of the LTR in green. The main learning from this implementation mostly concerns the time interval between two consecutive data transmission. Table I shows the time interval between two consecutive transmission events to a remote server in the case of a secure connection (https) and in the case of an unsecure connection.

TABLE I
IMPACTS OF SECURITY LAYERS ON LTR DATA TRANSMISSION.

Operation mode	**time interval between 2 transmissions**		
	mean (s)	max (s)	min (s)
with security layers	54.6	140	20
without security	33	68	19

Because of the required security layers, it takes more time for the LTR supercapacitor to retrieve an acceptable voltage level allowing the LTR to send data again (see Table I).

The final result of an LTR implementation is displayed without packaging in Fig. 4, with a single unit price below 30€. All the schematics and codes to reproduce this Linky TIC Reader (LTR) are available as open source documentation from the github repository referenced in [11].

IV. USE OF LTR FOR RESIDENTIAL FLEXIBILITY

LTR can be used to support residential flexibility either in the context of an isolated household that would use the LTR to limit the overall power to the subscribed maximum power through direct control of a large flexible asset such as a water storage heater connected to the LTR actuator, or in the context of an aggregator that coordinates the flexibility of many end users. This section mainly focuses on the second use case: residential flexibility coordinated by an aggregator.

Tasks that a flexibility aggregator must carry to obtain efficient flexibility include the clustering of end users to identify those who can actively contribute to a Demand Side Flexibility (DSF) event, the forecast of their consumption or their flexibility potential, the remote control of flexible appliances, and finally the settlement for which the aggregator determines the flexibility effort provided by end-users. We discuss here how the LTR can help residential flexibility.

1) Load analysis for customers clustering: Aggregators aim to identify flexible assets consumption patterns at the end-users premises, to better understand how they can provide energy services. This can be done by conducting surveys or by monitoring several dedicated assets (EV chargers, heating devices, ...), which comes with a cost. In this work, we investigated the possibility to use LTR data to identify flexible loads usage within a household (time of EV chargers connection, use of water storage heater). To do so, we installed a standard LTR and a LTR with external power supply (to obtain a higher data collection frequency, as a reference) in a real household with an electric water storage heater, a washing machine, and electric cooking devices (oven and cooking plates). Based on the data collected, we used Non-Intrusive Load Monitoring (NILM) state of the art algorithms to disaggregate the water storage heater.We ran the disaggregation study for data time intervals ranging from 10s, 30s and 55s to study the impact of security implementation on the feasibility to use LTR data for load analysis. Fig. 5 shows the Root Mean Square Error (RMSE) for identification of the water storage heater load in the considered household based on 6 weeks of data with a short period of calibration during which only the water heater storage appliance was connected to the mains. We can see that for each algorithm, the identification error is similar for all data transmission time except in the case of the Sequence to Point algorithm. Fig. 6 shows the output of load disaggregation FHMM algorithm for 10s granularity data, which shows that algorithms are able to accurately detect the water storage heater. However, such results were obtained while the number of loads was still low, i.e. without any other heating device, which would require a much more consequent calibration phase. Therefore, the use of LTR and NILM flexible load identification is relevant from a technical point of view, as algorithms manage to accurately disaggregate loads, but they require an important calibration phase that might not be compatible with a residential setup.

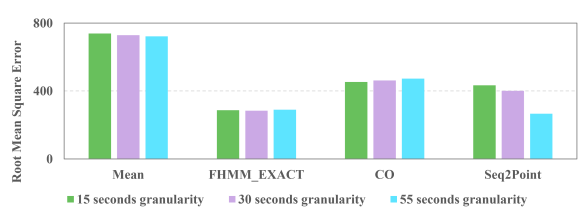

Fig. 5. Comparison of RMSE for 4 state of the art NILM algorithms used for different frequency of data transmission (15, 30 and 55 seconds).

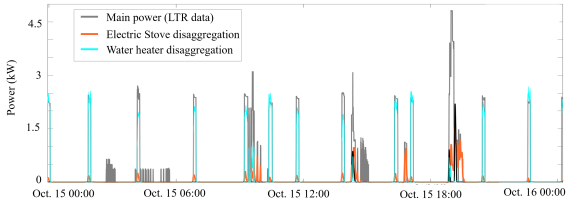

Fig. 6. Timeseries results of FHMM disaggregation algorithm along with LTR data.

2) Households load forecasting: An aggregator aiming to aggregate households to provide local flexibility in a constrained LV network might have to compute load forecasting at a household or a street level. It was reminded in [12] that load forecasting algorithms for individual households provide very low accuracy. However, accuracy also depends on the level of time aggregation, as a 30 minutes load profile (48 data point per day) will be much more complex to forecast than a load profile with a 4 hour aggregation (6 data point per day). In this paper, we used LTR data from experimentations held by the French Chair *UX for Smart Life* to investigate the impact of time aggregation on load forecasting accuracy for a single household. Therefore, we aim to compare the accuracy of an household's energy consumption forecast with hourly data to the accuracy of a forecast based on daily data. For the comparison, we used k-Nearest Neighbours algorithm as it is known for its good compromise between accuracy and speed. This benchmark was realised over a period of 6 months of data, and the r^2 metric was used to compare accuracies.

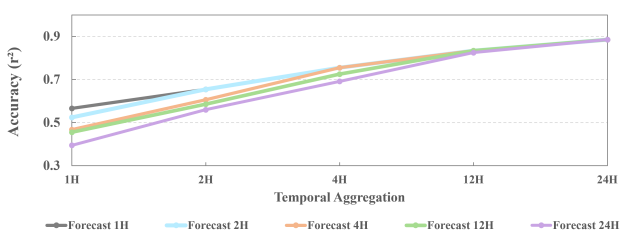

Fig. 7. Accuracy (r^2) for prediction of a single house load profile for different levels of data aggregation and different forecast horizon.

Fig. 7 shows that the accuracy increases considerably with the time aggregation of data. This outcome could inform the design of a local flexibility market on the required time interval for bids to solve a specific grid constraint. Indeed, this study shows that an individual household's load forecast with time aggregation below 4 hours might lead to high load forecast errors (only 70% of r^2 accuracy), which makes it unsuited for local flexibility markets with clearing time intervals below 4H.

3) Remote control of flexible loads: As discussed in Section III, flexible assets can be controlled manually, or by a dedicated smart appliance using specific protocols such as OCPP for EV chargers, or by an LTR that would switch on or off a flexible asset such as an EV charger or a water storage heater.

4) Flexibility Settlement: Finally, the assessment of the flexibility effort from the end-users is required to settle a DSF event. This necessitates to compare the actual load to a virtual baseline. An approach adopted in the UK consists in the comparison of the actual consumption with an average consumption (based on 30min data) over several days prior to the time of delivery, called the baseline [13]. Adding capabilities such as the ones described in Section IV-1 to these basic schemes could help to better identify actual flexibility efforts based on assets switching and not only on load reduction.

V. Conclusion

This paper first described the relevance of smart meter data and residential flexibility to enable the energy transition. It then described an open-source plug-and-play solution to read and send French smart meter data to third party energy services to control flexible assets and provide flexibility services. The main aim of this paper was to provide a full access to such solution and to democratise access to residential flexibility, which could certainly help to support the necessary energy transition. Finally, several usages of LTR for residential flexibility were described, showing that it can be used by aggregators to better identify flexibility loads or to help in the flexibility settlement phase. Further work will include a more detailed study on the use of LTR data for baseline and flexibility effort computation in residential flexibility.

Acknowledgment

This paper was funded by the French partnership Chair *UX for Smart Life: Home and Mobility* from UniCA, and by the UK EPSRC DISPATCH project (EP/V042955/1).

References

[1] T. Veyrenc and O. Houvenagel, "Energy Pathways to 2050," https://www.rte-france.com/analyses-tendances-et-prospectives/bilan-previsionnel-2050-futurs-energetiques-Lesdocuments, 2022.
[2] Voltalis, a solution for energy savings. (2023). [Online]. Available: https://www.voltalis.com/
[3] Charge angels: open source e-mobility and smart charging solution. (2023). [Online]. Available: https://chargeangels.fr/
[4] Cre, définition du nouveau cadre de regulation du projet linky. (2022). [Online]. Available: https://www.cre.fr/Actualites/la-cre-definit-le-nouveau-cadre-de-regulation-du-projet-linky
[5] IEEE, "IEEE PES Test Feeder, European Low Voltage Test Feeder," https://cmte.ieee.org/pes-testfeeders/resources/, 2022.
[6] Lowe, R, "Renewable Heat Premium Payment Scheme: Heat Pump Monitoring: Raw Data 2013-2015," https://beta.ukdataservice.ac.uk/datacatalogue/doi/?id=7955!1, 2016, [Date Accessed: 2023-05-07].
[7] A. Gougeon, F. Lemercier, A. Blavette, and A.-C. Orgerie, "Modeling the end-to-end energy consumption of a nation-wide smart metering infrastructure," in *2022 IEEE Symposium on Computers and Communications (ISCC)*, pp. 1–7, 2022.
[8] Enedis, "Sorties de tele information client des appareils de comptage Linky," https://www.enedis.fr/media/2035/download, 2018.
[9] Adafruit, "Adafruit Latching Mini Relay FeatherWing," https://www.adafruit.com/product/2923, 2022.
[10] Schneider-Electric, "Contacteur heures creuses," https://www.se.com/fr/fr/faqs/FA355332/, 2022.
[11] B. Couraud, "Github Linky TIC Reader repository," https://github.com/bcouraud/Linky-TIC-Reader, 2023.
[12] Y. Wang, Q. Chen, T. Hong, and C. Kang, "Review of smart meter data analytics: Applications, methodologies, and challenges," *IEEE Transactions on Smart Grid*, vol. 10, no. 3, pp. 3125–3148, 2019.
[13] National-Grid, "P376 Baseline Methodology," https://www.nationalgrideso.com/document/279586/download, 2023.