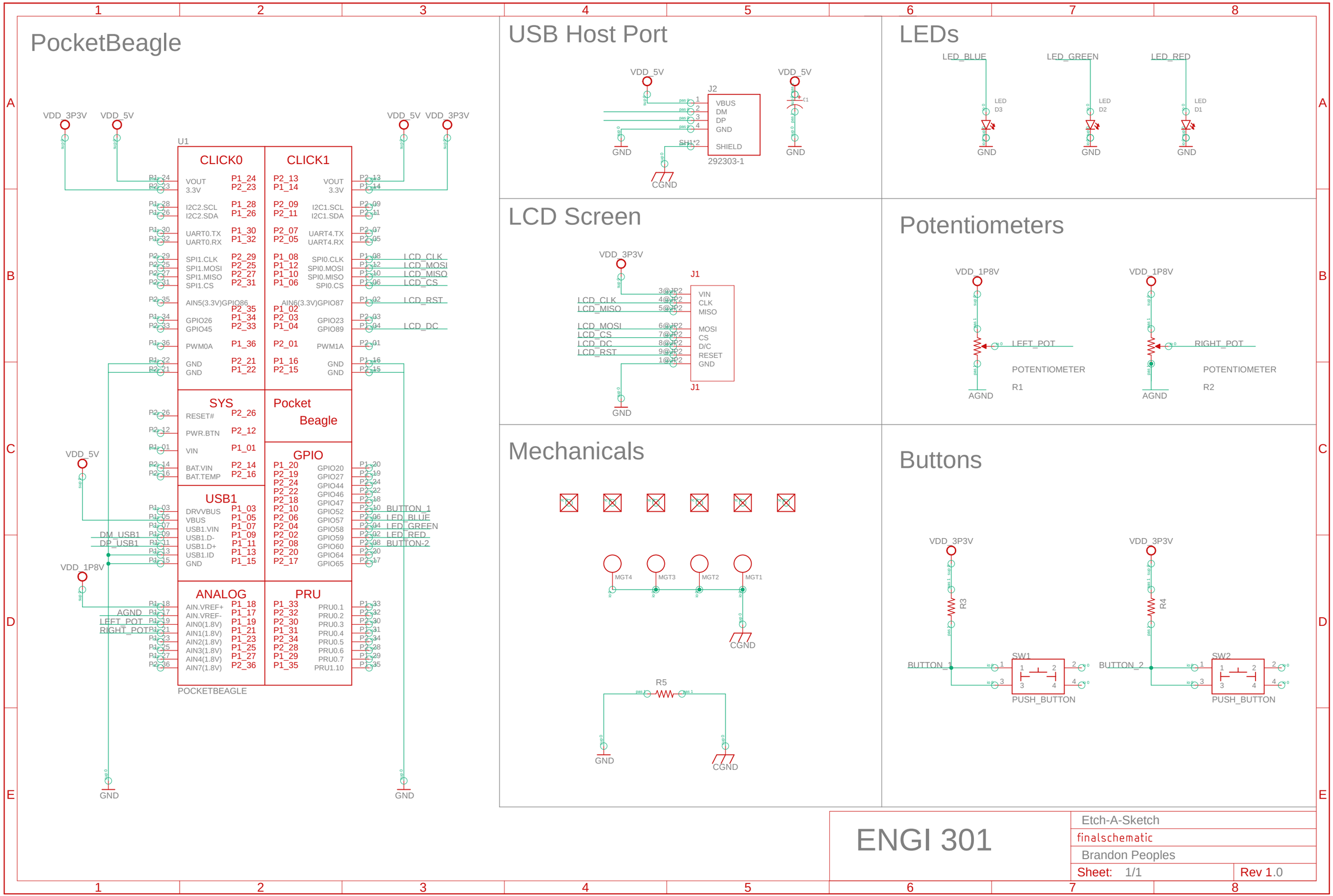

ENGI 301

Etch-A-Sketch

finalschematic

Brandon Peoples

Sheet: 1/1

Rev 1.0