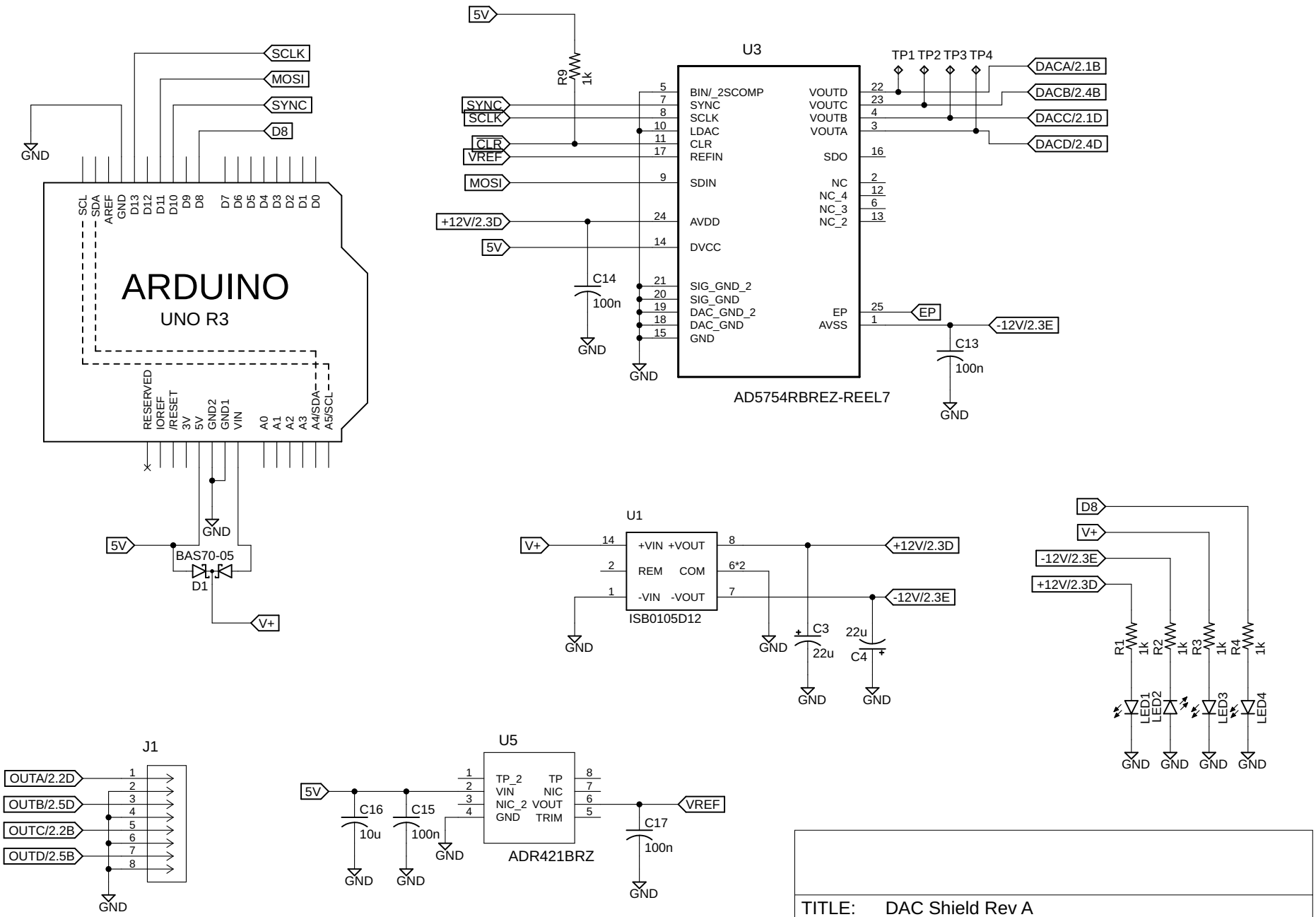

TITLE: DAC Shield Rev A	
Document Number:	REV: A
Date: 7/20/2023 3:53 PM	Sheet: 1/2

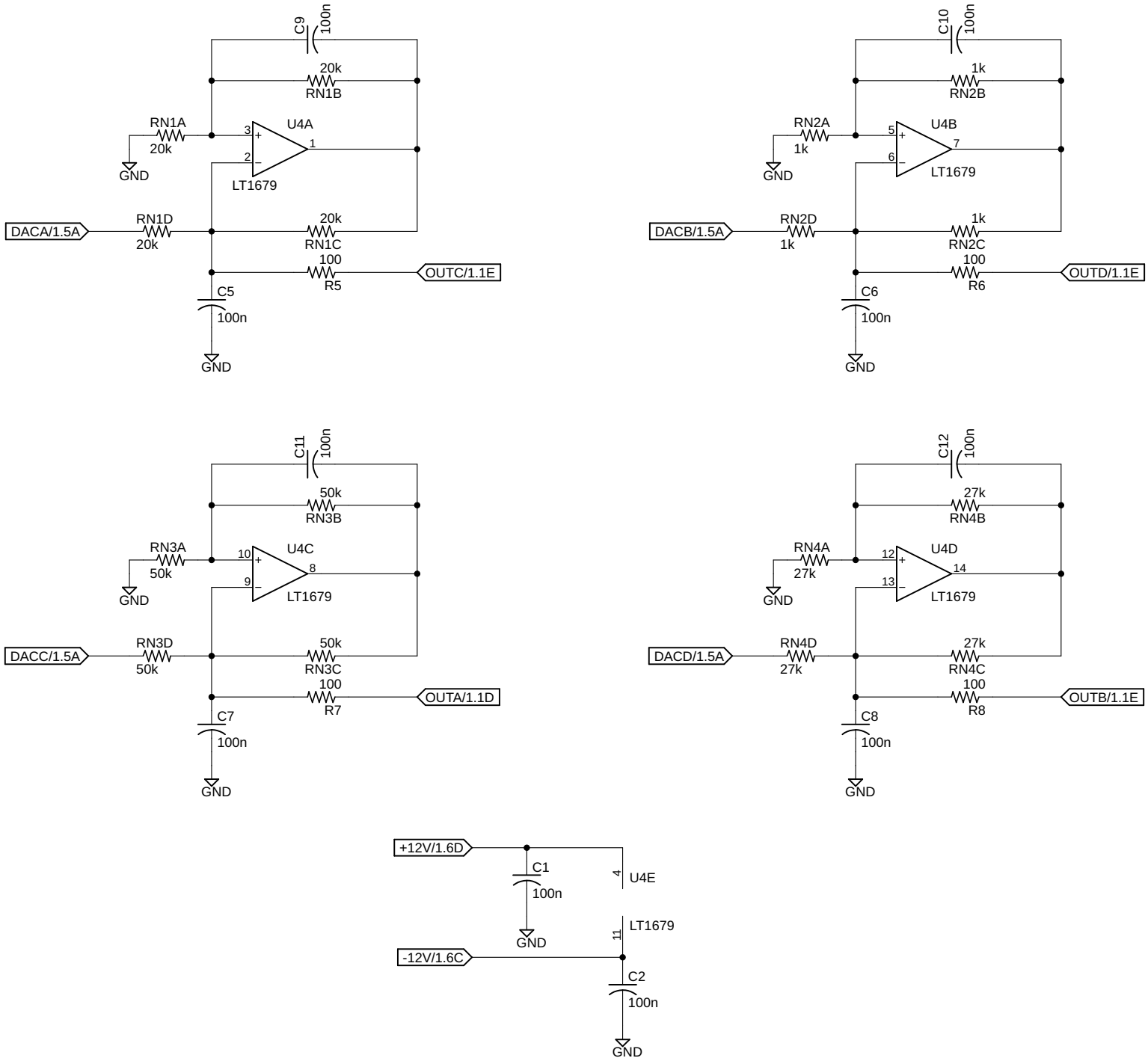
C9
100n
20k
RN1B
RN1A
20k
U4A
3
2
1
GND
LT1679
DACA/1.5A
RN1D
20k
20k
RN1C
100
R5
OUTC/1.1E
C5
100n
GND
C10
100n
1k
RN2B
RN2A
1k
U4B
5
6
7
GND
LT1679
DACB/1.5A
RN2D
1k
1k
RN2C
100
R6
OUTD/1.1E
C6
100n
GND
C11
100n
50k
RN3B
RN3A
50k
U4C
10
9
8
GND
LT1679
DACC/1.5A
RN3D
50k
50k
RN3C
100
R7
OUTA/1.1D
C7
100n
GND
C12
100n
27k
RN4B
RN4A
27k
U4D
12
13
14
GND
LT1679
DACD/1.5A
RN4D
27k
27k
RN4C
100
R8
OUTB/1.1E
C8
100n
GND
+12V/1.6D
C1
100n
4
U4E
GND
11
LT1679
-12V/1.6C
C2
100n
GND

Sheet: 2/2