CS 506: Quantum Computing

Scribe Notes: Shor's Factoring Algorithm — Everything Put Together

Jie Yang

April 15, 2026

1 Overview

This lecture presents Shor's factoring algorithm in its entirety, assembling every component developed in the course so far: classical preprocessing (Steps 1–4), quantum order-finding via U_f and the QFT (Step 5), and the final classical extraction of a nontrivial factor (Step 6). We state each step with its runtime and success probability, then analyze the total complexity.

2 Problem Statement

Input. A composite integer $N > 2$ (not prime). Let n denote the number of bits needed to represent N:

$$n = \lfloor \log_2 N \rfloor + 1.$$

Output. Integers p, q with $1 < p, q < N$ and $N = pq$, found in $\mathrm{poly}(n)$ time with success probability $\geq 12/\pi^4 \approx 0.123$.

Remark 2.1. Primality of N can be verified in $O(n^8)$ time via the AKS algorithm, so we may assume without loss of generality that N is composite.

3 The Algorithm

The six steps of Shor's algorithm are summarized below. Steps 1–4 and 6 are entirely classical; only Step 5 requires a quantum computer.

1. **Even check.** If N is even, return $p = 2$, $q = N/2$.

2. **Perfect-power check.** If $N = a^c$ for some integer $a \geq 2$ and $c \geq 2$, return $p = a$, $q = a^{c-1}$. *Runtime:* $\mathrm{poly}(n)$.

3. **Random base.** Pick $a \in \{2, 3, \ldots, N-1\}$ uniformly at random.

4. **GCD test.** Compute $g = \gcd(a, N)$ via Euclid's algorithm. If $g > 1$, return $p = g$, $q = N/g$. *Runtime:* $O(n^2)$.

5. **Order finding** (quantum + classical)**.** Find the minimum positive integer r such that

$$a^r \equiv 1 \pmod{N} \qquad (\text{the } \textit{order} \text{ of } a \bmod N,\ 1 < r < N).$$

   This is the core quantum subroutine; see Section 4.

6. **Factor extraction.** If r is even and $a^{r/2}+1 \not\equiv 0 \pmod{N}$, return

$$p = \gcd\bigl(a^{r/2}+1,\ N\bigr), \qquad q = \frac{N}{p}.$$

Otherwise, go back to Step 3. *Success probability:* $\geq 1/2$.

Computing $a^{r/2}$ mod N efficiently. Write r in binary as $r = (r_{n-1}\, r_{n-2} \cdots r_1\, r_0)_2$. Then

$$a^{r/2}+1 \;=\; \prod_{\substack{j=1\\ r_j=1}}^{n-1} a^{2^{j-1}} + 1 \pmod{N},$$

using repeated squaring. This takes $\mathrm{poly}(\log r,\, n) = \mathrm{poly}(n)$ time.

Remark 3.1. Steps 3–6 can be repeated independently to boost the overall success probability. After t repetitions, the failure probability drops to $\leq (1-12/\pi^4)^t$.

4 Order Finding: The Quantum Subroutine

Step 5 is itself a three-part procedure.

4.1 Step 5.1: Constructing the U_f Gate

We need a reversible quantum circuit for

$$f(x) = a^x \bmod N, \qquad x \in \{0, 1, \ldots, 2^m - 1\}.$$

Repeated squaring. Write x in binary as $x = (x_{n-1}\, x_{n-2}\, \cdots\, x_1\, x_0)_2$. Then

$$a^x \;=\; \prod_{\substack{j=0\\ x_j=1}}^{n-1} a^{2^j} \pmod{N},$$

where the values $a^{2^0} \bmod N$, $a^{2^1} \bmod N$, $a^{2^2} \bmod N$, $\ldots$ are computed classically in advance, each by squaring the previous one.

Circuit construction.

(a) Express the modular multiplication as a Boolean (AND/OR/NOT) circuit of size $\mathrm{poly}(n)$.

(b) Make the circuit reversible by adding ancilla qubits where needed.

(c) The result is a quantum circuit for U_f of size $\mathrm{poly}(n)$.

4.2 Step 5.2: The Quantum Circuit

Choose $M = 2^m$ with

$$2N^2 \;\leq\; M = 2^m \;<\; 4N^2, \qquad \text{so} \quad m = \Theta(\log N) = \Theta(n).$$

For each trial $i = 1, 2$, execute the circuit depicted below.

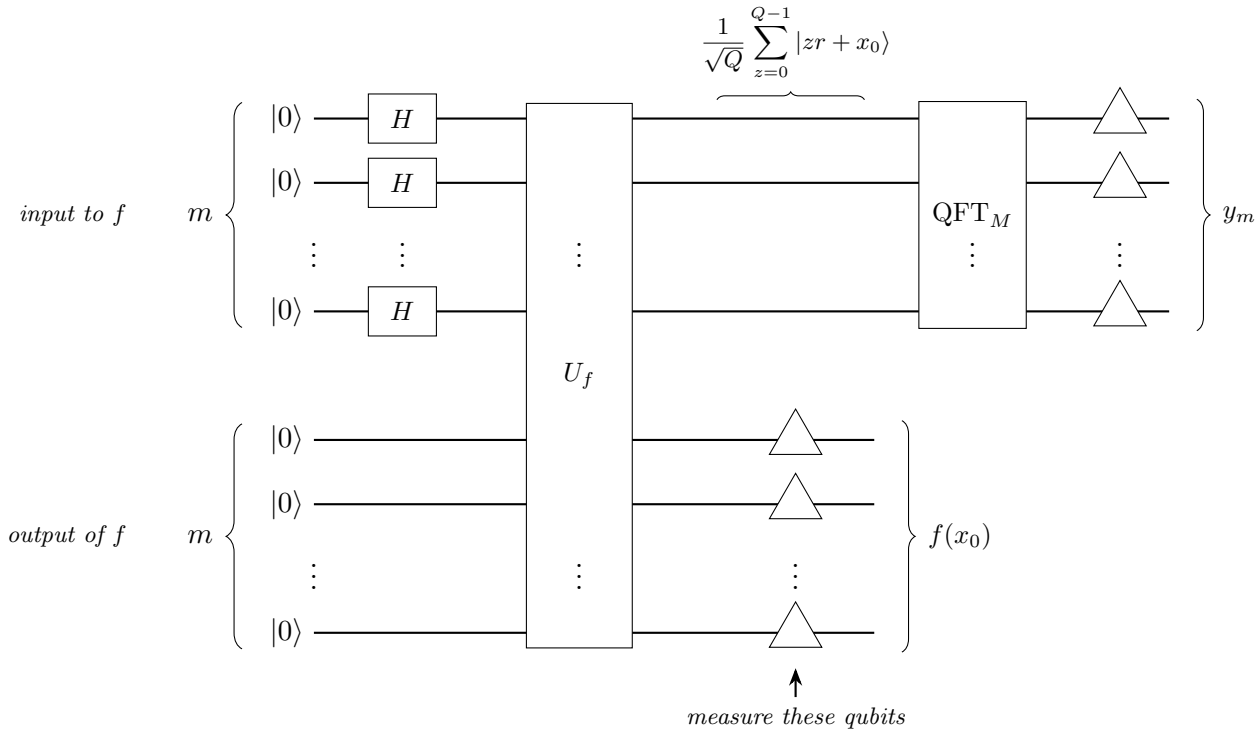

State evolution.

1. After the Hadamard layer, the top register holds $\frac{1}{\sqrt{M}}\sum_{x=0}^{M-1}|x\rangle$.
2. After U_f, the joint state is $\frac{1}{\sqrt{M}}\sum_{x=0}^{M-1}|x\rangle|f(x)\rangle$.
3. Measuring the bottom register yields $f(x_0)$ for some offset x_0, collapsing the top register to
$$|\phi\rangle \;=\; \frac{1}{\sqrt{Q}}\sum_{z=0}^{Q-1}|x_0+zr\rangle\,, \qquad Q\approx\frac{M}{r}.$$
4. Applying QFT_M and measuring yields the outcome $y_m\in\{0,\dots,M-1\}$.

Classical post-processing of y_m

The key approximation property (proved in the April 13 lecture) is:

$$\left|\frac{y_m}{2^m}-\frac{k_i}{r}\right| \;\le\; \frac{1}{2\cdot 2^m} \;\le\; \frac{1}{2r^2}, \tag{$*$}$$

for a uniformly random $k_i\in\{0,1,\dots,r-1\}$, with success probability $\ge 4/\pi^2$ per run.

Write k_i/r in lowest terms as c_i/r_i:

$$c_i=\frac{k_i}{\gcd(k_i,r)}, \qquad r_i=\frac{r}{\gcd(k_i,r)}.$$

By the Hardy–Wright theorem (see April 13 notes), the bound $(*)$ guarantees that c_i/r_i is a convergent in the continued fraction expansion of $y_m/2^m$.

Recovery procedure:

(i) Run Euclid's algorithm on $(y_m, 2^m)$ to compute the continued fraction expansion of $y_m/2^m$. This takes $O(\log N)$ steps.

(ii) Among all convergents a_j/b_j with $b_j < N$, select the one with the largest denominator b_j.

(iii) Then $a_j/b_j = c_i/r_i$, and we extract r_i.

4.3 Step 5.3: Combining Two Independent Runs

From two independent circuit executions we obtain r_1 and r_2. The candidate period is

$$r' = \mathrm{lcm}(r_1, r_2).$$

We verify by checking $a^{r'} \equiv 1 \pmod{N}$.

Claim 4.1. *$r' = r$ with success probability $\geq 6/\pi^2 \approx 0.608$.*

5 Complexity Analysis

5.1 Gate Count

Component	**Gates**	**Count**
Hadamard layer	H	m
U_f oracle	AND/OR/NOT (reversible)	poly(n)
QFT_M – Hadamard	H	m
QFT_M – rotations	controlled-R_k	$\binom{m}{2} = O(m^2)$
Total (excluding U_f)		$O(m^2) = O(n^2)$

5.2 Overall Success Probability

Claim 5.1. *A single pass of Shor's algorithm succeeds with probability*

$$\Pr[\textit{success}] \;\geq\; \underbrace{\frac{1}{2}}_{\textit{Step 6}} \times \underbrace{\frac{24}{\pi^4}}_{\textit{Step 5}} \;=\; \frac{12}{\pi^4} \;\approx\; 0.123.$$

The individual factors arise as follows:

- **Step 6** ($\geq 1/2$): the probability that r is even and $a^{r/2} + 1 \not\equiv 0 \pmod{N}$.
- **Step 5.2** ($\geq 4/\pi^2$ per run): the probability that the QFT measurement yields a y_m satisfying the approximation bound $(*)$.
- **Step 5.3** ($\geq 6/\pi^2$): the probability that $\mathrm{lcm}(r_1, r_2)$ recovers the true period r, combining two independent runs each with probability $\geq 4/\pi^2$.
- **Combined for Step 5:** $\frac{4}{\pi^2} \times \frac{4}{\pi^2} \times \frac{3}{2} = \frac{24}{\pi^4}$. (The factor 3/2 accounts for the lcm success amplification.)

Since $12/\pi^4 > 0$, repeating the algorithm $O(1)$ times achieves any desired constant success probability. The total runtime remains poly(n).

6 Summary

Step	Description	Type	Runtime / Probability
1	Even check	Classical	$O(1)$
2	Perfect-power check	Classical	$\text{poly}(n)$
3	Random base selection	Classical	$O(1)$
4	GCD test (Euclid)	Classical	$O(n^2)$
5	Order finding	**Quantum** + Classical	$O(n^2)$ gates; prob $\geq 24/\pi^4$
6	Factor extraction	Classical	$O(n^2)$; prob $\geq 1/2$
	Overall		$\text{poly}(n)$; prob $\geq 12/\pi^4 \approx 0.123$