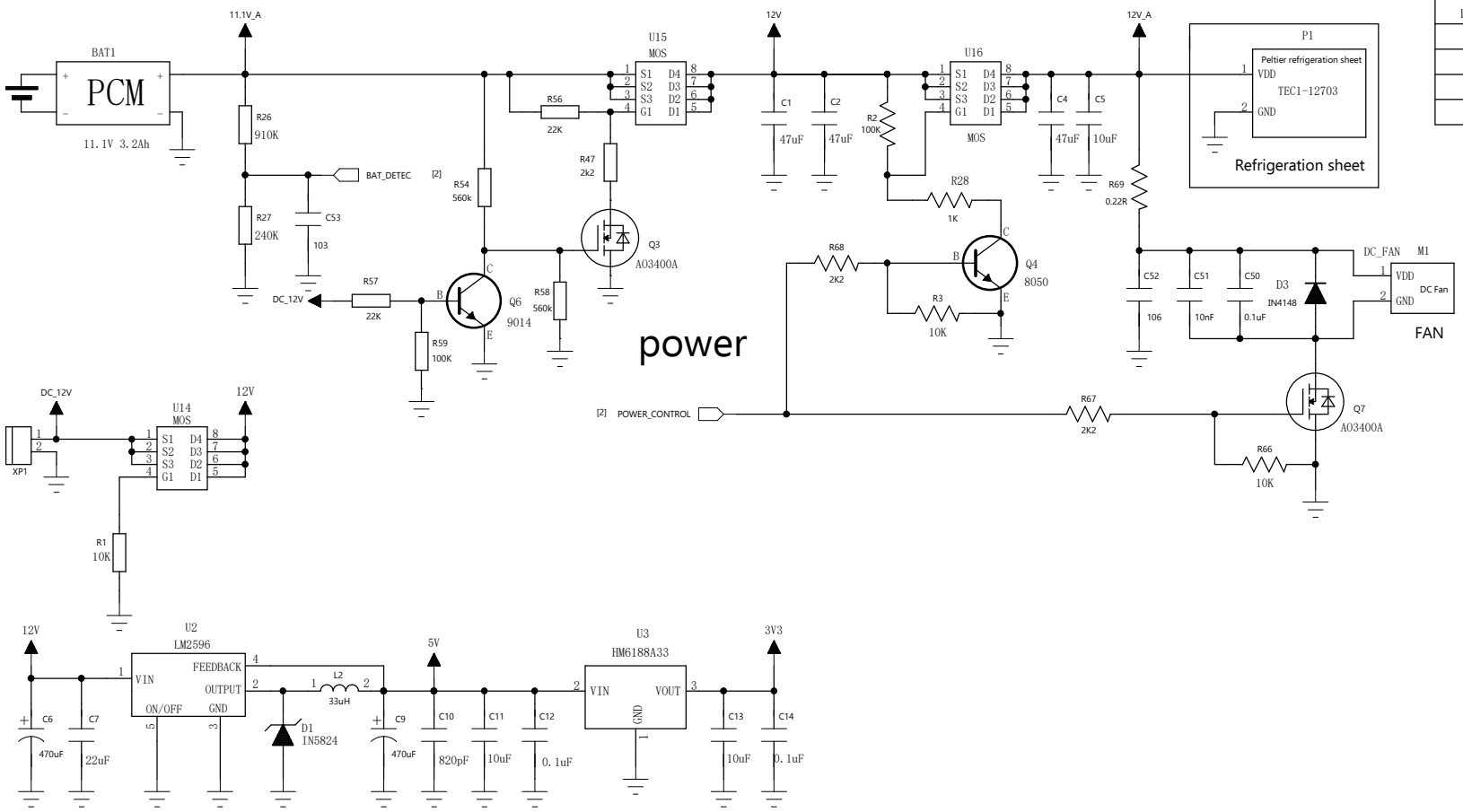

REVISION RECORD			
LTR	ECO NO:	APPROVED:	DATE:

DRAWN:	DATED:
CHECKED:	DATED:
QUALITY CONTROL:	DATED:
RELEASED:	DATED:

COMPANY:

TITLE:

CODE:	SIZE:	DRAWING NO:	REV:
	B		

SCALE:

SHEET: 1 OF 3

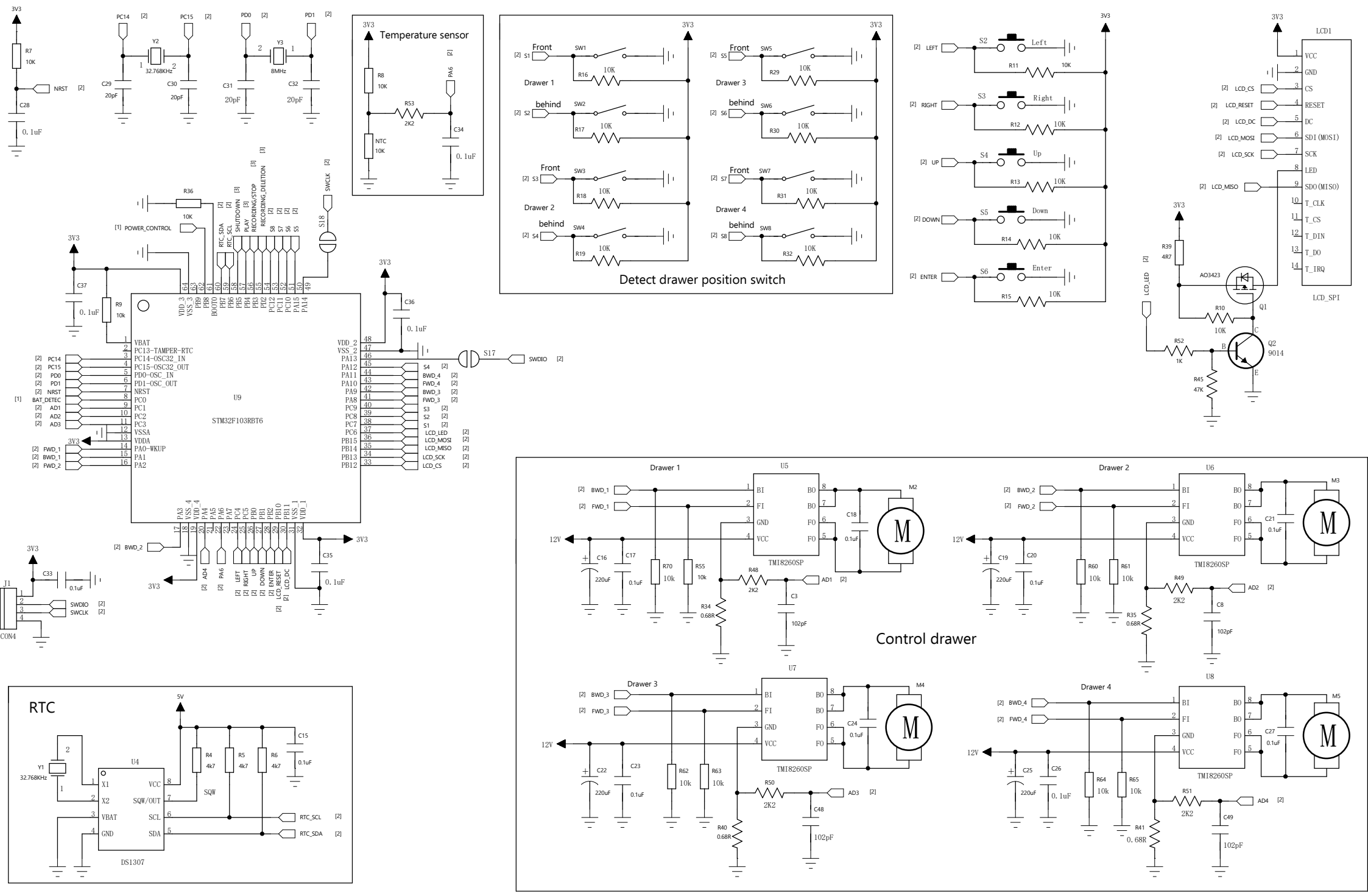
Temperature sensor
Detect drawer position switch
Drawer 1
Drawer 2
Drawer 3
Drawer 4
Front
behind
Left
Right
Up
Down
Enter
LCD1
LCD_SPI
U9
STM32F103RBT6
Control drawer
U5
U6
U7
U8
TMI8260SP
RTC
U4
DS1307
32.768KHz
8MHz
POWER_CONTROL
SWDIO
SWCLK
NRST
BAT_DETEC
RTC_SCL
RTC_SDA
LCD_CS
LCD_RESET
LCD_DC
LCD_MOSI
LCD_SCK
LCD_MISO
LCD_LED
AO3423
CON4
J1

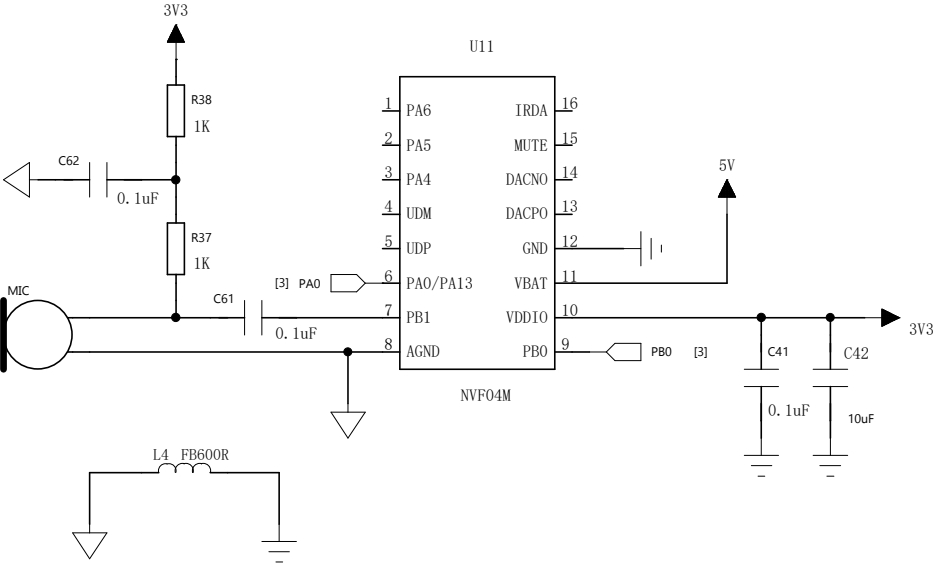
3V3
R38
1K
C62
0.1uF
R37
1K
MIC
C61
0.1uF
U11
PA6
PA5
PA4
UDM
UDP
PA0/PA13
PB1
AGND
IRDA
MUTE
DACNO
DACPO
GND
VBAT
VDDIO
PB0
NVF04M
[3] PA0
PB0 [3]
5V
C41
0.1uF
C42
10uF
3V3
L4 FB600R

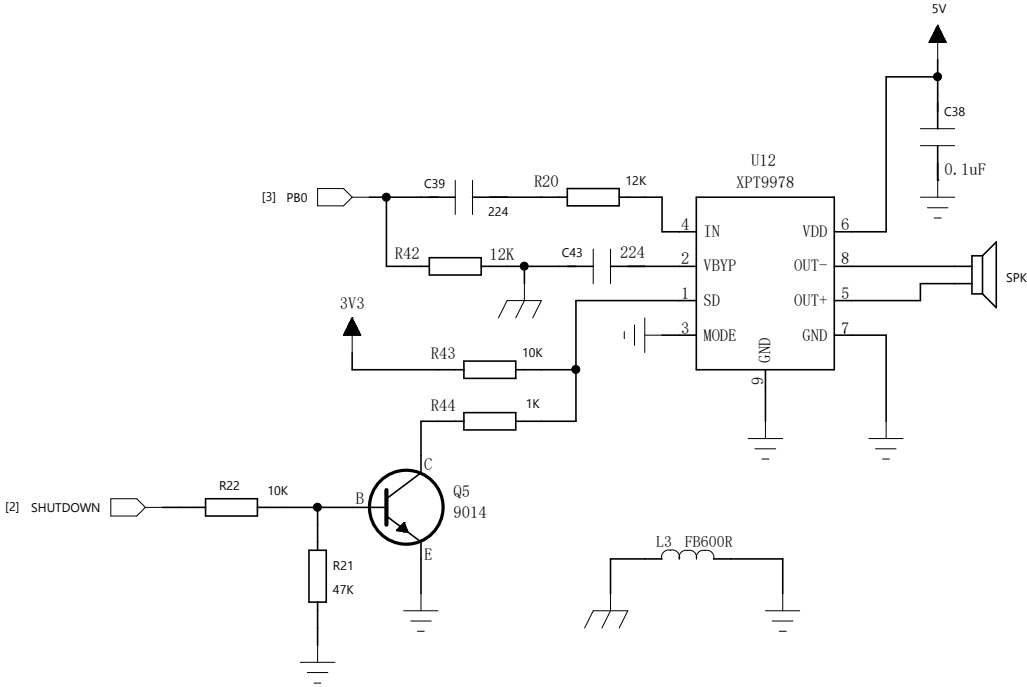
5V
C38
0.1uF
U12
XPT9978
[3] PB0
C39
224
R20
12K
R42
12K
C43
224
IN
VBYP
SD
MODE
VDD
OUT-
OUT+
GND
SPK
3V3
R43
10K
R44
1K
C
B
E
Q5
9014
[2] SHUTDOWN
R22
10K
R21
47K
L3 FB600R

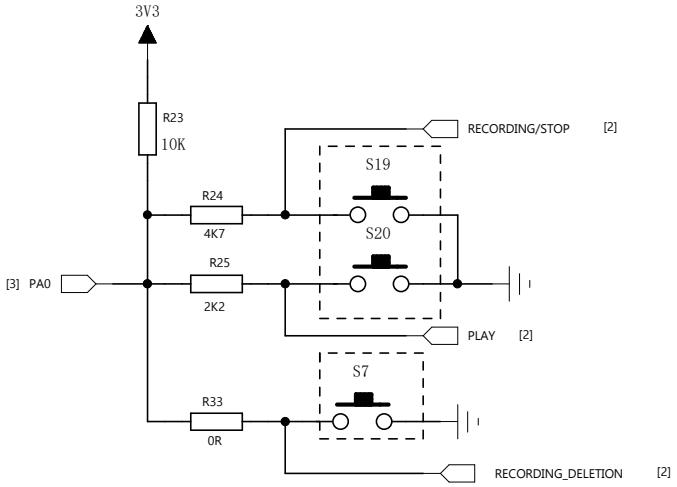
3V3
R23
10K
RECORDING/STOP [2]
S19
R24
4K7
S20
[3] PA0
R25
2K2
PLAY [2]
S7
R33
0R
RECORDING_DELETION [2]