EMERGING VEHICLE TO GRID TECHNOLOGIES

Bryce Elizabeth King

Agenda

- The Importance of Energy Storage
- Vehicle to Grid Concept
- V2G Potential
- V2G Challenges
- Bi-Directional Inverter Technology
- Battery Management Technology
- Grid Communication Technology
- Existing Models Today
- Future Prospects and Further Challenges

The Importance of Energy Storage

Energy storage plays a critical role in the integration of variable renewable resources like wind and solar as well as keeping up with growing demand from data centers

- Manage the power balance between supply and demand
- Smooth out the variable output of renewables
- Improve power quality

Save energy supply from peak generation and sell it at peak demand

The Duck Curve

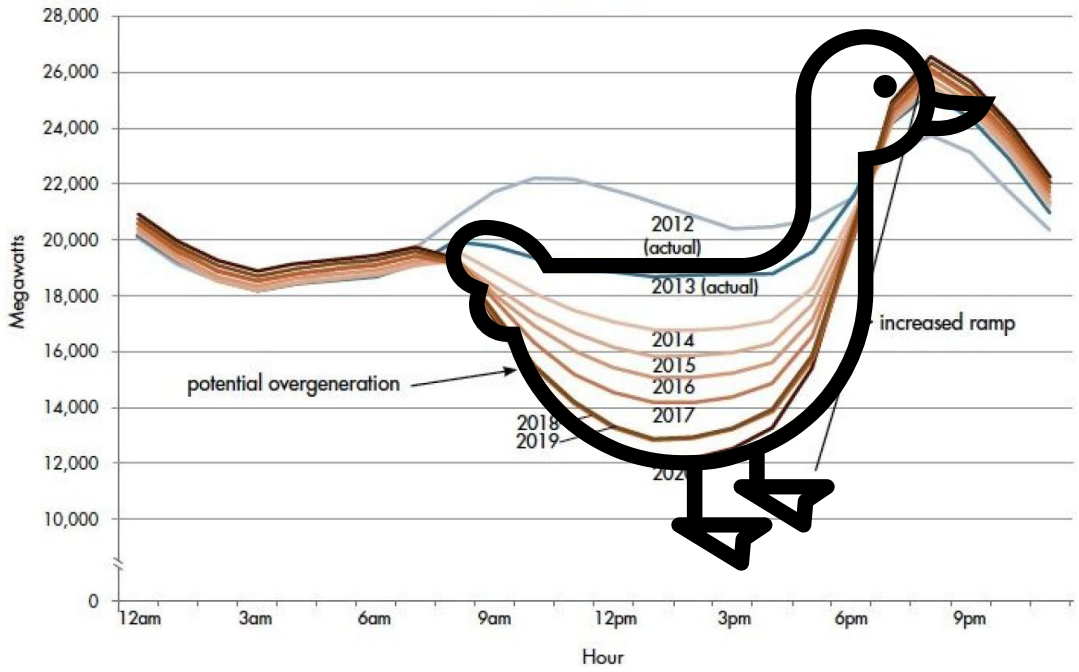

https://www.energy.gov/eere/articles/confronting-duck-curve-how-address-over-generation-solar-energy

Vehicle To Grid (V2G)

- Electric vehicles sales are increasing in the US and worldwide
  - Expected to reach 34% of the market share by 2030
- Electric vehicles primarily use Lithium-Ion Batteries like those used for distributed energy storage
- Electric vehicles could, theoretically, act as a massive force of distributed energy storage
  - Similar batteries to stationary storage
  - Doesn't require centralized capital investment
  - Naturally distributed to people's homes
  - Electric Vehicles (EVs) in the United States are typically parked and idle for about 95% of the time

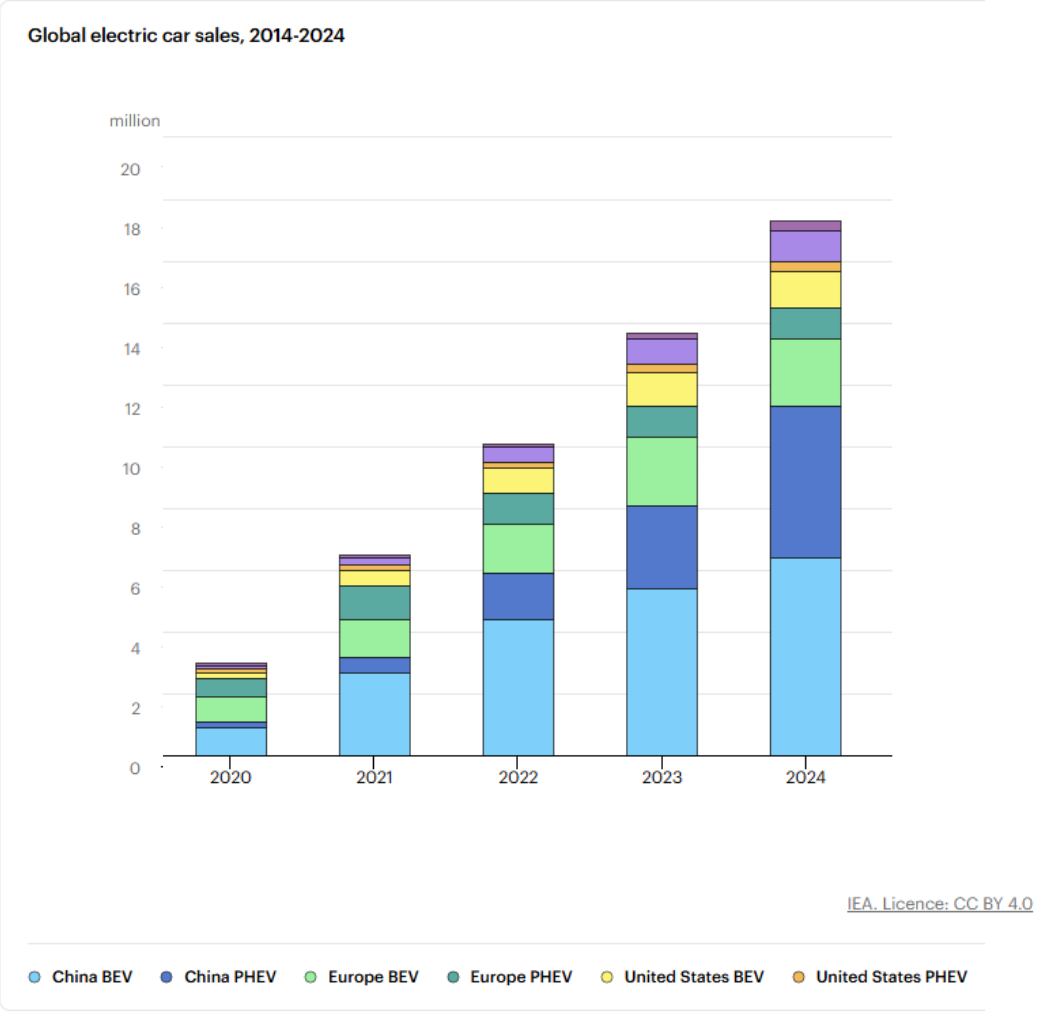

V2G Potential

- Billions of dollars could be saved in the US if electric vehicles were used in place of stationary storage
  - A single EV can hold between 20-100 kWh of energy
  - Global EV sale exceeded 17M in 2024
- Vehicle to Grid involves EV batteries providing power back to the main electric grid (or a microgrid)
- Vehicle to Building or Vehicle to Home involves EV batteries providing power for an individual building

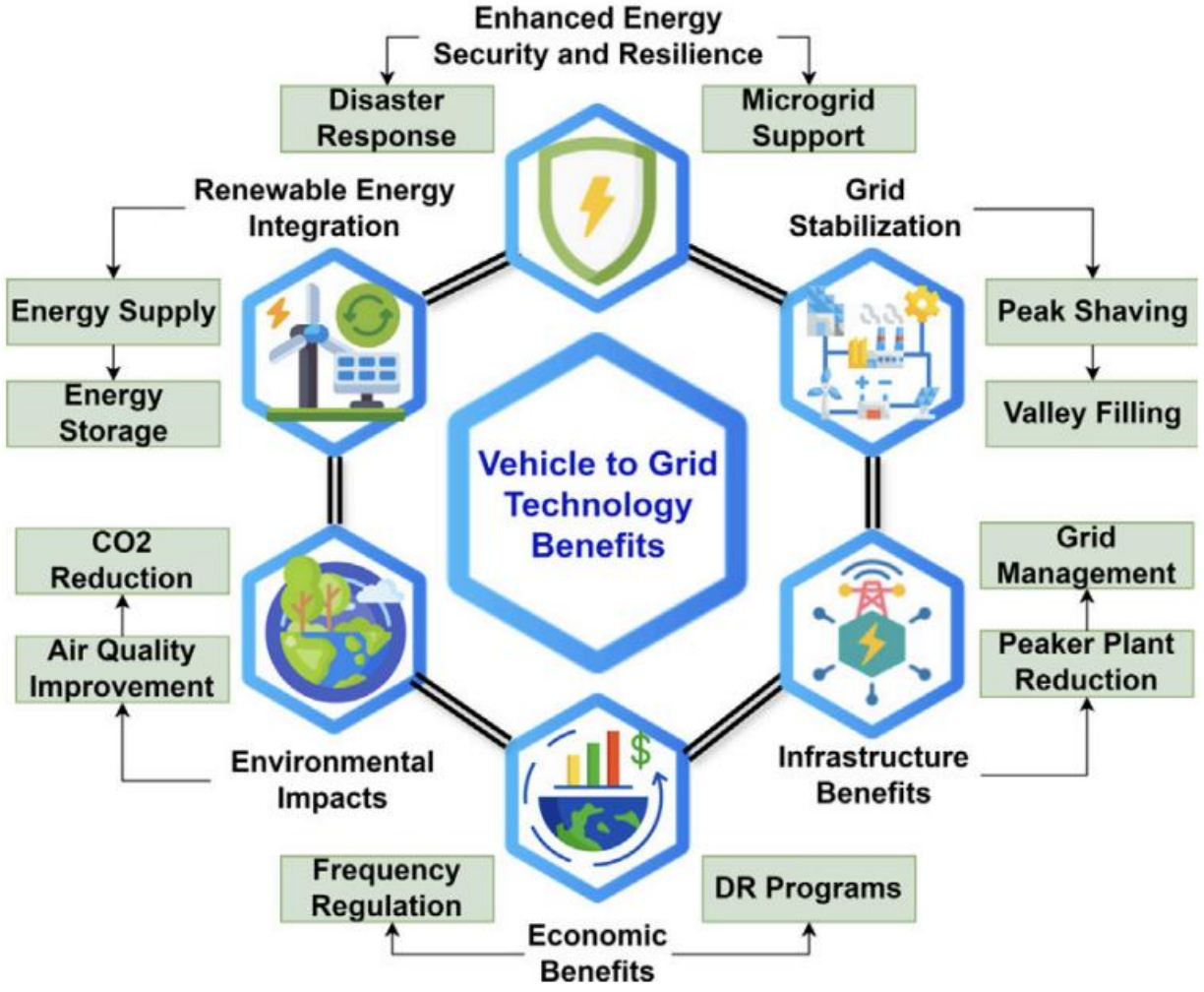

Fig. 2. Services and Benefits of V2G technology.

Rao, S. P., Olusegun, T. S., Ranganathan, P., Kose, U., & Goveas, N. (2025). Vehicle-to-grid technology: Opportunities, challenges, and future prospects for sustainable transportation. *Journal of Energy Storage, 110,* 114927. https://doi.org/10.1016/j.est.2024.114927

V2G Challenges

Technical, economic, political, and psychological challenges

- Not as easy as flipping a switch

Focus on:

- Grid integration infrastructure and hardware
- Communication Protocols
- Battery/Discharge Management

Fig. 4. Grid integration challenges.

Rao, S. P., Olusegun, T. S., Ranganathan, P., Kose, U., & Goveas, N. (2025). Vehicle-to-grid technology: Opportunities, challenges, and future prospects for sustainable transportation. *Journal of Energy Storage, 110,* 114927. https://doi.org/10.1016/j.est.2024.114927

Bi-Directional Inverter Technology

- Central functionality of V2G technology
  - Convert AC grid power to DC for EV charging
  - Invert DC battery power back to AC for grid use
- Two Stage Converters
  - Convert AC to DC
  - Convert DC to DC to step down the voltage and current and to manage the battery
  - Heavier and more complex but also more efficient

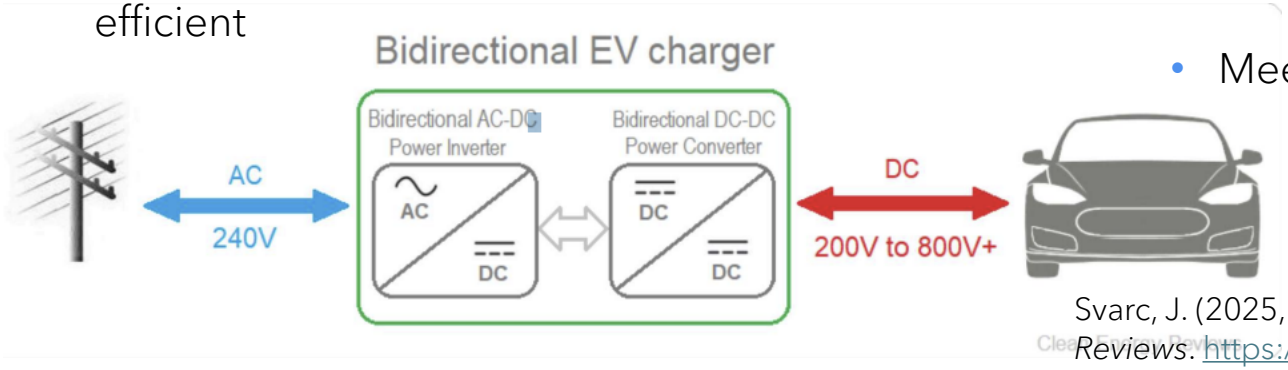

- Wide band-gap semi-conductors
  - Provide faster switching capabilities to improve grid synchronization and reduce losses
  - High cost materials (GaN) and high complexity
- Challenges
  - Increased cost and complexity compared to uni-directional charging
  - Synchronizing with grid energy in terms of phase, frequency, and voltage level
  - Meeting regulation standards (IEEE1547)

Svarc, J. (2025, June 25). *Bidirectional EV chargers review – V2G & V2H. Clean Energy Reviews*. https://www.cleanenergyreviews.info/blog/bidirectional-ev-chargers-review

Bi-Directional Inverter + Controllers

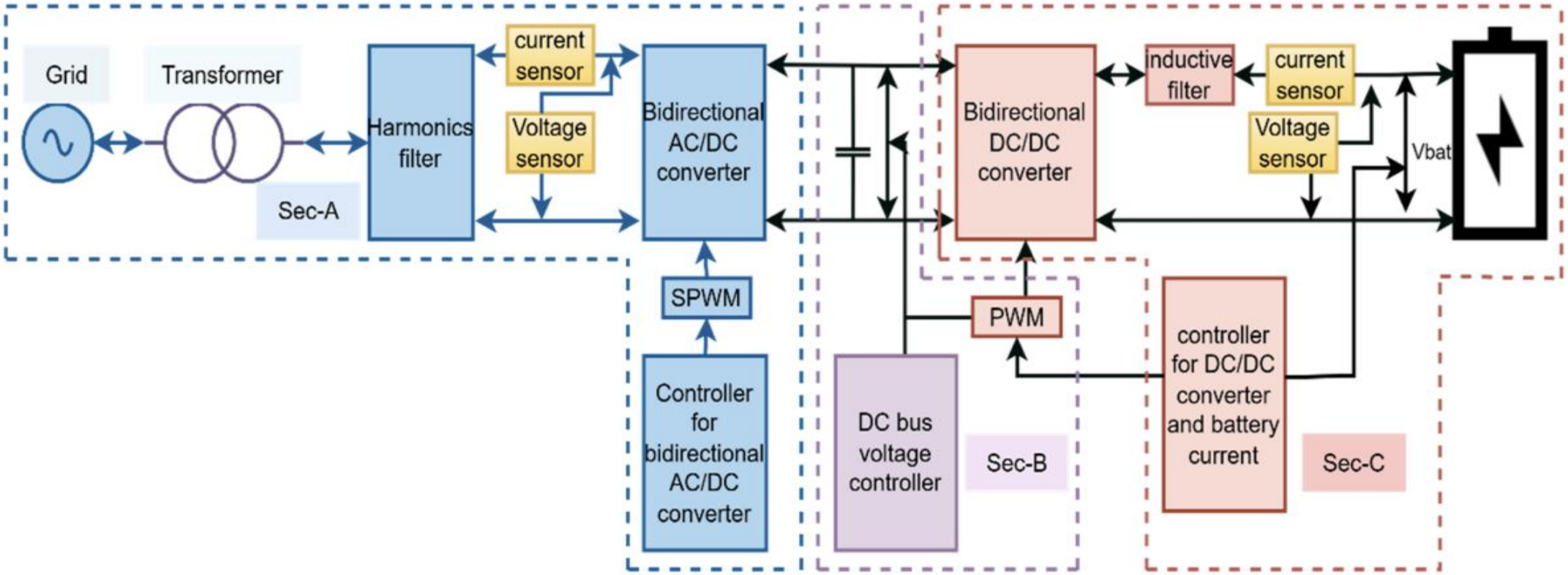

Fig. 13. V2 G Power converters and controllers.

Munusamy, N., & Vairavasundaram, I. (2024). AI and machine learning in V2G technology: A review of bi-directional converters, charging systems, and control strategies for smart grid integration. *e-Prime – Advances in Electrical Engineering, Electronics and Energy, 10,* 100856. https://doi.org/10.1016/j.prime.2024.100856

Battery Management and Control Schemes

- Battery Management Systems (BMS) manage the rate and time of charge and discharge and track key parameters like battery temperature to optimize battery life and maintain smooth charging and discharging
- AI is an emerging solution to battery management that has several applications
  - Forecasting energy supply and demand to decide when it's economically advantageous to charge or discharge
  - Detecting anomalies and preventing potential faults

Control methods

- PID control – Proportional Integral Derivative
- Particle Swarm Optimization and Sliding Mode Control
- Model Predictive Control & Fuzzy Logic Control
- Deep Reinforcement Learning Control

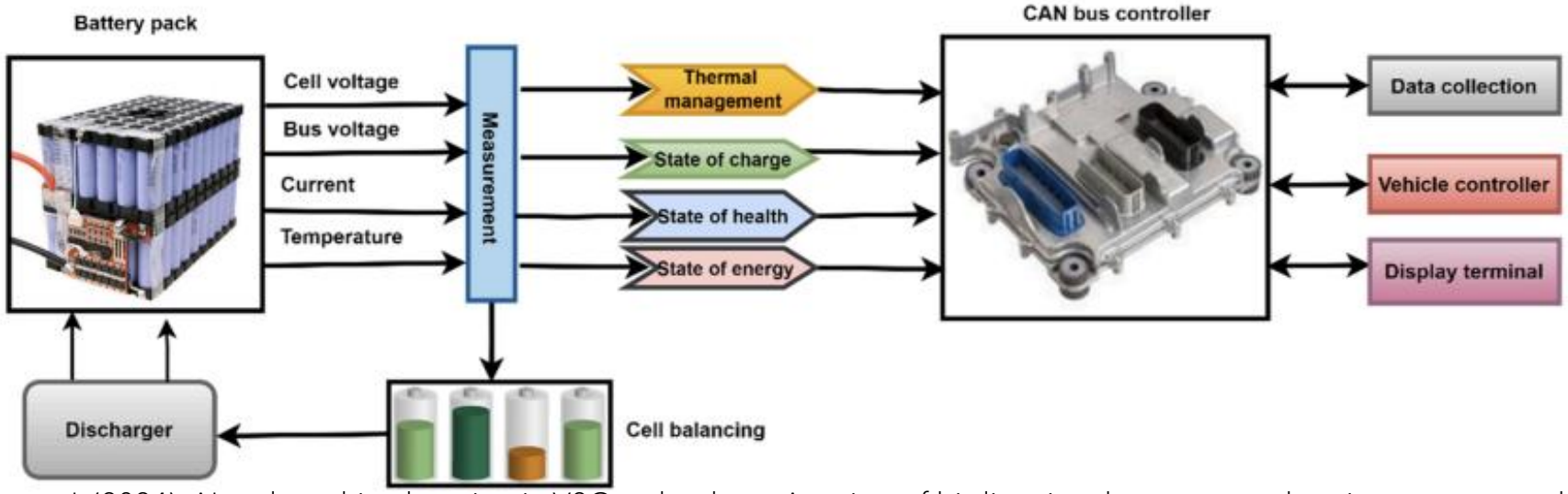

Munusamy, N., & Vairavasundaram, I. (2024). AI and machine learning in V2G technology: A review of bi-directional converters, charging systems, and control strategies for

Artificial Neural Network Control

Opportunities

- Can manage complex systems with many degrees of freedom and changing variables.

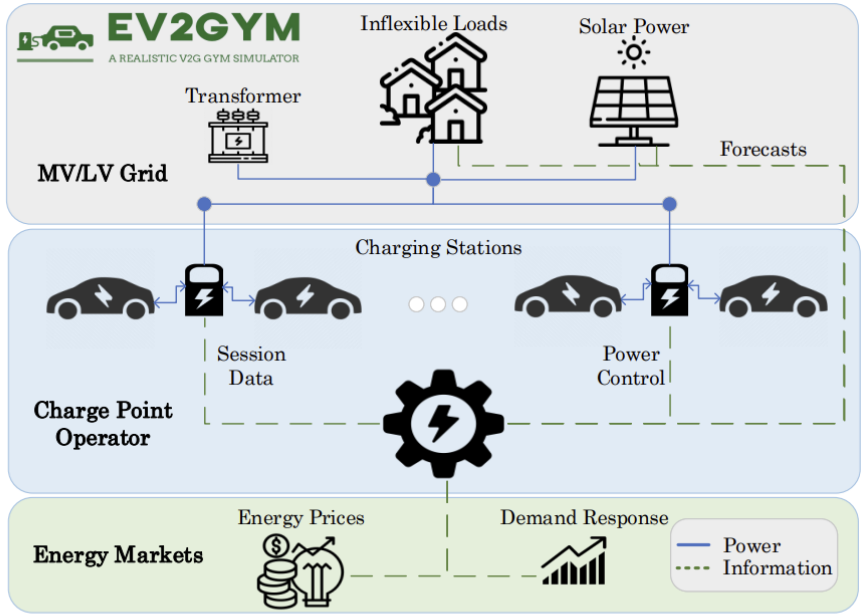

Fig. 1. Overview of EV2Gym's modules power and information flow.

Challenges

- Requires compute
  - Which in turn requires energy and space
- Requires accurate training data
  - Historical data may not represent the changing future of grid technology
  - Instead, train on data from simulators like EV2Gym
- Requires model updates

Diaz-Londono, C., Orfanoudakis, S., Vergara, P. P., Palensky, P., Ruiz, F., & Gruosso, G. (2024). *A simulation tool for V2G enabled demand response based on model predictive control*. arXiv. https://arxiv.org/abs/2405.11963

Grid Communication Technology

Communication regulates power flow between EVs, charging terminals, grid operators, and aggregators

- Communication of information related to power-quality (grid maintenance), current state of charge, and electricity pricing

Standardized protocols like ISO 15118 and IEC61850 direct communication between EVs and charging terminals and between multiple charging terminals

- Existing protocols like OCPP (Open Charge Point Protocol) don't currently support advanced bidirectional energy flows

V2G systems require robust communication networks with minimal delays

Communication security is essential to prevent cyber attack and protect data privacy

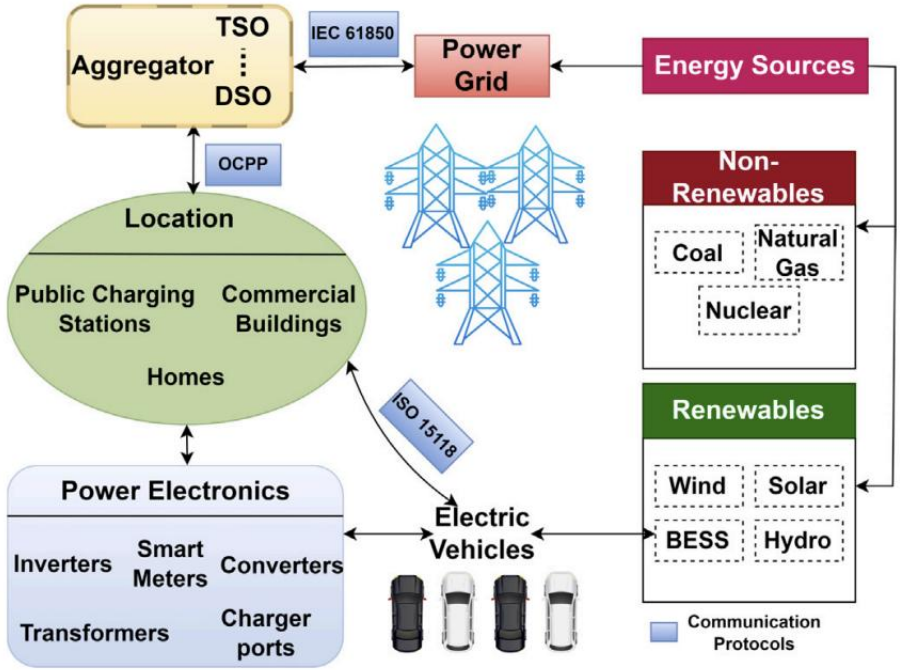

Fig. 1. Components and power management in Vehicle-to-Grid (V2G) Systems [51].

Rao, S. P., Olusegun, T. S., Ranganathan, P., Kose, U., & Goveas, N. (2025). Vehicle-to-grid technology: Opportunities, challenges, and future prospects for sustainable transportation. *Journal of Energy Storage, 110,* 114927. https://doi.org/10.1016/j.est.2024.114927

Emerging Communication Solutions

- Standardize global communication protocols
- Improved middleware for interoperability
- AI and Machine Learning systems
  - Respond to changes in grid conditions
  - Communicate among assets
  - Orchestrate distributed fleet charging schedules
- Cybersecurity & Blockchain Technologies
  - Blockchain presents a decentralized architecture for tamper-proof energy transactions and owner privacy

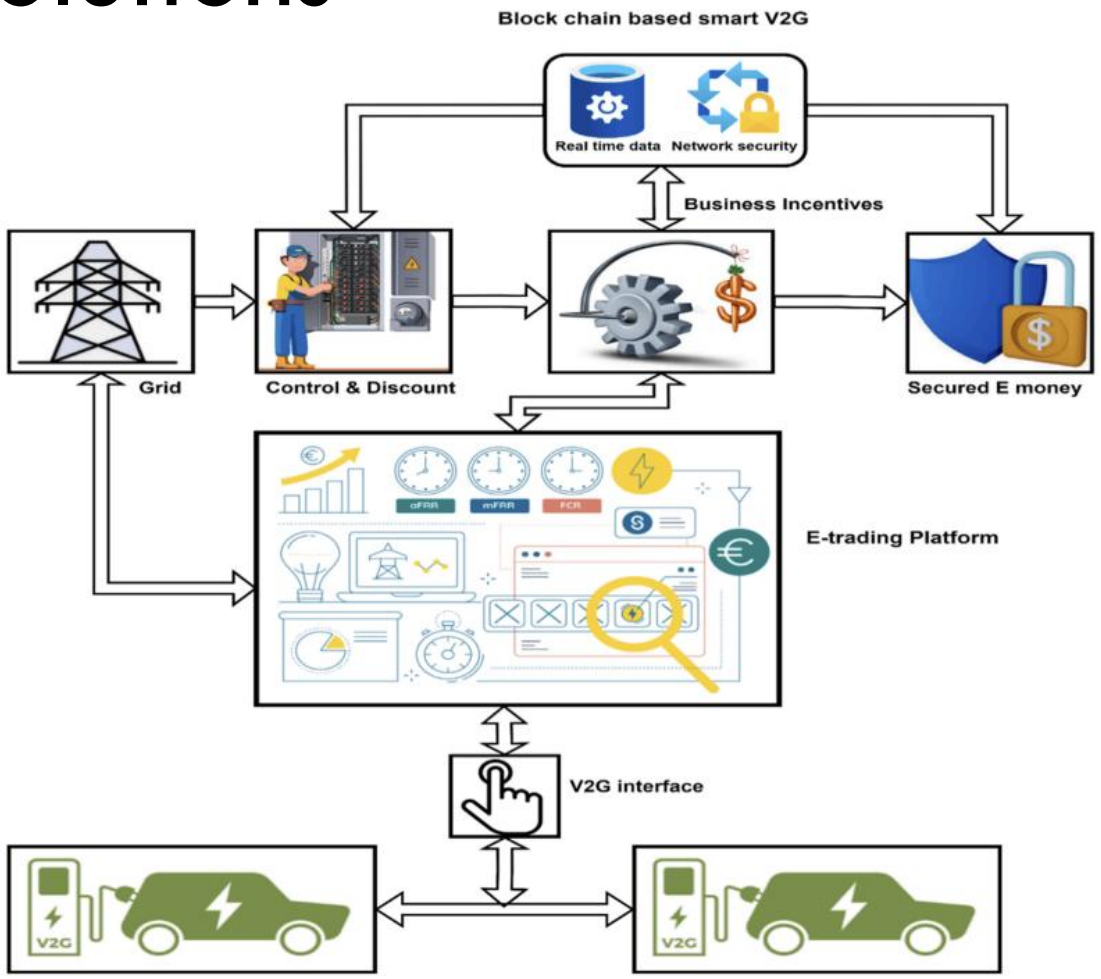

Fig. 18. Vehicle-to-Grid blockchain-based smart infrastructure.

Munusamy, N., & Vairavasundaram, I. (2024). AI and machine learning in V2G technology: A review of bi-directional converters, charging systems, and control strategies for smart grid integration. *e-Prime – Advances in Electrical Engineering, Electronics and Energy, 10,* 100856. https://doi.org/10.1016/j.prime.2024.100856

Existing Models Today

Some EVs come equipped with bidirectional charging capabilities today

Japan has deployed a Leaf to Home initiative which has over 4K V2G charging points

EV	Features
Nissan Leaf ZE1	V2G & V2H + CHAdeMO connector
Outlander PHEV	V2G & V2H + CHAdeMO connector
Ford F-150 Lightning	V2G & V2H + CCS1 connector
Hyundai Ioniq 5	V2L with CCS2 connector
KIA EV6	V2L with CCS2 connector
Genesis GV60	V2L with CCS2 connector
Volkswagen ID Buzz	V2G with CCS2 connector + fast charging port

Bidirectional Chargers	Features
Wallbox Quasar	7.4 kW for V2G and V2H via CHAdeMO
Halo by StarCharge	7.4kW and 11 kW for V2G
SigenEnergy	12.5 kW/25kW for V2H via CCS connector
GM Energy V2H	11.5 kW for V2H

Future Prospects

- Start small with vehicle to home and vehicle to load technologies
- Improve local battery management
- Improve battery life and range
  - Combat range anxiety and warranty concerns
- Test and improve technology with commercial fleets/contracts
- Expand V2G options at communal charging locations
- Expand to large-scale V2G orchestration

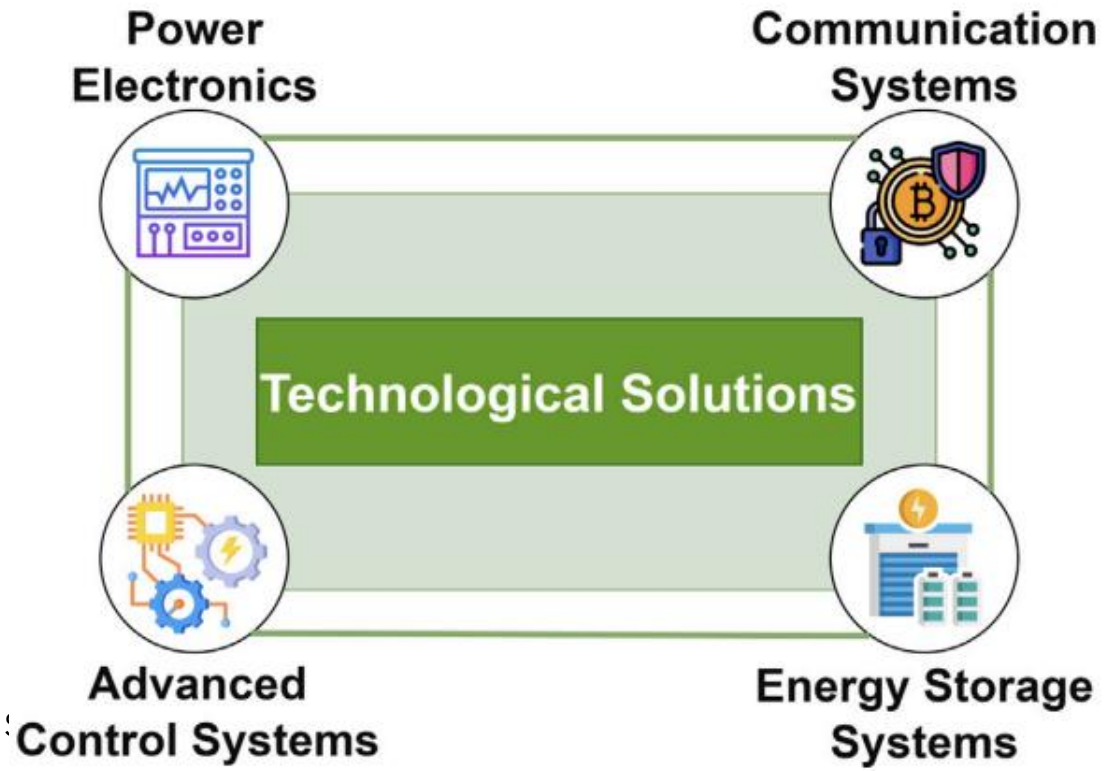

Fig. 5. Emerging and future technologies to offer V2G services.

Rao, S. P., Olusegun, T. S., Ranganathan, P., Kose, U., & Goveas, N. (2025). Vehicle-to-grid technology: Opportunities, challenges, and future prospects for sustainable transportation. *Journal of Energy Storage, 110,* 114927. https://doi.org/10.1016/j.est.2024.114927

Thank you