COSC349
Chapter 4-1: Network Layer: Data Plane

All material copyright 1996-2020
J.F Kurose and K.W. Ross, All Rights Reserved

Network layer: our goals

- understand principles behind network layer services, focusing on data plane:
  - network layer service models
  - forwarding versus routing
  - how a router works
  - addressing
  - generalized forwarding
  - Internet architecture
- instantiation, implementation in the Internet
  - IP protocol
  - NAT, middleboxes

Network-layer services and protocols

- transport segment from sending to receiving host
  - sender: encapsulates segments into datagrams, passes to link layer
  - receiver: delivers segments to transport layer protocol
- network layer protocols in *every Internet device*: hosts, routers
- routers:
  - examines header fields in all IP datagrams passing through it
  - moves datagrams from input ports to output ports to transfer datagrams along end-end path

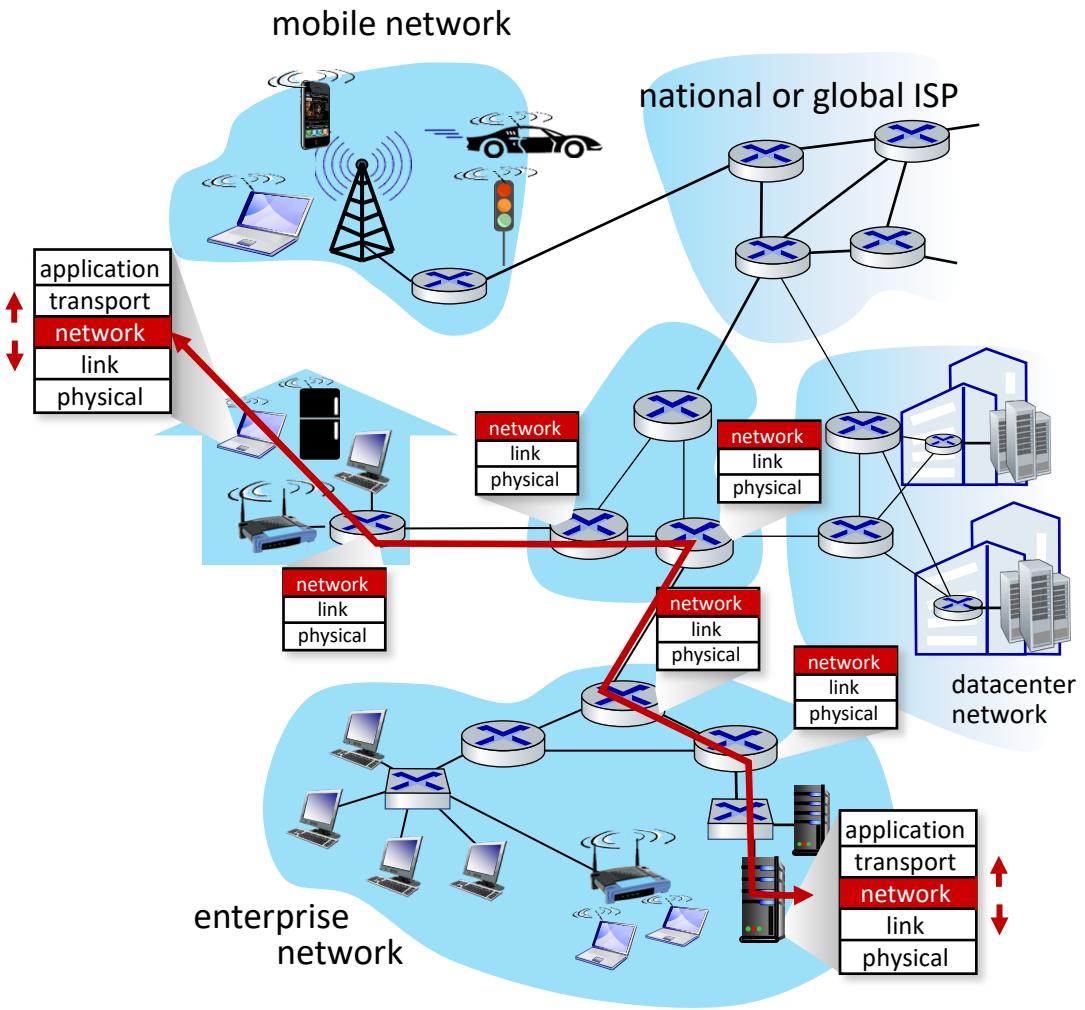

Two key network-layer functions

network-layer functions:

- *forwarding:* move packets from a router's input link to appropriate router output link
- *routing:* determine route taken by packets from source to destination
  - *routing algorithms*

analogy: taking a trip

- *forwarding:* process of getting through single interchange
- *routing:* process of planning trip from source to destination

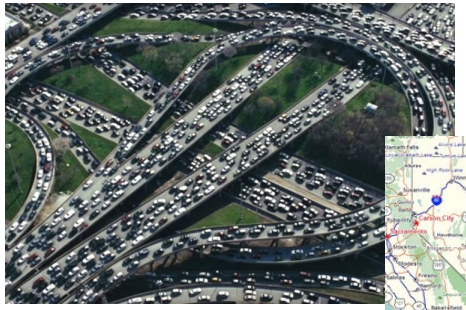

forwarding

routing

Network layer: data plane, control plane

Data plane:

- *local*, per-router function
- determines how datagram arriving on router input port is forwarded to router output port

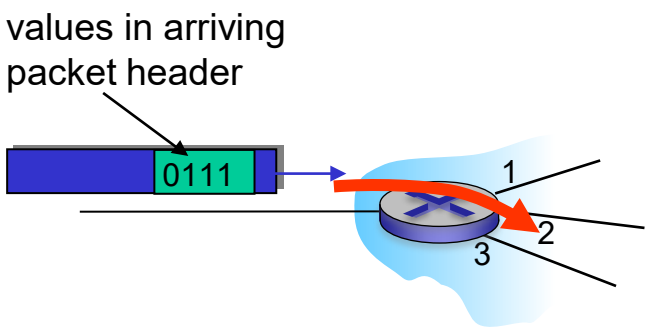

Control plane

- *network-wide* logic
- determines how datagram is routed among routers along end-end path from source host to destination host
- two control-plane approaches:
  - *traditional routing algorithms:* implemented in routers
  - *software-defined networking (SDN)*: implemented in (remote) servers

Per-router control plane

Individual routing algorithm components *in each and every router* interact in the control plane

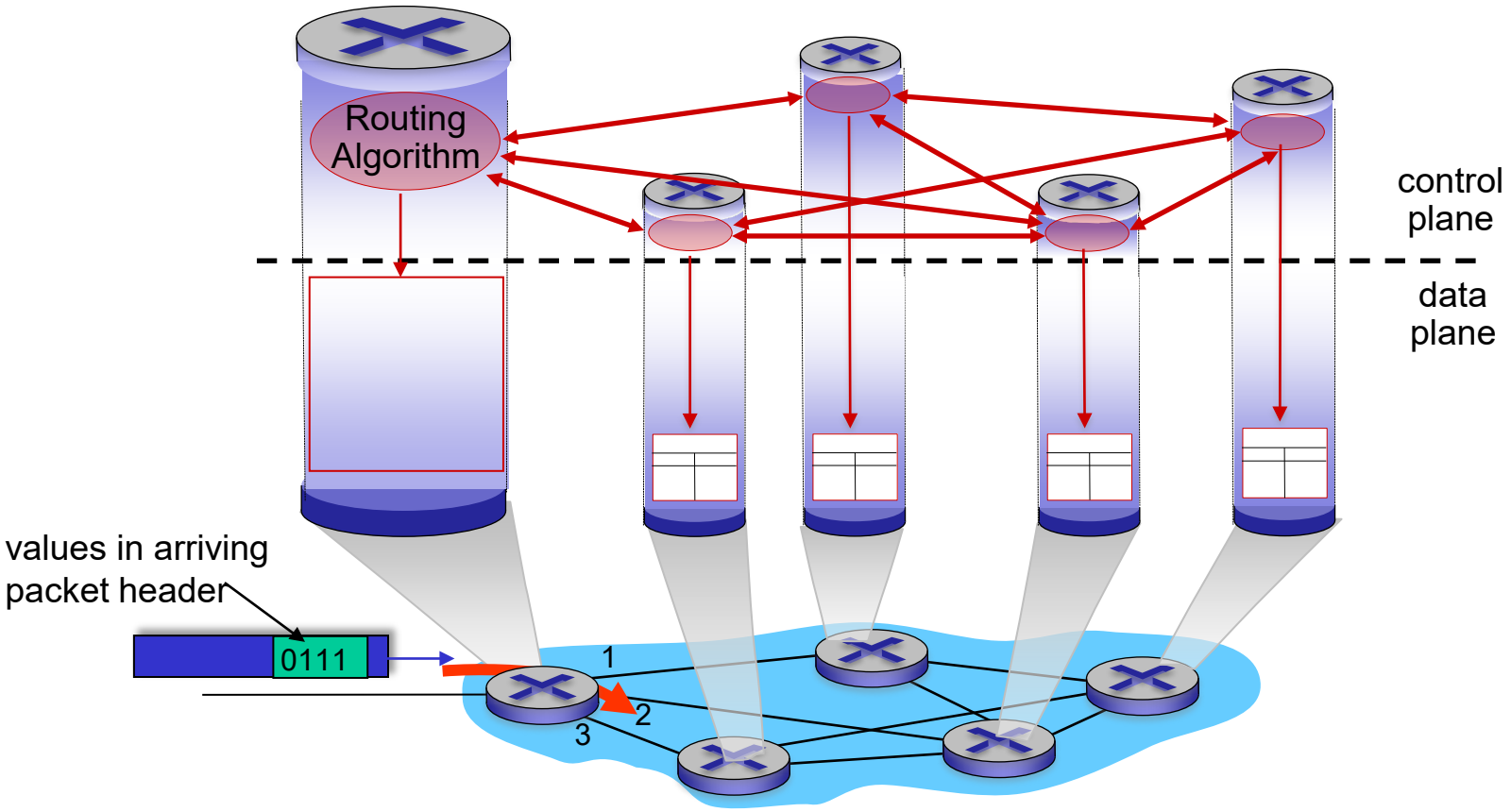

Software-Defined Networking (SDN) control plane

Remote controller computes, installs forwarding tables in routers

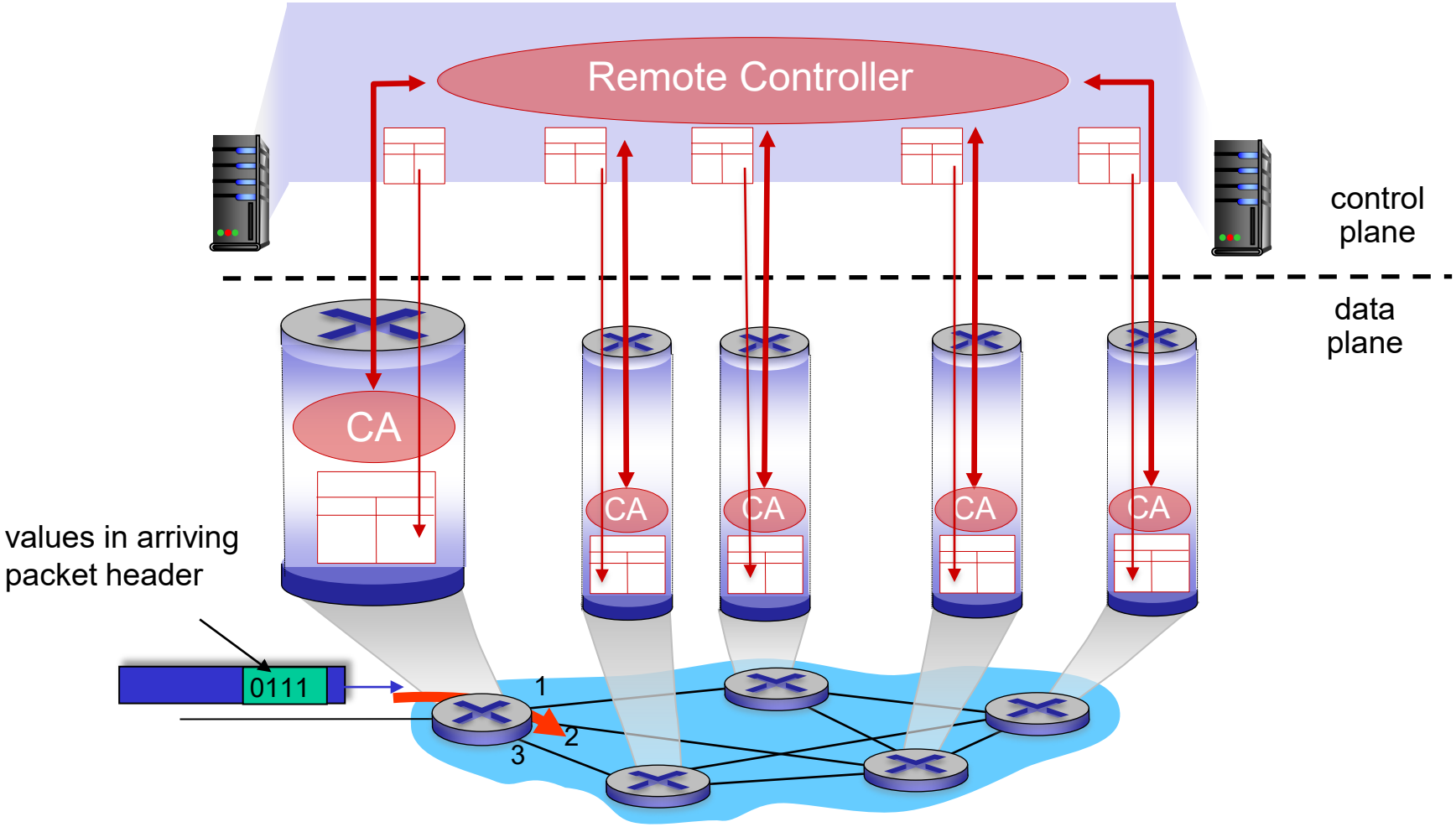

Router architecture overview

high-level view of generic router architecture:

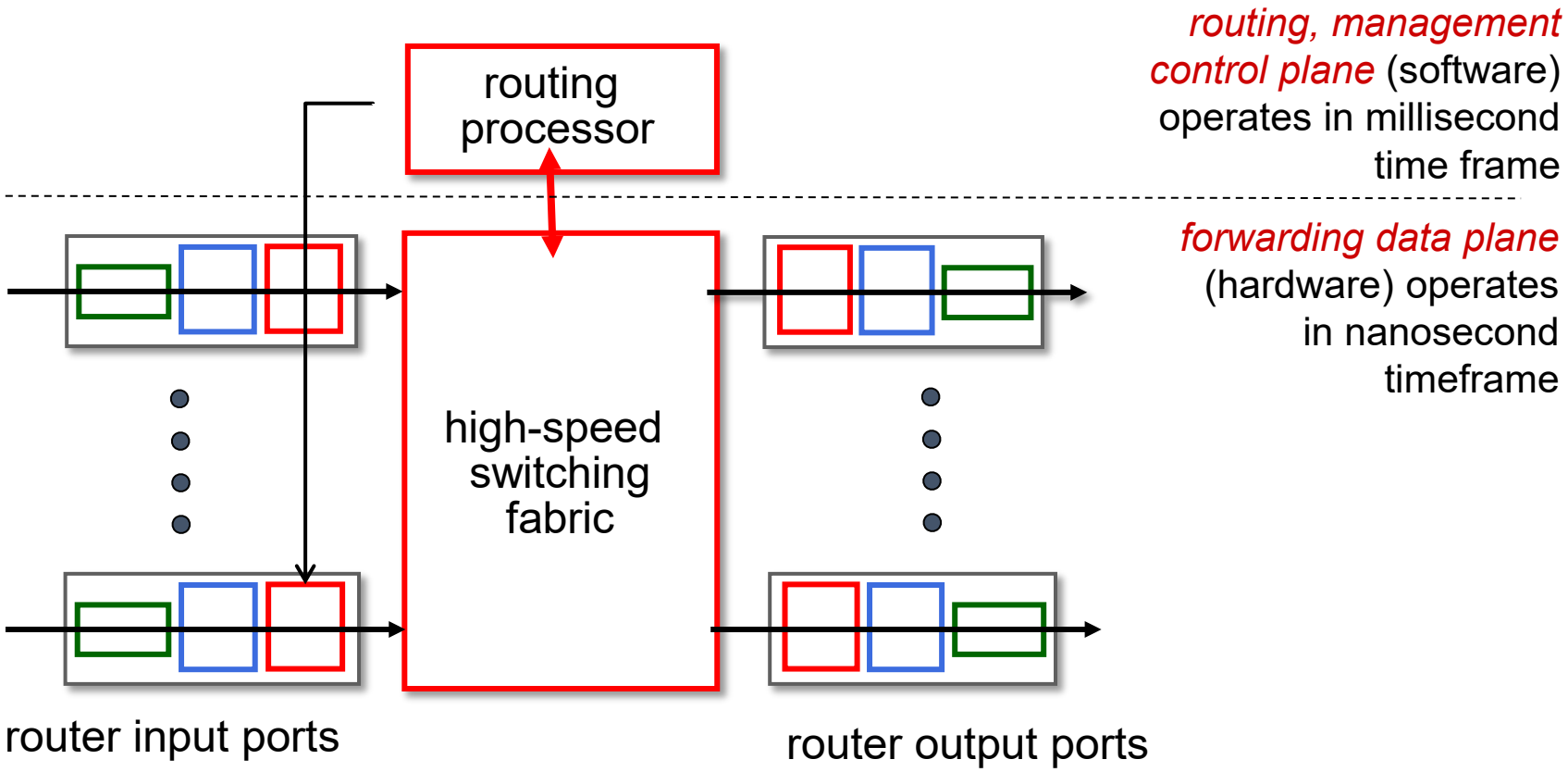

Input port functions

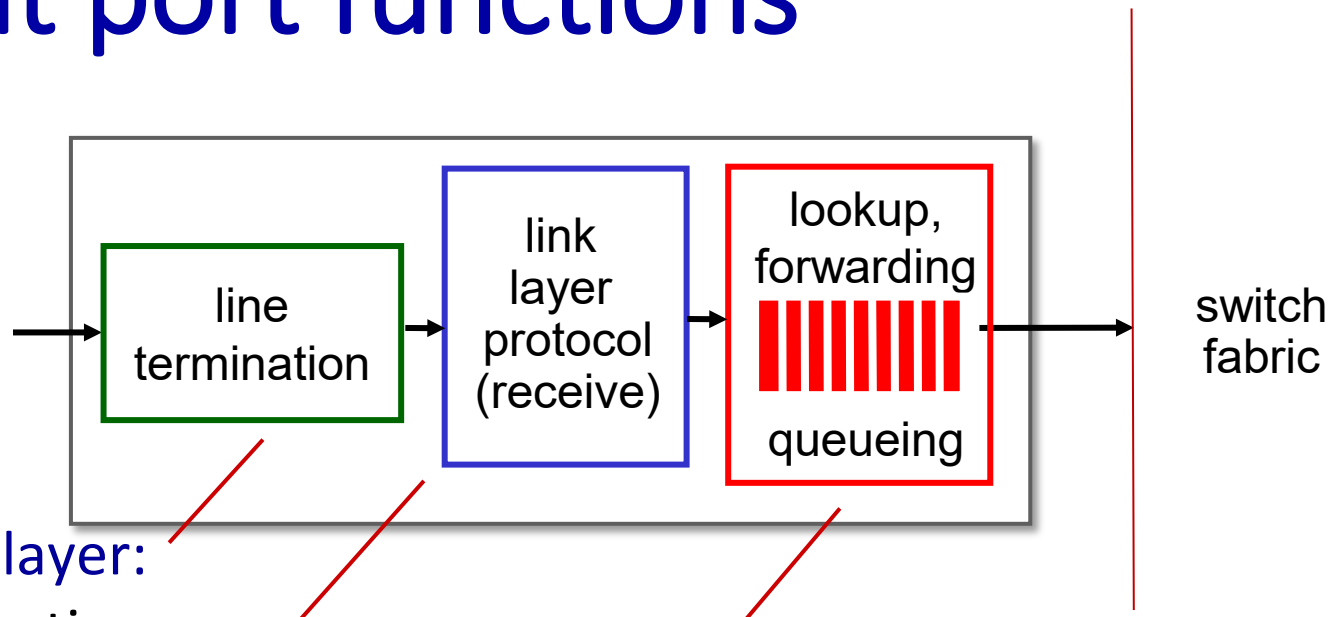

physical layer:
bit-level reception

link layer:
e.g., Ethernet
(chapter 6)

decentralized switching:

- using header field values, lookup output port using forwarding table in input port memory *("match plus action")*
- goal: complete input port processing at 'line speed'
- input port queuing: if datagrams arrive faster than forwarding rate into switch fabric

Input port functions

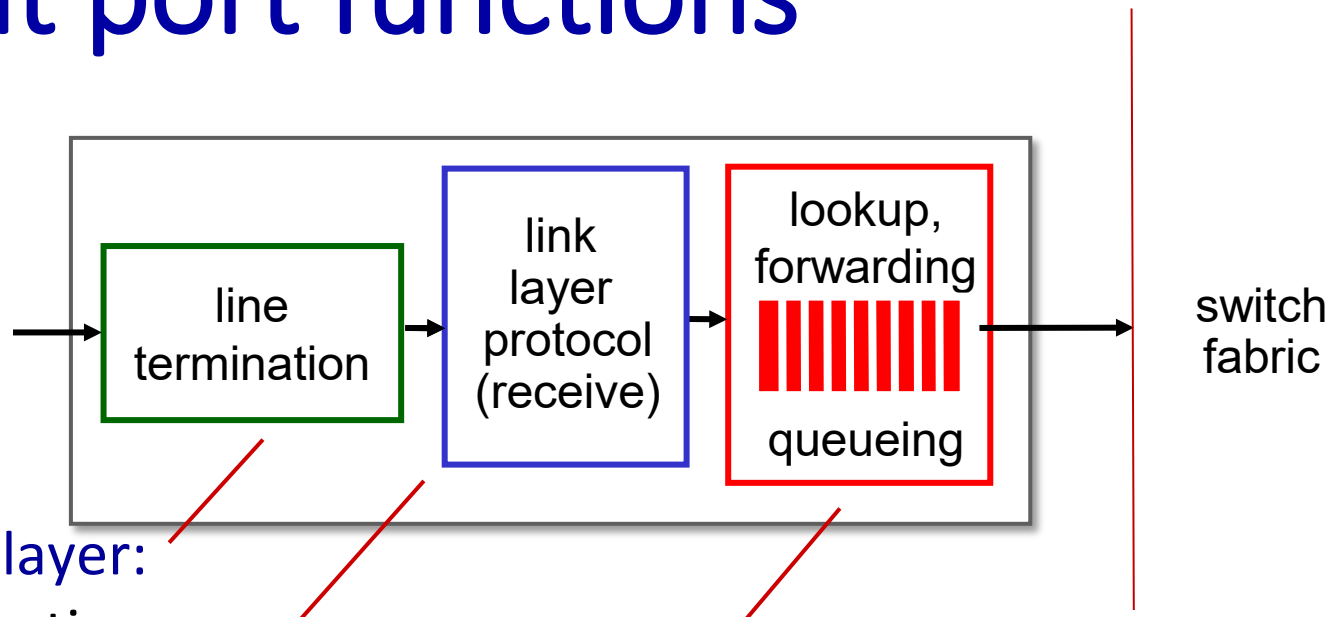

physical layer:
bit-level reception

link layer:
e.g., Ethernet
(chapter 6)

decentralized switching:

- using header field values, lookup output port using forwarding table in input port memory *("match plus action")*
- destination-based forwarding: forward based only on destination IP address (traditional)
- generalized forwarding: forward based on any set of header field values

Destination-based forwarding

forwarding table

Destination Address Range	Link Interface
11001000 00010111 00010000 00000000 through 11001000 00010111 00010111 11111111	0
11001000 00010111 00011000 00000000 through 11001000 00010111 00011000 11111111	1
11001000 00010111 00011001 00000000 through 11001000 00010111 00011111 11111111	2
otherwise	3

Longest prefix matching

longest prefix match

when looking for forwarding table entry for given destination address, use *longest* address prefix that matches destination address.

Destination Address Range	Link interface
11001000 00010111 00010*** ********	0
11001000 00010111 00011000 ********	1
11001000 00010111 00011*** ********	2
otherwise	3

examples:

11001000 00010111 00010110 10100001 which interface?

11001000 00010111 00011000 10101010 which interface?

Longest prefix matching

longest prefix match

when looking for forwarding table entry for given destination address, use *longest* address prefix that matches destination address.

Destination Address Range				Link interface
11001000	00010111	00010***	********	0
11001000	00010111	00011000	********	1
11001000	match!	00011***	********	2
otherwise				3

examples:

11001000	00010111	00010110	10100001	which interface?
11001000	00010111	00011000	10101010	which interface?

Longest prefix matching

longest prefix match

when looking for forwarding table entry for given destination address, use *longest* address prefix that matches destination address.

Destination Address Range	Link interface
11001000 00010111 00010*** ********	0
11001000 00010111 00011000 ********	1
11001000 00010111 00011*** ********	2
otherwise	3

match!

examples:

11001000 00010111 00010110 10100001	which interface?
11001000 00010111 00011000 10101010	which interface?

Longest prefix matching

longest prefix match

when looking for forwarding table entry for given destination address, use *longest* address prefix that matches destination address.

Destination Address Range	Link interface
11001000 00010111 00010*** ********	0
11001000 00010111 00011000 ********	1
11001000 00010111 00011*** ********	2
otherwise	3

match!

examples:

11001000 00010111 00010110 10100001	which interface?
11001000 00010111 00011000 10101010	which interface?

Switching fabrics

- transfer packet from input link to appropriate output link
- switching rate: rate at which packets can be transfer from inputs to outputs
  - often measured as multiple of input/output line rate
  - N inputs: switching rate N times line rate desirable

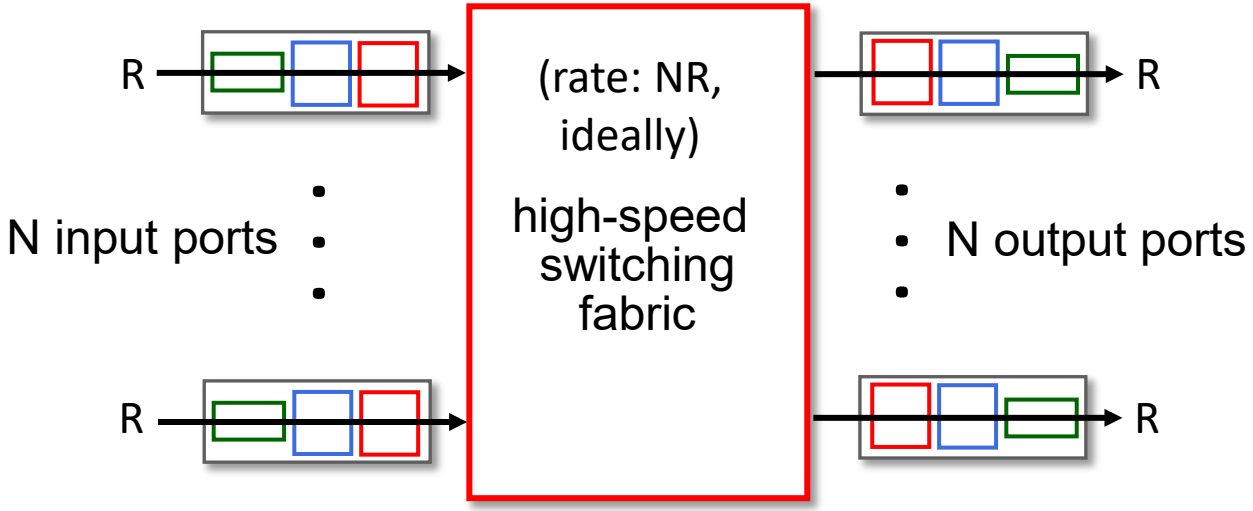

Switching fabrics

- transfer packet from input link to appropriate output link
- switching rate: rate at which packets can be transfer from inputs to outputs
  - often measured as multiple of input/output line rate
  - N inputs: switching rate N times line rate desirable
- three major types of switching fabrics:

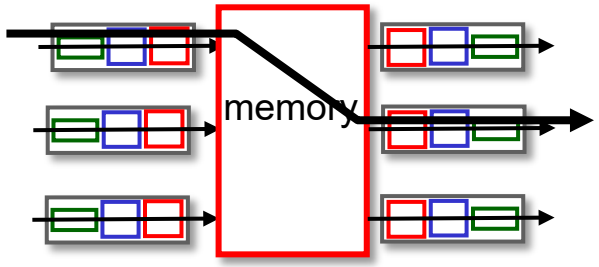

memory

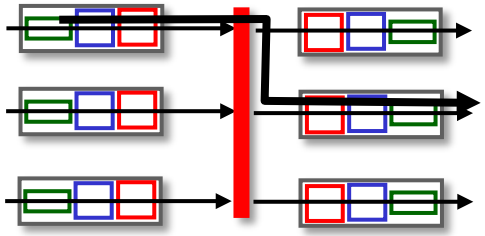

bus

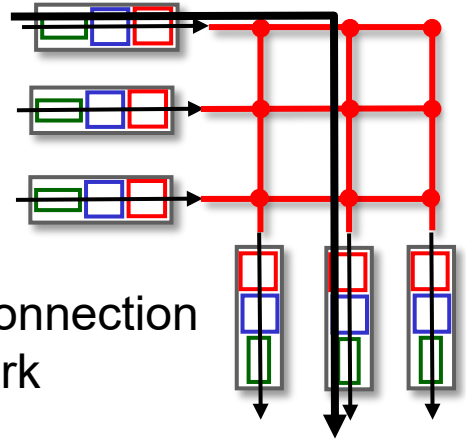

interconnection network

Switching via memory

first generation routers:

- traditional computers with switching under direct control of CPU
- packet copied to system's memory
- speed limited by memory bandwidth (2 bus crossings per datagram)

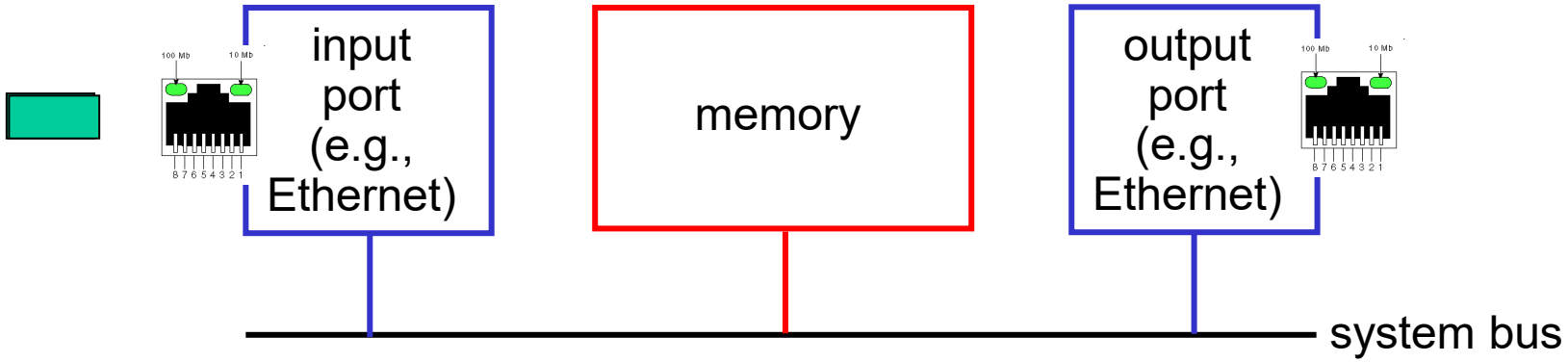

Switching via a bus

- datagram from input port memory to output port memory via a shared bus
- *bus contention:* switching speed limited by bus bandwidth
- 32 Gbps bus, Cisco 5600: sufficient speed for access routers

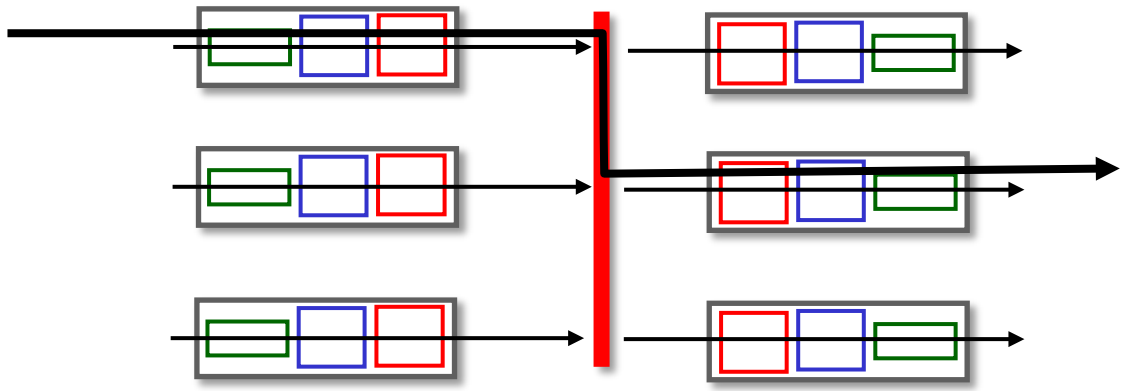

Switching via interconnection network

- Crossbar, Clos networks, other interconnection nets initially developed to connect processors in multiprocessor
- multistage switch: *nxn* switch from multiple stages of smaller switches
- exploiting parallelism:
  - fragment datagram into fixed length cells on entry
  - switch cells through the fabric, reassemble datagram at exit

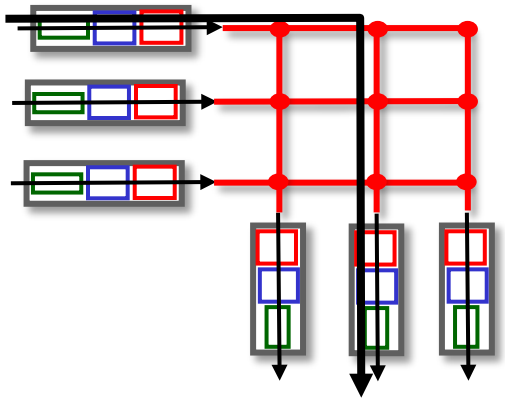

3x3 crossbar

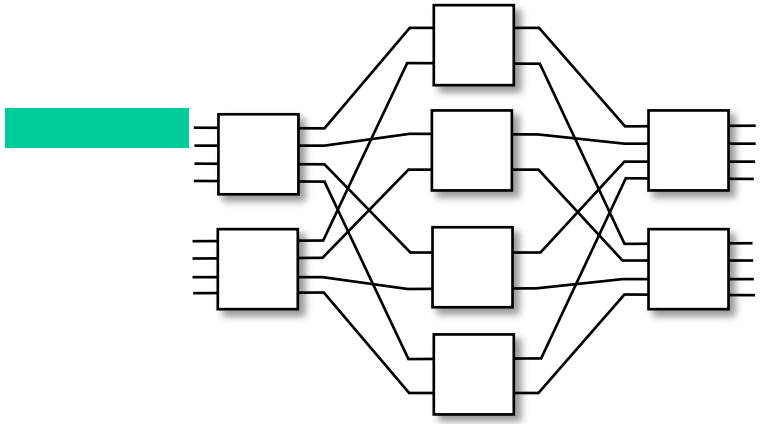

8x8 multistage switch
built from smaller-sized switches

Input port queuing

- If switch fabric slower than input ports combined -> queueing may occur at input queues
  - queueing delay and loss due to input buffer overflow!
- Head-of-the-Line (HOL) blocking: queued datagram at front of queue prevents others in queue from moving forward

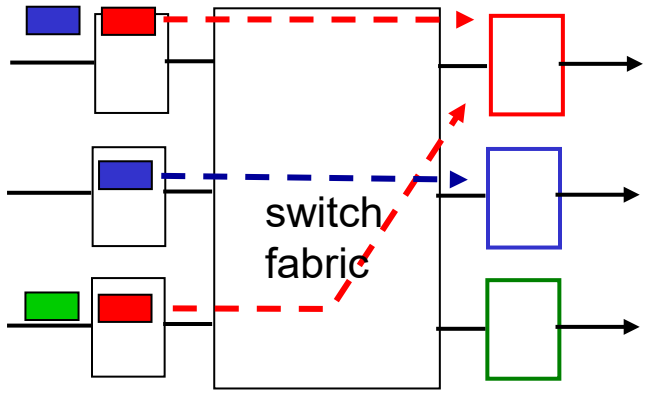

output port contention: only one red datagram can be transferred. lower red packet is *blocked*

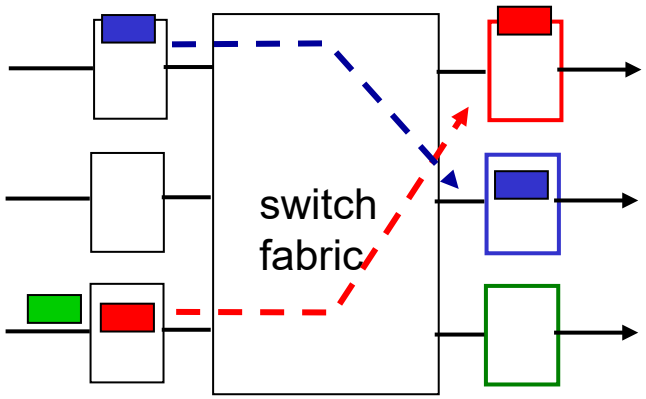

one packet time later: green packet experiences HOL blocking

Output port queuing

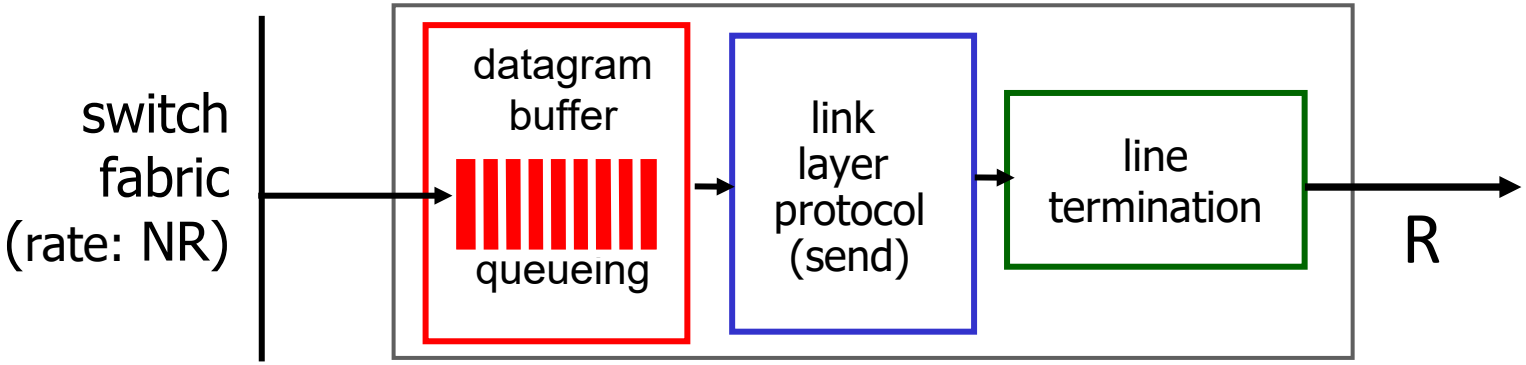

This is a really important slide

- *Buffering* required when datagrams arrive from fabric faster than link transmission rate. *Drop policy:* which datagrams to drop if no free buffers?

→ Datagrams can be lost due to congestion, lack of buffers

- *Scheduling discipline* chooses among queued datagrams for transmission

→ Priority scheduling – who gets best performance, network neutrality

Output port queuing

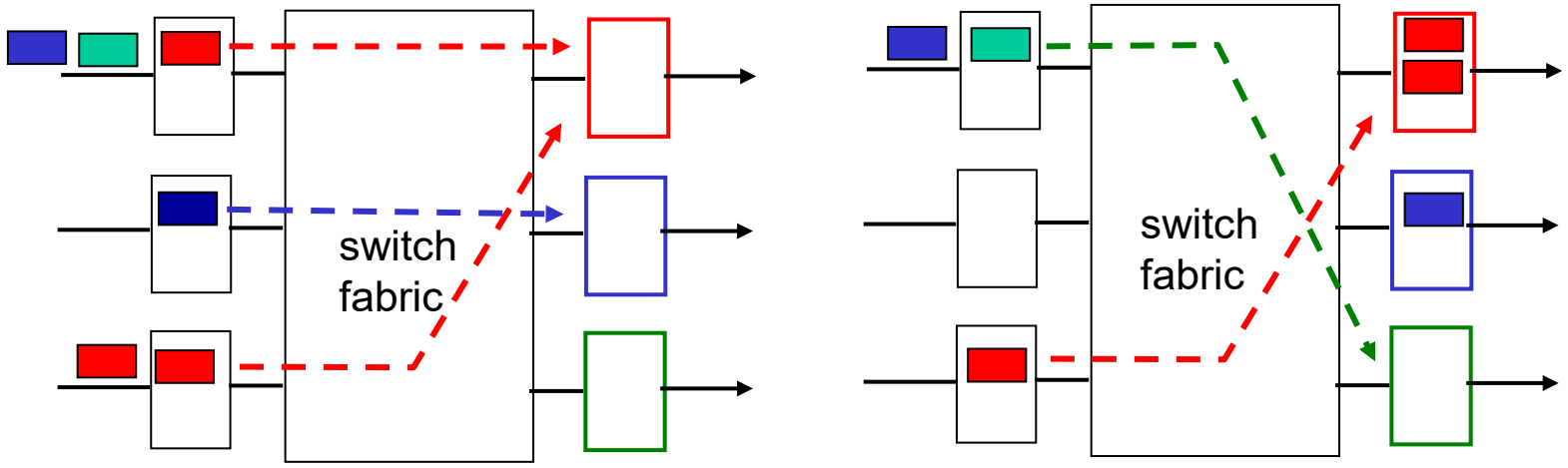

at *t*, packets more from input to output

one packet time later

- buffering when arrival rate via switch exceeds output line speed
- *queueing (delay) and loss due to output port buffer overflow!*

How much buffering?

- RFC 3439 rule of thumb: average buffering equal to "typical" RTT (say 250 msec) times link capacity C
  - e.g., C = 10 Gbps link: 2.5 Gbit buffer
- more recent recommendation: with *N* flows, buffering equal to

$$\frac{RTT \cdot C}{\sqrt{N}}$$

- but *too* much buffering can increase delays (particularly in home routers)
  - long RTTs: poor performance for realtime apps, sluggish TCP response
  - recall delay-based congestion control: "keep bottleneck link just full enough (busy) but no fuller"

Buffer Management

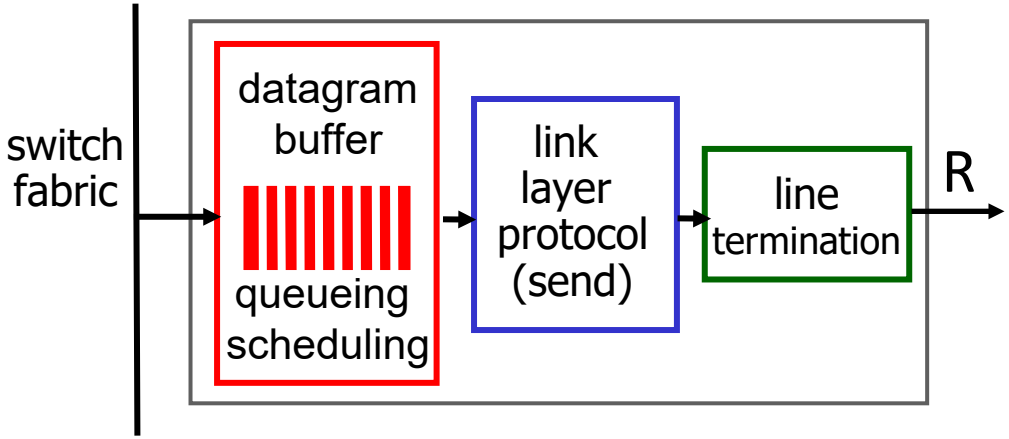

Abstraction: queue

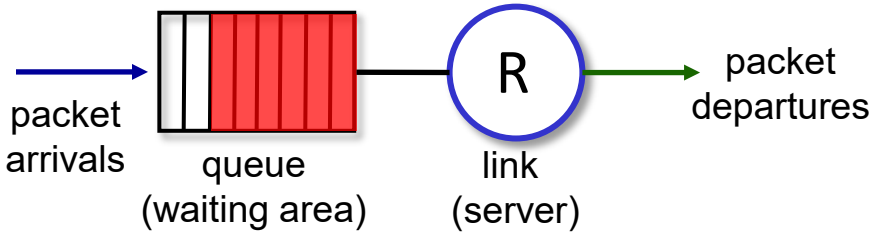

buffer management:

- drop: which packet to add, drop when buffers are full
  - tail drop: drop arriving packet
  - priority: drop/remove on priority basis
- marking: which packets to mark to signal congestion (ECN, RED)

Packet Scheduling: FCFS

packet scheduling: deciding which packet to send next on link

- first come, first served
- priority
- round robin
- weighted fair queueing

Abstraction: queue

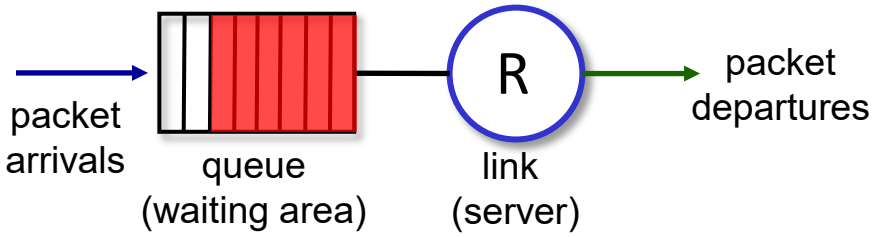

FCFS: packets transmitted in order of arrival to output port

- also known as: First-in-first-out (FIFO)
- real world examples?

Scheduling policies: priority

Priority scheduling:

- arriving traffic classified, queued by class
  - any header fields can be used for classification
- send packet from highest priority queue that has buffered packets
  - FCFS within priority class

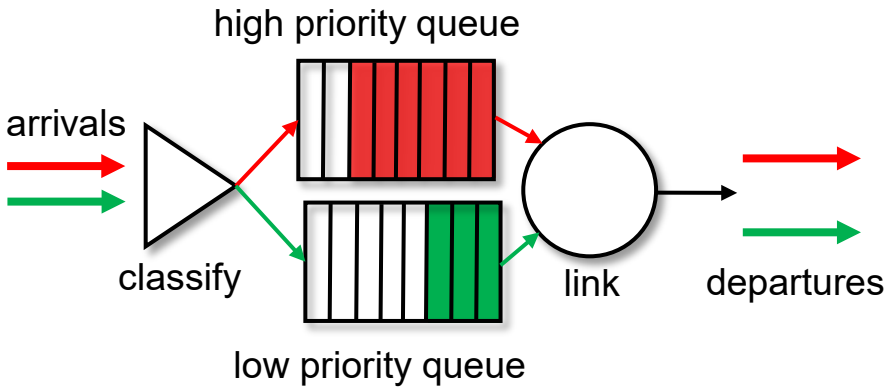

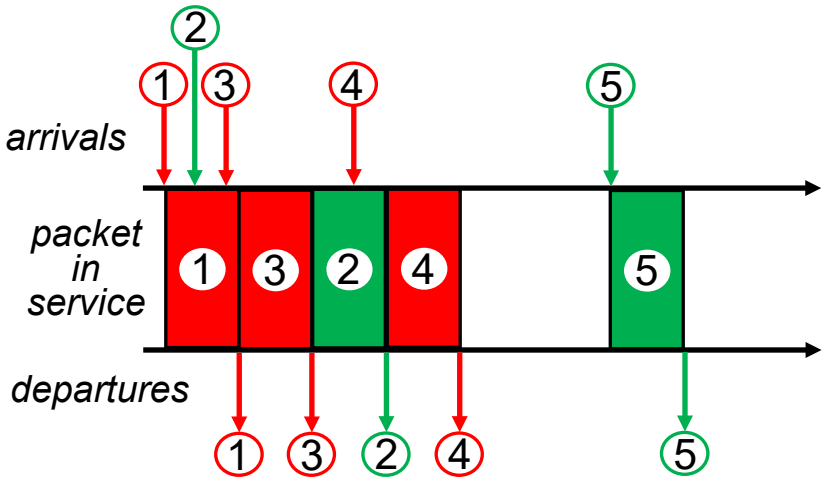

Scheduling policies: round robin

Round Robin (RR) scheduling:

- arriving traffic classified, queued by class
  - any header fields can be used for classification
- server cyclically, repeatedly scans class queues, sending one complete packet from each class (if available) in turn

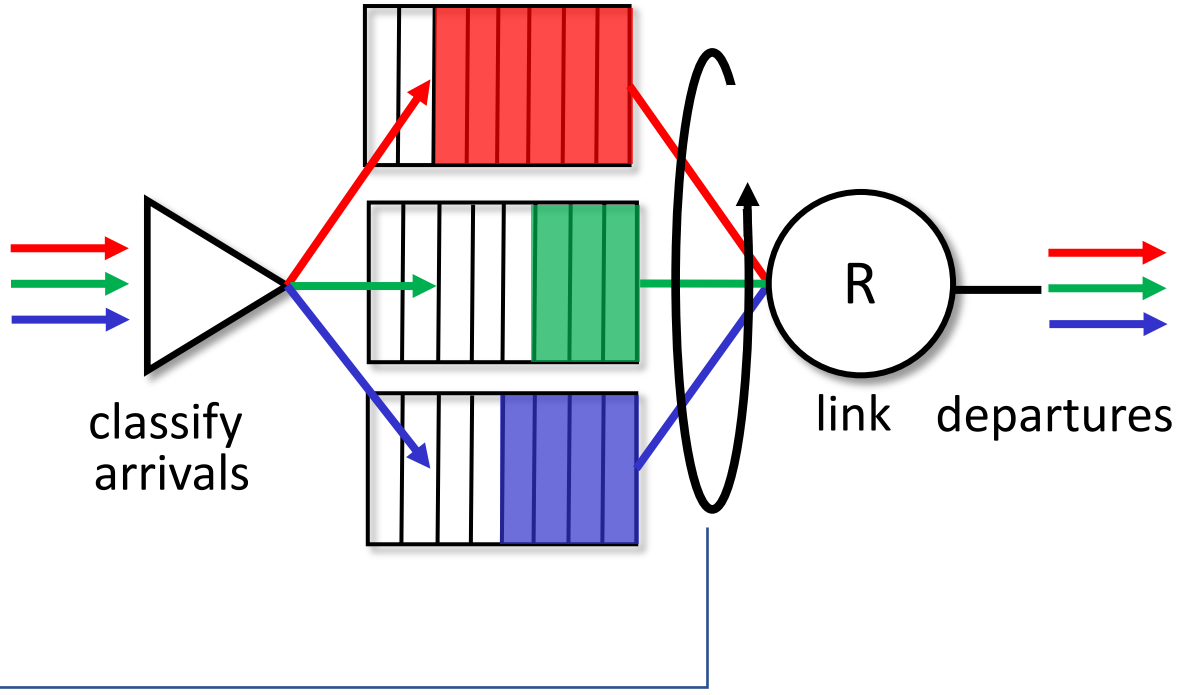

Scheduling policies: weighted fair queueing

Weighted Fair Queuing (WFQ):

- generalized Round Robin
- each class, *i*, has weight, w_i, and gets weighted amount of service in each cycle:

$$\frac{w_i}{\sum_j w_j}$$
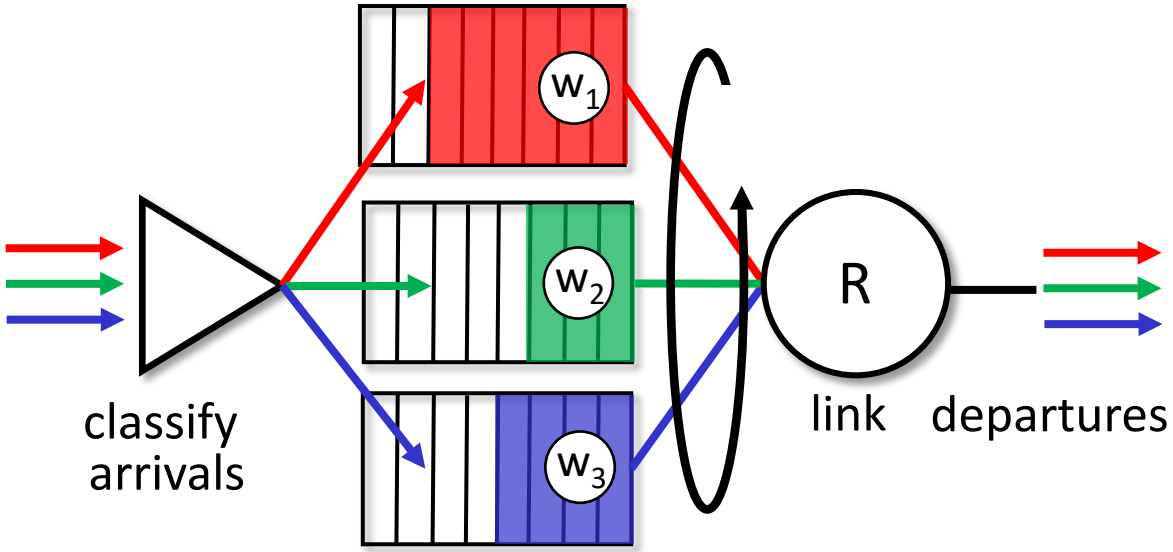
- minimum bandwidth guarantee (per-traffic-class)