ANSWERS

EXERCISE 1.1

1. (i), (iv), (v), (vi), (vii) and (viii) are sets.

2. (i) $\in$ (ii) $\notin$ (iii) $\notin$ (vi) $\in$ (v) $\in$ (vi) $\notin$

3. (i) A = {–3, –2, –1, 0, 1, 2, 3, 4, 5, 6 } (ii) B = {1, 2, 3, 4, 5}
(iii) C = {17, 26, 35, 44, 53, 62, 71, 80} (iv) D = {2, 3, 5}
(v) E = {T, R, I, G, O, N, M, E, Y} (vi) F = {B, E, T, R}

4. (i) $\{ x : x = 3n, n \in \mathrm{N} \text{ and } 1 \le n \le 4 \}$ (ii) $\{ x : x = 2^n, n \in \mathrm{N} \text{ and } 1 \le n \le 5 \}$
(iii) $\{ x : x = 5^n, n \in \mathrm{N} \text{ and } 1 \le n \le 4 \}$ (iv) $\{ x : x$ is an even natural number$\}$
(v) $\{ x : x = n^2, n \in \mathrm{N} \text{ and } 1 \le n \le 10 \}$

5. (i) A = {1, 3, 5, . . . } (ii) B = {0, 1, 2, 3, 4 }
(iii) C = { –2, –1, 0, 1, 2 } (iv) D = { L, O, Y, A }
(v) E = { February, April, June, September, November }
(vi) F = {*b*, *c*, *d*, *f*, *g*, *h*, *j* }

6. (i) $\leftrightarrow$ (c) (ii) $\leftrightarrow$ (a) (iii) $\leftrightarrow$ (d) (iv) $\leftrightarrow$ (b)

EXERCISE 1.2

1. (i), (iii), (iv)

2. (i) Finite (ii) Infinite (iii) Finite (iv) Infinite (v) Finite

3. (i) Infinite (ii) Finite (iii) Infinite (iv) Finite (v) Infinite

4. (i) Yes (ii) No (iii) Yes (iv) No

5. (i) No (ii) Yes **6.** B= D, E = G

EXERCISE 1.3

1. (i) $\subset$ (ii) $\not\subset$ (iii) $\subset$ (iv) $\not\subset$ (v) $\not\subset$ (vi) $\subset$
(vii) $\subset$

2. (i) False (ii) True (iii) False (iv) True (v) False (vi) True

3. (i), (v), (vii), (viii), (ix), (xi)

4. (i) ϕ, { *a* } (ii) ϕ, { *a* }, { *b* }, { *a*, *b* }
(iii) ϕ, { 1 }, { 2 }, { 3 }, { 1, 2 }, { 1, 3 }, { 2, 3 }, { 1, 2, 3 } (iv) ϕ

5. 1

6. (i) (– 4, 6] (ii) (– 12, –10) (iii) [0, 7)
(iv) [3, 4]

7. (i) $\{ x : x \in \mathrm{R}, -3 < x < 0 \}$ (ii) $\{ x : x \in \mathrm{R}, 6 \le x \le 12 \}$
(iii) $\{ x : x \in \mathrm{R}, 6 < x \le 12 \}$ (iv) $\{ x \ \mathrm{R} : -23 \le x < 5 \}$ **9.** (iii)

© NCERT not to be republished

EXERCISE 1.4

1. (i) $X \cup Y = \{1, 2, 3, 5\}$ (ii) $A \cup B = \{a, b, c, e, i, o, u\}$

(iii) $A \cup B = \{x : x = 1, 2, 4, 5$ or a multiple of $3\}$

(iv) $A \cup B = \{x : 1 < x < 10, x \in N\}$ (v) $A \cup B = \{1, 2, 3\}$

2. Yes, $A \cup B = \{a, b, c\}$ **3.** B

4. (i) $\{1, 2, 3, 4, 5, 6\}$ (ii) $\{1, 2, 3, 4, 5, 6, 7, 8\}$ (iii) $\{3, 4, 5, 6, 7, 8\}$

(iv) $\{3, 4, 5, 6, 7, 8, 9, 10\}$ (v) $\{1, 2, 3, 4, 5, 6, 7, 8\}$

(vi) $\{1, 2, 3, 4, 5, 6, 7, 8, 9, 10\}$ (vii) $\{3, 4, 5, 6, 7, 8, 9, 10\}$

5. (i) $X \cap Y = \{1, 3\}$ (ii) $A \cap B = \{a\}$ (iii) $\{3\}$ (iv) ϕ (v) ϕ

6. (i) $\{7, 9, 11\}$ (ii) $\{11, 13\}$ (iii) ϕ (iv) $\{11\}$

(v) ϕ (vi) $\{7, 9, 11\}$ (vii) ϕ

(viii) $\{7, 9, 11\}$ (ix) $\{7, 9, 11\}$ (x) $\{7, 9, 11, 15\}$

7. (i) B (ii) C (iii) D (iv) ϕ

(v) $\{2\}$ (vi) $\{x : x$ is an odd prime number $\}$ **8.** (iii)

9. (i) $\{3, 6, 9, 15, 18, 21\}$ (ii) $\{3, 9, 15, 18, 21\}$ (iii) $\{3, 6, 9, 12, 18, 21\}$

(iv) $\{4, 8, 16, 20)$ (v) $\{2, 4, 8, 10, 14, 16\}$ (vi) $\{5, 10, 20\}$

(vii) $\{20\}$ (viii) $\{4, 8, 12, 16\}$ (ix) $\{2, 6, 10, 14\}$

(x) $\{5, 10, 15\}$ (xi) $\{2, 4, 6, 8, 12, 14, 16\}$ (xii) $\{5, 15, 20\}$

10. (i) $\{a, c\}$ (ii) $\{f, g\}$ (iii) $\{b, d\}$

11. Set of irrational numbers **12.** (i) F (ii) F (iii) T (iv) T

EXERCISE 1.5

1. (i) $\{5, 6, 7, 8, 9\}$ (ii) $\{1, 3, 5, 7, 9\}$ (iii) $\{7, 8, 9\}$

(iv) $\{5, 7, 9\}$ (v) $\{1, 2, 3, 4\}$ (vi) $\{1, 3, 4, 5, 6, 7, 9\}$

2. (i) $\{d, e, f, g, h\}$ (ii) $\{a, b, c, h\}$ (iii) $\{b, d, f, h\}$

(iv) $\{b, c, d, e)$

3. (i) $\{x : x$ is an odd natural number $\}$

(ii) $\{x : x$ is an even natural number $\}$

(iii) $\{x : x \in \mathbf{N}$ and x is not a multiple of $3\}$

(iv) $\{x : x$ is a positive composite number and $x = 1]$

© NCERT not to be republished

(v) $\{ x : x$ is a positive integer which is not divisible by 3 or not divisible by 5$\}$
(vi) $\{ x : x \in \mathbf{N}$ and x is not a perfect square $\}$
(vii) $\{ x : x \in \mathbf{N}$ and x is not a perfect cube $\}$
(viii) $\{ x : x \in \mathbf{N}$ and $x \neq 3 \}$ (ix) $\{ x : x \in \mathbf{N}$ and $x \neq 2 \}$
(x) $\{ x : x \in \mathbf{N}$ and $x < 7 \}$ (xi) $\{ x : x \in \mathbf{N}$ and $x \leq \frac{9}{2} \}$

6. A' is the set of all equilateral triangles.

7. (i) U (ii) A (iii) ϕ (iv) ϕ

EXERCISE 1.6

1. 2 **2.** 5 **3.** 50 **4.** 42

5. 30 **6.** 19 **7.** 25, 35 **8.** 60

Miscellaneous Exercise on Chapter 1

1. $A \subset B$, $A \subset C$, $B \subset C$, $D \subset A$, $D \subset B$, $D \subset C$

2. (i) False (ii) False (iii) True (iv) False (v) False
(vi) True

7. False **12.** We may take $A = \{ 1, 2 \}$, $B = \{ 1, 3 \}$, $C = \{ 2 , 3 \}$

13. 325 **14.** 125 **15.** (i) 52, (ii) 30 **16.** 11

EXERCISE 2.1

1. $x = 2$ and $y = 1$ **2.** The number of elements in $A \times B$ is 9.

3. $G \times H = \{(7, 5), (7, 4), (7, 2), (8, 5), (8, 4), (8, 2)\}$
$H \times G = \{(5, 7), (5, 8), (4, 7), (4, 8), (2, 7), (2, 8)\}$

4. (i) False
$P \times Q = \{(m, n), (m, m), (n, n), (n, m)\}$
(ii) True
(iii) True

5. $A \times A = \{(-1, -1), (-1, 1), (1, -1), (1, 1)\}$
$A \times A \times A = \{(-1, -1, -1), (-1, -1, 1), (-1, 1, -1), (-1, 1, 1), (1, -1, -1), (1, -1, 1), (1, 1, -1), (1, 1, 1)\}$

6. $A = \{a, b\}$, $B = \{x, y\}$

8. $A \times B = \{(1, 3), (1, 4), (2, 3), (2, 4)\}$
$A \times B$ will have $2^4 = 16$ subsets.

9. $A = \{x, y, z\}$ and $B = \{1,2\}$

© NCERT not to be republished

10. A = {–1, 0, 1}, remaining elements of
A × A are (–1, –1), (–1, 1), (0, –1), (0, 0), (1, –1), (1, 0), (1, 1)

EXERCISE 2.2

1. R = {(1, 3), (2, 6), (3, 9), (4, 12)}
Domain of R = {1, 2, 3, 4}
Range of R = {3, 6, 9, 12}
Co domain of R = {1, 2, ..., 14}

2. R = {(1, 6), (2, 7), (3, 8)}
Domain of R = {1, 2, 3}
Range of R = {6, 7, 8}

3. R = {(1, 4), (1, 6), (2, 9), (3, 4), (3, 6), (5, 4), (5, 6)}

4. (i) R = {$(x, y) : y = x - 2$ for x = 5, 6, 7}
(ii) R = {(5,3), (6,4), (7,5)}. Domain of R = {5, 6, 7}, Range of R = {3, 4, 5}

5. (i) R = {(1, 1), (1,2), (1, 3), (1, 4), (1, 6), (2 4), (2, 6), (2, 2), (4, 4), (6, 6), (3, 3), (3, 6)}
(ii) Domain of R = {1, 2, 3, 4, 6}
(iii) Range of R = {1, 2, 3, 4, 6}

6. Domain of R = {0, 1, 2, 3, 4, 5,}
Range of R = {5, 6, 7, 8, 9, 10}

7. R = {(2, 8), (3, 27), (5, 125), (7, 343)}

8. No. of relations from A into B = 2^6

9. Domain of R = **Z**
Range of R = **Z**

EXERCISE 2.3

1. (i) yes, Domain = {2, 5, 8, 11, 14, 17}, Range = {1}
(ii) yes, Domain = (2, 4, 6, 8, 10, 12, 14}, Range = {1, 2, 3, 4, 5, 6, 7}
(iii) No.

2. (i) Domain = **R**, Range = $(-\infty, 0]$
(ii) Domain of function = $\{x : -3 \le x \le 3\}$
Range of function = $\{x : 0 \le x \le 3\}$

3. (i) $f(0) = -5$ (ii) $f(7) = 9$ (iii) $f(-3) = -11$

4. (i) $t(0) = 32$ (ii) $t(28) = \frac{412}{5}$ (iii) $t(-10) = 14$ (iv) 100

5. (i) Range = $(-\infty, 2)$ (ii) Range = $[2, \infty)$ (iii) Range = **R**

© NCERT not to be republished

Miscellaneous Exercise on Chapter 2

2. 2.1 **3.** Domain of function is set of real numbers except 6 and 2.

4. Domain = $[1, \infty)$, Range = $[0, \infty)$

5. Domain = **R**, Range = non-negative real numbers

6. Range = Any positive real number x such that $0 \le x < 1$

7. $(f + g)\, x = 3x - 2$ **8.** $a = 2, b = -1$ **9.** (i) No (ii) No (iii) No

$(f - g)\, x = -x + 4$

$$\left(\frac{f}{g}\right)x = \frac{x+1}{2x-3}, \quad x \neq \frac{3}{2}$$

10. (i) Yes, (ii) No **11.** No **12.** Range of $f = \{3, 5, 11, 13\}$

EXERCISE 3.1

1. (i) $\frac{5\pi}{36}$ (ii) $-\frac{19\pi}{72}$ (iii) $\frac{4\pi}{3}$ (iv) $\frac{26\pi}{9}$

2. (i) $39° \, 22' \, 30''$ (ii) $-229° \, 5' \, 29''$ (iii) $300°$ (iv) $210°$

3. 12π **4.** $12° \, 36'$ **5.** $\frac{20\pi}{3}$ **6.** 5 : 4

7. (i) $\frac{2}{15}$ (ii) $\frac{1}{5}$ (iii) $\frac{7}{25}$

EXERCISE 3.2

1. $\sin x = -\frac{\sqrt{3}}{2}, \operatorname{cosec} x = -\frac{2}{\sqrt{3}}, \sec x = -2, \tan x = \sqrt{3}, \cot x = \frac{1}{\sqrt{3}}$

2. $\operatorname{cosec} x = \frac{5}{3}, \cos x = -\frac{4}{5}, \sec x = -\frac{5}{4}, \tan x = -\frac{3}{4}, \cot x = -\frac{4}{3}$

3. $\sin x = -\frac{4}{5}, \operatorname{cosec} x = -\frac{5}{4}, \cos x = -\frac{3}{5}, \sec x = -\frac{5}{3}, \tan x = \frac{4}{3}$

4. $\sin x = -\frac{12}{13}, \operatorname{cosec} x = -\frac{13}{12}, \cos x = \frac{5}{13}, \tan x = -\frac{12}{5}, \cot x = -\frac{5}{12}$

© NCERT not to be republished

5. $\sin x = \frac{5}{13}, \operatorname{cosec} x = \frac{13}{5}, \cos x = -\frac{12}{13}, \sec x = -\frac{13}{12}, \cot x = -\frac{12}{5}$

6. $\frac{1}{\sqrt{2}}$ **7.** 2 **8.** $\sqrt{3}$ **9.** $\frac{\sqrt{3}}{2}$ **10.** 1

EXERCISE 3.3

5. (i) $\frac{\sqrt{3}+1}{2\sqrt{2}}$ (ii) $2 - \sqrt{3}$

EXERCISE 3.4

1. $\frac{\pi}{3}, \frac{4\pi}{3}, n\pi + \frac{\pi}{3}, n \in \mathbf{Z}$

2. $\frac{\pi}{3}, \frac{5\pi}{3}, 2n\pi \pm \frac{\pi}{3}, n \in \mathbf{Z}$

3. $\frac{5\pi}{6}, \frac{11\pi}{6}, n\pi + \frac{5\pi}{6}, n \in \mathbf{Z}$

4. $\frac{7\pi}{6}, \frac{11\pi}{6}, n\pi + (-1)^n \frac{7\pi}{6}, n \in \mathbf{Z}$

5. $x = \frac{n\pi}{3}$ or $x = n\pi, n \in \mathbf{Z}$

6. $x = (2n+1)\frac{\pi}{4}$, or $2n\pi \pm \frac{\pi}{3}, n \in \mathbf{Z}$

7. $x = n\pi + (-1)^n \frac{7\pi}{6}$ or $(2n+1)\frac{\pi}{2}, n \in \mathbf{Z}$

8. $x = \frac{n\pi}{2}$, or $\frac{n\pi}{2} + \frac{3\pi}{8}, n \in \mathbf{Z}$

9. $x = \frac{n\pi}{3}$, or $n\pi \pm \frac{\pi}{3}, n \in \mathbf{Z}$

Miscellaneous Exercise on Chapter 3

8. $\frac{\sqrt{5}}{5}, \frac{2\sqrt{5}}{5}, 2$

9. $\frac{\sqrt{6}}{3}, -\frac{\sqrt{3}}{3}, -\sqrt{2}$

10. $\frac{\sqrt{8+2\sqrt{15}}}{4}, \frac{\sqrt{8-2\sqrt{15}}}{4}, 4+\sqrt{15}$

© NCERT not to be republished

EXERCISE 5.1

1. 3
2. 0
3. i
4. $14 + 28\,i$
5. $2 - 7\,i$
6. $-\frac{19}{5} - \frac{21i}{10}$
7. $\frac{17}{3} + i\,\frac{5}{3}$
8. -4
9. $-\frac{242}{27} - 26i$
10. $\frac{-22}{3} - i\,\frac{107}{27}$
11. $\frac{4}{25} + i\,\frac{3}{25}$
12. $\frac{\sqrt{5}}{14} - i\,\frac{3}{14}$
13. i
14. $\frac{-7\sqrt{2}}{2}\,i$

EXERCISE 5.2

1. $2, \frac{-2\pi}{3}$
2. $2, \frac{5\pi}{6}$
3. $\sqrt{2}\left(\cos\frac{-\pi}{4} + i\sin\frac{-\pi}{4}\right)$
4. $\sqrt{2}\left(\cos\frac{3\pi}{4} + i\sin\frac{3\pi}{4}\right)$
5. $\sqrt{2}\left(\cos\frac{-3\pi}{4} + i\sin\frac{-3\pi}{4}\right)$
6. $3\,(\cos\pi + i\sin\pi)$
7. $2\left(\cos\frac{\pi}{6} + i\sin\frac{\pi}{6}\right)$
8. $\cos\frac{\pi}{2} + i\sin\frac{\pi}{2}$

EXERCISE 5.3

1. $\pm\sqrt{3}\,i$
2. $\frac{-1 \pm \sqrt{7}\,i}{4}$
3. $\frac{-3 \pm 3\sqrt{3}\,i}{2}$
4. $\frac{-1 \pm \sqrt{7}i}{-2}$
5. $\frac{-3 \pm \sqrt{11}\,i}{2}$
6. $\frac{1 \pm \sqrt{7}\,i}{2}$
7. $\frac{-1 \pm \sqrt{7}\,i}{2\sqrt{2}}$
8. $\frac{\sqrt{2} \pm \sqrt{34}\,i}{2\sqrt{3}}$
9. $\frac{1 \quad \sqrt{2\sqrt{2} \quad 1}\;i}{2}$
10. $\frac{-1 \pm \sqrt{7}\,i}{2\sqrt{2}}$

© NCERT not to be republished

Miscellaneous Exercise on Chapter 5

1. $2 - 2i$ **3.** $\dfrac{307+599i}{442}$

5. (i) $\sqrt{2}\left(\cos\dfrac{3\pi}{4}+i\sin\dfrac{3\pi}{4}\right)$, (ii) $\sqrt{2}\left(\cos\dfrac{3\pi}{4}+i\sin\dfrac{3\pi}{4}\right)$

6. $\dfrac{2}{3}\pm\dfrac{4}{3}i$ **7.** $1\pm\dfrac{\sqrt{2}}{2}i$ **8.** $\dfrac{5}{27}\pm\dfrac{\sqrt{2}}{27}i$ **9.** $\dfrac{2}{3}\pm\dfrac{\sqrt{14}}{21}i$

10. $\sqrt{2}$ **12.** (i) $\dfrac{-2}{5}$, (ii) 0 **13.** $\dfrac{1}{\sqrt{2}}, \dfrac{3\pi}{4}$ **14.** $x = 3, y = -3$

15. 2 **17.** 1 **18.** 0 **20.** 4

EXERCISE 6.1

1. (i) $\{1, 2, 3, 4\}$ (ii) $\{\ldots -3, -2, -1, 0, 1, 2, 3, 4,\}$

2. (i) No Solution (ii) $\{\ldots -4, -3\}$

3. (i) $\{\ldots -2, -1, 0, 1\}$ (ii) $(-\infty, 2)$

4. (i) $\{-1, 0, 1, 2, 3, \ldots\}$ (ii) $(-2, \infty)$

5. $(-4, \infty)$ **6.** $(-\infty, -3)$ **7.** $(-\infty, -3]$ **8.** $(-\infty, 4]$

9. $(-\infty, 6)$ **10.** $(-\infty, -6)$ **11.** $(-\infty, 2]$ **12.** $(-\infty, 120]$

13. $(4, \infty)$ **14.** $(-\infty, 2]$ **15.** $(4, \infty)$ **16.** $(-\infty, 2]$

17. $x < 3$,

18. $x \geq -1$,

19. $x > -1$,

20. $x \geq -\dfrac{2}{7}$,

21. Greater than or equal to 35 **22.** Greater than or equal to 82

23. (5,7), (7,9) **24.** (6,8), (8,10), (10,12)

25. 9 cm **26.** Greater than or equal to 8 but less than or equal to 22

© NCERT not to be republished

EXERCISE 6.2

1.

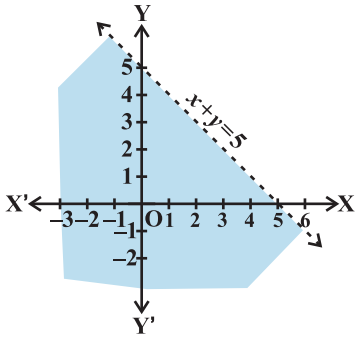

2.

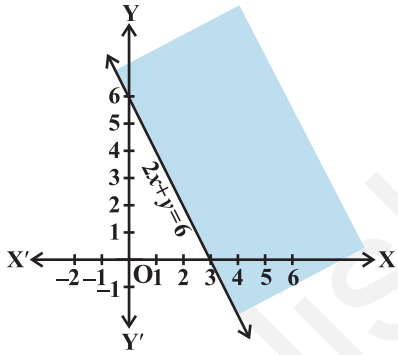

3.

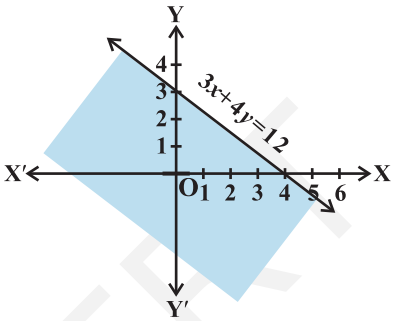

4.

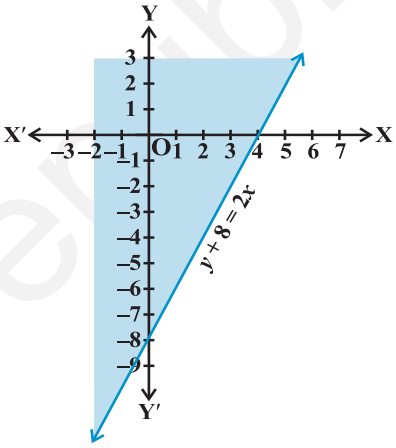

5.

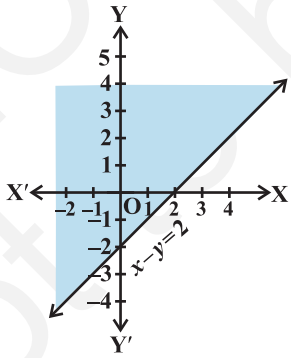

6.

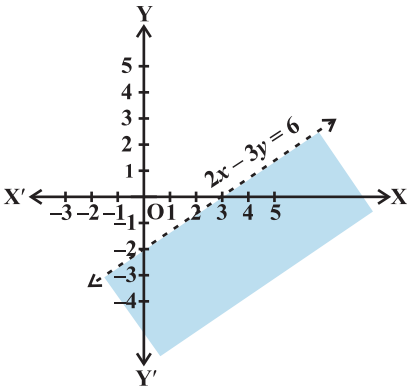

© NCERT not to be republished

7.

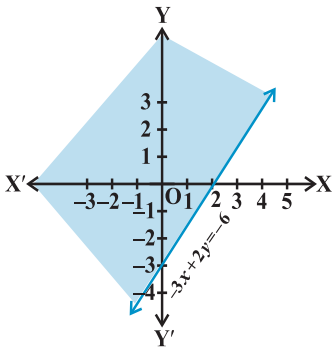

8.

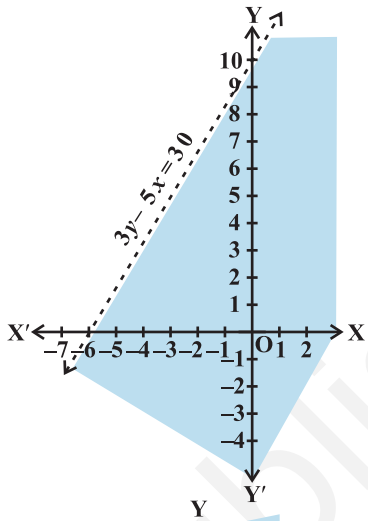

9.

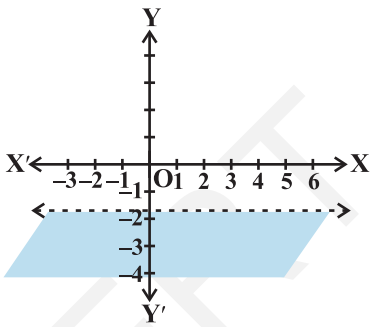

10.

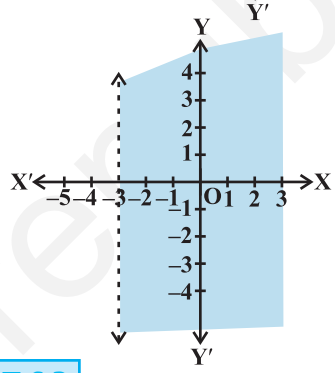

EXERCISE 6.3

1.

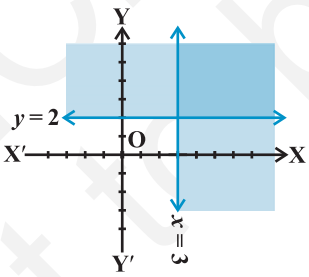

2.

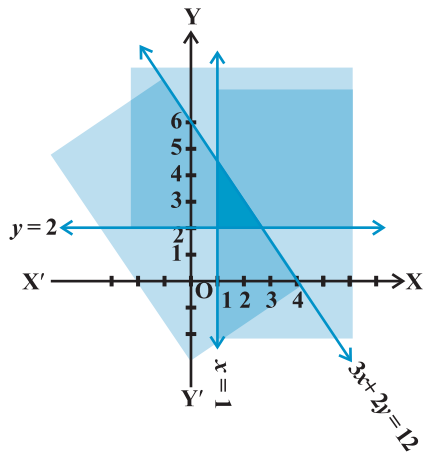

© NCERT not to be republished

3.

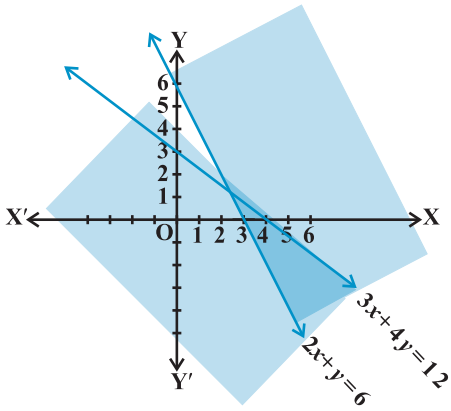

4.

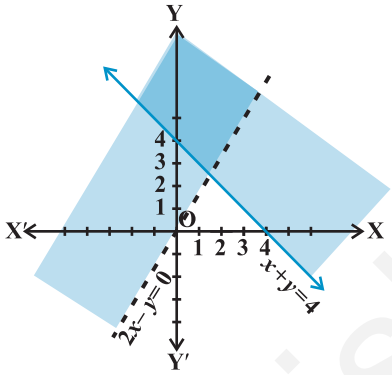

5.

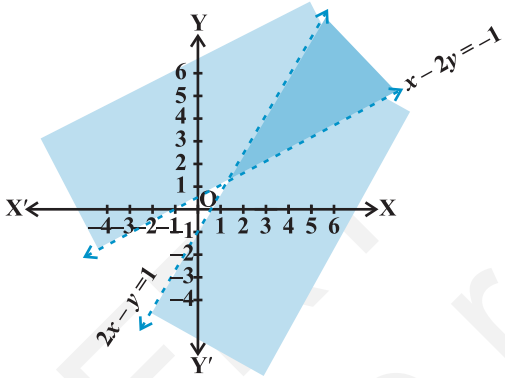

6.

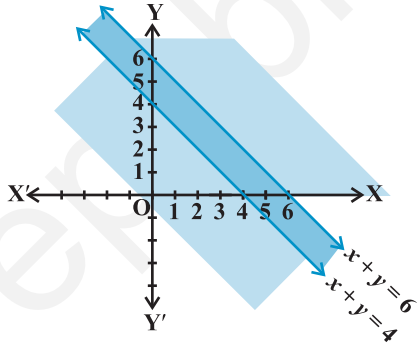

7.

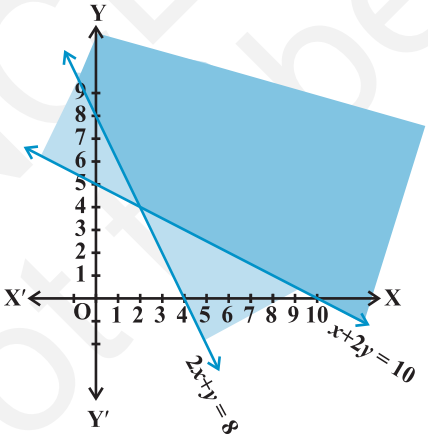

8.

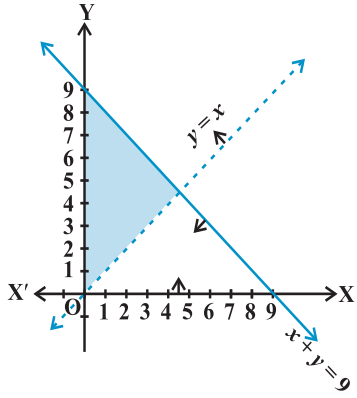

© NCERT not to be republished

9.

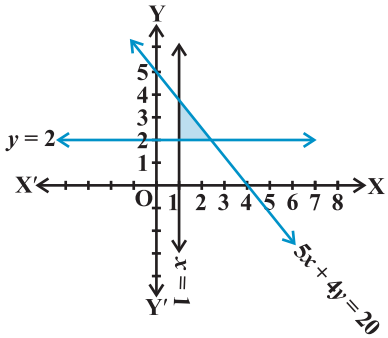

10.

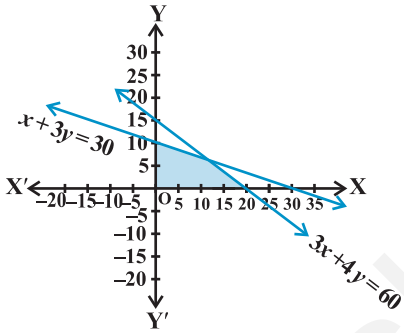

11.

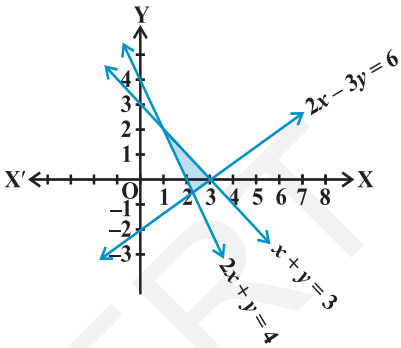

12.

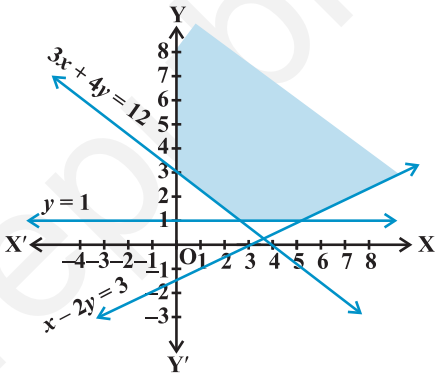

13.

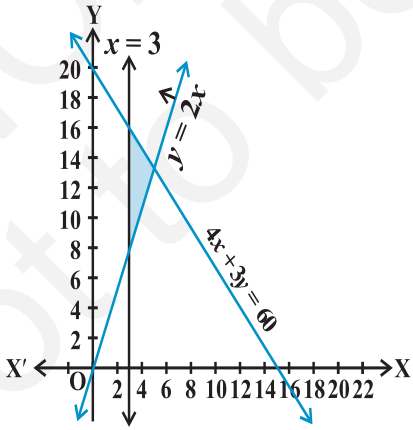

14.

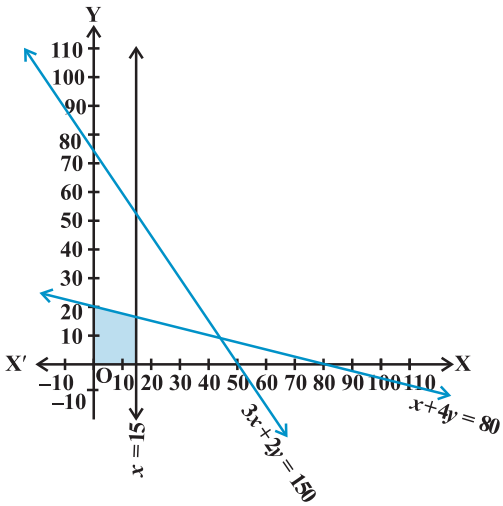

© NCERT not to be republished

15.

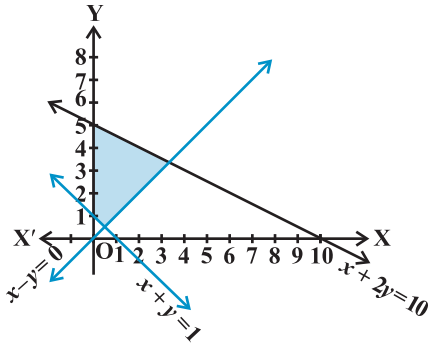

Miscellaneous Exercise on Chapter 6

1. [2, 3] **2.** (0, 1] **3.** [– 4, 2]

4. (– 23, 2] **5.** $\left(\frac{-80}{3}, \frac{-10}{3}\right]$ **6.** $\left[1, \frac{11}{3}\right]$

7. (–5, 5)

8. (–1, 7)

9. (5, ∞)

10. [– 7, 11]

11. Between 20°C and 25°C

12. More than 320 litres but less than 1280 litres.

13. More than 562.5 litres but less than 900 litres.

14. $9.6 \le MA \le 16.8$

EXERCISE 7.1

1. (i) 125, (ii) 60. **2.** 108 **3.** 5040 **4.** 336

5. 8 **6.** 20

© NCERT not to be republished

EXERCISE 7.2

1. (i) 40320, (ii) 18
2. 30, No
3. 28
4. 64
5. (i) 30, (ii) 15120

EXERCISE 7.3

1. 504
2. 4536
3. 60
4. 120, 48
5. 56
6. 9
7. (i) 3, (ii) 4
8. 40320
9. (i) 360, (ii) 720, (iii) 240
10. 33810
11. (i) 1814400, (ii) 2419200, (iii) 25401600

EXERCISE 7.4

1. 45
2. (i) 5, (ii) 6
3. 210
4. 40
5. 2000
6. 778320
7. 3960
8. 200
9. 35

Miscellaneous Exercise on Chapter 7

1. 3600
2. 1440
3. (i) 504, (ii) 588, (iii) 1632
4. 907200
5. 120
6. 50400
7. 420
8. ${}^{4}C_{1} \times {}^{48}C_{4}$
9. 2880
10. ${}^{22}C_{7} + {}^{22}C_{10}$
11. 151200

EXERCISE 8.1

1. $1 - 10x + 40x^2 - 80x^3 + 80x^4 - 32x^5$
2. $\frac{32}{x^5} \quad \frac{40}{x^3} \quad \frac{20}{x} \quad 5x \quad \frac{5}{8}x^3 \quad \frac{x^5}{32}$
3. $64x^6 - 576x^5 + 2160x^4 - 4320x^3 + 4860x^2 - 2916x + 729$
4. $\frac{x^5}{243} + \frac{5x^3}{81} + \frac{10}{27}x + \frac{10}{9x} + \frac{5}{3x^3} + \frac{1}{x^5}$
5. $x^6 \quad 6x^4 \quad 15x^2 \quad 20 \quad \frac{15}{x^2} \quad \frac{6}{x^4} \quad \frac{1}{x^6}$
6. 884736
7. 11040808032
8. 104060401
9. 9509900499
10. $(1.1)^{10000} > 1000$
11. $8(a^3b + ab^3)$; $40\sqrt{6}$
12. $2(x^6 + 15x^4 + 15x^2 + 1)$, 198

© NCERT not to be republished

EXERCISE 8.2

1. 1512
2. – 101376
3. $(-1)^r\ {}^6C_r . x^{12-2r} . y^r$
4. $(-1)^r\ {}^{12}C_r . x^{24-r} . y^r$
5. $-1760\ x^9y^3$
6. 18564
7. $\frac{-105}{8}x^9 ; \frac{35}{48}x^{12}$
8. $61236\ x^5y^5$
10. $n = 7; r = 3$
12. $m = 4$

Miscellaneous Exercise on Chapter 8

1. $a = 3; b = 5; n = 6$
2. $a = \frac{9}{7}$
3. 171
5. $396\sqrt{6}$
6. $2a^8 + 12a^6 - 10a^4 - 4a^2 + 2$
7. 0.9510
8. $n = 10$
9. $\frac{16}{x} + \frac{8}{x^2} - \frac{32}{x^3} + \frac{16}{x^4} - 4x + \frac{x^2}{2} + \frac{x^3}{2} + \frac{x^4}{16} - 5$
10. $27x^6 - 54ax^5 + 117a^2x^4 - 116a^3x^3 + 117a^4x^2 - 54a^5x + 27a^6$

EXERCISE 9.1

1. 3, 8, 15, 24, 35
2. $\frac{1}{2}, \frac{2}{3}, \frac{3}{4}, \frac{4}{5}, \frac{5}{6}$
3. 2, 4, 8, 16 and 32
4. $-\frac{1}{6}, \frac{1}{6}, \frac{1}{2}, \frac{5}{6}$ and $\frac{7}{6}$
5. 25, –125, 625, –3125, 15625
6. $\frac{3}{2}, \frac{9}{2}, \frac{21}{2}$, 21 and $\frac{75}{2}$
7. 65, 93
8. $\frac{49}{128}$
9. 729
10. $\frac{360}{23}$
11. 3, 11, 35, 107, 323; $3 + 11 + 35 + 107 + 323 + \ldots$
12. $-1, \frac{-1}{2}, \frac{-1}{6}, \frac{-1}{24}, \frac{-1}{120}; -1 + \left(\frac{-1}{2}\right) + \left(\frac{-1}{6}\right) + \left(\frac{-1}{24}\right) + \left(\frac{-1}{120}\right) + \ldots$

© NCERT not to be republished

13. 2, 2, 1, 0, –1; $2 + 2 + 1 + 0 + (-1) + \ldots$ **14.** $1, 2, \frac{3}{2}, \frac{5}{3}$ and $\frac{8}{5}$

EXERCISE 9.2

1. 1002001 **2.** 98450 **4.** 5 or 20 **6.** 4

7. $\frac{n}{2}(5n+7)$ **8.** $2q$ **9.** $\frac{179}{321}$ **10.** 0

13. 27 **14.** 11, 14, 17, 20 and 23 **15.** 1

16. 14 **17.** Rs 245 **18.** 9

EXERCISE 9.3

1. $\frac{5}{2^{20}}, \frac{5}{2^n}$ **2.** 3072 **4.** – 2187

5. (a) 13th, (b) 12th, (c) 9th **6.** ± 1 **7.** $\frac{1}{6}\left[1-(0.1)^{20}\right]$

8. $\frac{\sqrt{7}}{2}\left(\sqrt{3}+1\right)\left(3^{\frac{n}{2}}-1\right)$ **9.** $\frac{\left[1-(-a)^n\right]}{1+a}$ **10.** $\frac{x^3\left(1-x^{2n}\right)}{1-x^2}$

11. $22+\frac{3}{2}\left(3^{11}-1\right)$ **12.** $r=\frac{5}{2}$ or $\frac{2}{5}$; Terms are $\frac{2}{5}, 1, \frac{5}{2}$ or $\frac{5}{2}, 1, \frac{2}{5}$

13. 4 **14.** $\frac{16}{7}; 2; \frac{16}{7}\left(2^n-1\right)$ **15.** 2059

16. $\frac{-4}{3}, \frac{-8}{3}, \frac{-16}{3}, \ldots$ or $4, -8, 16, -32, 64, \ldots$ **18.** $\frac{80}{81}\left(10^n-1\right)-\frac{8}{9}n$

19. 496 **20.** rR **21.** 3, –6, 12, –24 **26.** 9 and 27

27. $n=\frac{-1}{2}$ **30.** 120, 480, 30 (2^n) **31.** Rs 500 $(1.1)^{10}$

32. $x^2 - 16x + 25 = 0$

EXERCISE 9.4

1. $\frac{n}{3}(n+1)(n+2)$ **2.** $\frac{n(n+1)(n+2)(n+3)}{4}$

© NCERT not to be republished

3. $\frac{n}{6}(n+1)(3n^2+5n+1)$ **4.** $\frac{n}{n+1}$ **5.** 2840

6. $3n(n+1)(n+3)$ **7.** $\frac{n(n+1)^2(n+2)}{12}$

8. $\frac{n(n+1)}{12}(3n^2+23n+34)$

9. $\frac{n}{6}(n+1)(2n+1)+2(2^n-1)$ **10.** $\frac{n}{3}(2n+1)(2n-1)$

Miscellaneous Exercise on Chapter 9

2. 5, 8, 11 **4.** 8729 **5.** 3050 **6.** 1210
7. 4 **8.** 160; 6 **9.** ± 3 **10.** 8, 16, 32
11. 4 **12.** 11

21. (i) $\frac{50}{81}(10^n-1)-\frac{5n}{9}$, (ii) $\frac{2n}{3}-\frac{2}{27}(1-10^{-n})$ **22.** 1680

23. $\frac{n}{3}(n^2+3n+5)$ **25.** $\frac{n}{24}(2n^2+9n+13)$

27. Rs 16680 **28.** Rs 39100 **29.** Rs 43690 **30.** Rs 17000; 20,000
31. Rs 5120 **32.** 25 days

EXERCISE 10.1

1. $\frac{121}{2}$ square unit.

2. $(0, a)$, $(0, -a)$ and $(-\sqrt{3}a, 0)$ or $(0, a)$, $(0, -a)$, and $(\sqrt{3}a, 0)$

3. (i) $|y_2-y_1|$, (ii) $|x_2-x_1|$ **4.** $\left(\frac{15}{2}, 0\right)$ **5.** $-\frac{1}{2}$

7. $-\sqrt{3}$ **8.** $x = 1$ **10.** 135°

11. 1 and 2, or $\frac{1}{2}$ and 1, or -1 and -2, or $-\frac{1}{2}$ and -1 **14.** $\frac{1}{2}$, 104.5 Crores

© NCERT not to be republished

EXERCISE 10.2

1. $y = 0$ and $x = 0$
2. $x - 2y + 10 = 0$
3. $y = mx$
4. $\left(\sqrt{3}+1\right)x-\left(\sqrt{3}-1\right)y=4\left(\sqrt{3}-1\right)$
5. $2x + y + 6 = 0$
6. $x-\sqrt{3}y+2\sqrt{3}=0$
7. $5x + 3y + 2 = 0$
8. $\sqrt{3}x+y=10$
9. $3x - 4y + 8 = 0$
10. $5x - y + 20 = 0$
11. $(1 + n)x + 3(1 + n)y = n + 11$
12. $x + y = 5$
13. $x + 2y - 6 = 0,\ 2x + y - 6 = 0$
14. $\sqrt{3}x+y-2=0$ and $\sqrt{3}x+y+2=0$
15. $2x - 9y + 85 = 0$
16. $\mathrm{L}=\frac{.192}{90}(\mathrm{C}-20)+124.942$
17. 1340 litres.
19. $2kx + hy = 3kh.$

EXERCISE 10.3

1. (i) $y=-\frac{1}{7}x+0,-\frac{1}{7},0;$ (ii) $y=-2x+\frac{5}{3},-2,\frac{5}{3};$ (iii) $y = 0x + 0, 0, 0$
2. (i) $\frac{x}{4}+\frac{y}{6}=1,4,6;$ (ii) $\frac{x}{\frac{3}{2}}+\frac{y}{-2}=1,\frac{3}{2},-2;$

   (iii) $y=-\frac{2}{3}$, intercept with y-axis $= -\frac{2}{3}$ and no intercept with x-axis.
3. (i) $x \cos 120° + y \sin 120° = 4, 4, 120°$ (ii) $x \cos 90° + y \sin 90° = 2, 2, 90°;$

   (iii) $x \cos 315° + y \sin 315° = 2\sqrt{2},\ 2\sqrt{2},\ 315°$
4. 5 units
5. $(-2, 0)$ and $(8, 0)$
6. (i) $\frac{65}{17}$ units, (ii) $\frac{1}{\sqrt{2}}\left|\frac{p+r}{l}\right|$ units.
7. $3x - 4y + 18 = 0$
8. $y + 7x = 21$
9. 30° and 150°
10. $\frac{22}{9}$
12. $\left(\sqrt{3}+2\right)x+\left(2\sqrt{3}-1\right)y=8\sqrt{3}+1$ or $\left(\sqrt{3}-2\right)x+\left(1+2\sqrt{3}\right)y=-1+8\sqrt{3}$

© NCERT not to be republished

13. $2x + y = 5$ **14.** $\left(\frac{68}{25}, -\frac{49}{25}\right)$ **15.** $m = \frac{1}{2}, c = \frac{5}{2}$

17. $y - x = 1, \sqrt{2}$

Miscellaneous Exercise on Chapter 10

1. (a) 3, (b) ± 2, (c) 6 or 1 **2.** $\frac{7\pi}{6}, 1$

3. $2x - 3y = 6, -3x + 2y = 6$ **4.** $\left(0, -\frac{8}{3}\right), \left(0, \frac{32}{3}\right)$

5. $\frac{|\sin(\ \ - \theta)|}{2\left|\sin \frac{\ \ - \theta}{2}\right|}$ **6.** $x = -\frac{5}{22}$ **7.** $2x - 3y + 18 = 0$

8. k^2 square units **9.** 5 **11.** $3x - y = 7, \quad x + 3y = 9$

12. $13x + 13y = 6$ **14.** 1 : 2 **15.** $\frac{23\sqrt{5}}{18}$ units

16. The line is parallel to x - axis or parallel to y-axis

17. $x = 1, \quad y = 1.$ **18.** $(-1, -4)$. **19.** $\frac{1 \pm 5\sqrt{2}}{7}$

21. $18x + 12y + 11 = 0$ **22.** $\left(\frac{13}{5}, 0\right)$ **24.** $119x + 102y = 125$

EXERCISE 11.1

1. $x^2 + y^2 - 4y = 0$ **2.** $x^2 + y^2 + 4x - 6y - 3 = 0$

3. $36x^2 + 36y^2 - 36x - 18y + 11 = 0$ **4.** $x^2 + y^2 - 2x - 2y = 0$

5. $x^2 + y^2 + 2ax + 2by + 2b^2 = 0$ **6.** $c(-5, 3), r = 6$

7. $c(2, 4), r = \sqrt{65}$ **8.** $c(4, -5), r = \sqrt{53}$ **9.** $c\left(\frac{1}{4}, 0\right); r = \frac{1}{4}$

10. $x^2 + y^2 - 6x - 8y + 15 = 0$ **11.** $x^2 + y^2 - 7x + 5y - 14 = 0$

12. $x^2 + y^2 + 4x - 21 = 0$ & $x^2 + y^2 - 12x + 11 = 0$

© NCERT not to be republished

13. $x^2 + y^2 - ax - by = 0$ **14.** $x^2 + y^2 - 4x - 4y = 5$

15. Inside the circle; since the distance of the point to the centre of the circle is less than the radius of the circle.

EXERCISE 11.2

1. F (3, 0), axis - x - axis, directrix $x = -3$, length of the Latus rectum = 12

2. F $(0, \frac{3}{2})$, axis - y - axis, directrix $y = -\frac{3}{2}$, length of the Latus rectum = 6

3. F (–2, 0), axis - x - axis, directrix $x = 2$, length of the Latus rectum = 8

4. F (0, –4), axis - y - axis, directrix $y = 4$, length of the Latus rectum = 16

5. F $(\frac{5}{2}, 0)$ axis - x - axis, directrix $x = -\frac{5}{2}$, length of the Latus rectum = 10

6. F $(0, \frac{-9}{4})$, axis - y - axis, directrix $y = \frac{9}{4}$, length of the Latus rectum = 9

7. $y^2 = 24x$ **8.** $x^2 = -12y$ **9.** $y^2 = 12x$

10. $y^2 = -8x$ **11.** $2y^2 = 9x$ **12.** $2x^2 = 25y$

EXERCISE 11.3

1. F $(\pm\sqrt{20}, 0)$; V $(\pm 6, 0)$; Major axis = 12; Minor axis = 8, $e = \frac{\sqrt{20}}{6}$,

Latus rectum = $\frac{16}{3}$

2. F $(0, \pm\sqrt{21})$; V $(0, \pm 5)$; Major axis = 10; Minor axis = 4, $e = \frac{\sqrt{21}}{5}$;

Latus rectum = $\frac{8}{5}$

3. F $(\pm\sqrt{7}, 0)$; V $(\pm 4, 0)$; Major axis = 8; Minor axis = 6, $e = \frac{\sqrt{7}}{4}$;

Latus rectum = $\frac{9}{2}$

© NCERT not to be republished

4. F $(0, \pm\sqrt{75})$; V $(0, \pm 10)$; Major axis = 20; Minor axis = 10 , $e = \frac{\sqrt{3}}{2}$;

Latus rectum = 5

5. F $(\pm\sqrt{13}, 0)$; V $(\pm 7, 0)$; Major axis =14 ; Minor axis = 12 , $e = \frac{\sqrt{13}}{7}$;

Latus rectum = $\frac{72}{7}$

6. F $(0, \pm 10\sqrt{3})$; V $(0, \pm 20)$; Major axis =40 ; Minor axis = 20 , $e = \frac{\sqrt{3}}{2}$;

Latus rectum = 10

7. F $(0, \pm 4\sqrt{2})$; V $(0, \pm 6)$; Major axis =12 ; Minor axis = 4 , $e = \frac{2\sqrt{2}}{3}$;

Latus rectum = $\frac{4}{3}$

8. F $\left(0, \pm\sqrt{15}\right)$; V $(0, \pm 4)$; Major axis = 8 ; Minor axis = 2 , $e = \frac{\sqrt{15}}{4}$;

Latus rectum = $\frac{1}{2}$

9. F $(\pm\sqrt{5}, 0)$; V $(\pm 3, 0)$; Major axis = 6 ; Minor axis = 4 , $e = \frac{\sqrt{5}}{3}$;

Latus rectum = $\frac{8}{3}$

10. $\frac{x^2}{25} + \frac{y^2}{9} = 1$

11. $\frac{x^2}{144} + \frac{y^2}{169} = 1$

12. $\frac{x^2}{36} + \frac{y^2}{20} = 1$

13. $\frac{x^2}{9} + \frac{y^2}{4} = 1$

14. $\frac{x^2}{1} + \frac{y^2}{5} = 1$

15. $\frac{x^2}{169} + \frac{y^2}{144} = 1$

16. $\frac{x^2}{64} + \frac{y^2}{100} = 1$

17. $\frac{x^2}{16} + \frac{y^2}{7} = 1$

18. $\frac{x^2}{25} + \frac{y^2}{9} = 1$

© NCERT not to be republished

19. $\frac{x^2}{10}+\frac{y^2}{40}=1$ **20.** $x^2 + 4y^2 = 52$ or $\frac{x^2}{52}+\frac{y^2}{13}=1$

EXERCISE 11.4

1. Foci $(\pm 5, 0)$, Vertices $(\pm 4, 0)$; $e = \frac{5}{4}$; Latus rectum $= \frac{9}{2}$

2. Foci (0 ± 6), Vertices $(0, \pm 3)$; $e = 2$; Latus rectum = 18

3. Foci $(0, \pm\sqrt{13})$, Vertices $(0, \pm 2)$; $e = \frac{\sqrt{13}}{2}$; Latus rectum $= 9$

4. Foci $(\pm 10, 0)$, Vertices $(\pm 6, 0)$; $e = \frac{5}{3}$; Latus rectum $= \frac{64}{3}$

5. Foci $(0, \pm\frac{2\sqrt{14}}{\sqrt{5}})$, Vertices $(0, \pm\frac{6}{\sqrt{5}})$; $e = \frac{\sqrt{14}}{3}$; Latus rectum $= \frac{4\sqrt{5}}{3}$

6. Foci $(0, \pm\sqrt{65})$, Vertices $(0, \pm 4)$; $e = \frac{\sqrt{65}}{4}$; Latus rectum $= \frac{49}{2}$

7. $\frac{x^2}{4}-\frac{y^2}{5}=1$ **8.** $\frac{y^2}{25}-\frac{x^2}{39}=1$ **9.** $\frac{y^2}{9}-\frac{x^2}{16}=1$

10. $\frac{x^2}{16}-\frac{y^2}{9}=1$ **11.** $\frac{y^2}{25}-\frac{x^2}{144}=1$ **12.** $\frac{x^2}{25}-\frac{y^2}{20}=1$

13. $\frac{x^2}{4}-\frac{y^2}{12}=1$ **14.** $\frac{x^2}{49}-\frac{9y^2}{343}=1$ **15.** $\frac{y^2}{5}-\frac{x^2}{5}=1$

Miscellaneous Exercise on Chapter 11

1. Focus is at the mid-point of the given diameter.

2. 2.23 m (approx.) **3.** 9.11 m (approx.) **4.** 1.56m (approx.)

5. $\frac{x^2}{81}+\frac{y^2}{9}=1$ **6.** 18 sq units **7.** $\frac{x^2}{25}+\frac{y^2}{9}=1$

8. $8\sqrt{3}a$

© NCERT not to be republished

EXERCISE 12.1

1. y and z - coordinates are zero
2. y - coordinate is zero
3. I, IV, VIII, V, VI, II, III, VII
4. (i) XY - plane (ii) $(x, y, 0)$ (iii) Eight

EXERCISE 12.2

1. (i) $2\sqrt{5}$ (ii) $\sqrt{43}$ (iii) $2\sqrt{26}$ (iv) $2\sqrt{5}$
4. $x - 2z = 0$
5. $9x^2 + 25y^2 + 25z^2 - 225 = 0$

EXERCISE 12.3

1. (i) $\left(\frac{-4}{5}, \frac{1}{5}, \frac{27}{5}\right)$ (ii) $(-8, 17, 3)$
2. $1 : 2$
3. $2 : 3$
5. $(6, -4, -2), (8, -10, 2)$

Miscellaneous Exercise on Chapter 12

1. $(1, -2, 8)$
2. $7, \sqrt{34}, 7$
3. $a = -2,\ b = -\frac{16}{3},\ c = 2$
4. $(0, 2, 0)$ and $(0, -6, 0)$
5. $(4, -2, 6)$
6. $x^2 + y^2 + z^2 - 2x - 7y + 2z = \frac{k^2 - 109}{2}$

EXERCISE 13.1

1. 6
2. $\left(\pi - \frac{22}{7}\right)$
3. π
4. $\frac{19}{2}$
5. $-\frac{1}{2}$
6. 5
7. $\frac{11}{4}$
8. $\frac{108}{7}$
9. b
10. 2
11. 1
12. $-\frac{1}{4}$
13. $\frac{a}{b}$
14. $\frac{a}{b}$
15. $\frac{1}{\pi}$
16. $\frac{1}{\pi}$

© NCERT not to be republished

17. 4 **18.** $\frac{a+1}{b}$ **19.** 0 **20.** 1

21. 0 **22.** 2 **23.** 3, 6

24. Limit does not exist at $x = 1$

25. Limit does not exist at $x = 0$ **26.** Limit does not exist at $x = 0$

27. 0 **28.** $a = 0, b = 4$

29. $\lim_{x \to a_1} f(x) = 0$ and $\lim_{x \to a} f(x) = (a - a_1)(a - a_2) \ldots (a - a_x)$

30. $\lim_{x \to a} f(x)$ exists for all $a \neq 0$. **31.** 2

32. For $\lim_{x \to 0} f(x)$ to exists, we need $m = n$; $\lim_{x \to 1} f(x)$ exists for any integral value of m and n.

EXERCISE 13.2

1. 20 **2.** 99 **3.** 1

4. (i) $3x^2$ (ii) $2x - 3$ (iii) $\frac{-2}{x^3}$ (iv) $\frac{-2}{(x-1)^2}$

6. $nx^{n-1} + a(n-1)x^{n-2} + a^2(n-2)x^{n-3} + \ldots + a^{n-1}$

7. (i) $2x - a - b$ (ii) $4ax(ax^2 + b)$ (iii) $\frac{a-b}{(x-b)^2}$

8. $\frac{nx^n - anx^{n-1} - x^n + a^n}{(x-a)^2}$

9. (i) 2 (ii) $20x^3 - 15x^2 + 6x - 4$ (iii) $\frac{-3}{x^4}(5 + 2x)$ (iv) $15x^4 + \frac{24}{x^5}$

(v) $\frac{-12}{x^5} + \frac{36}{x^{10}}$ (vi) $\frac{-2}{(x+1)^2} - \frac{x(3x-2)}{(3x-1)^2}$ **10.** $-\sin x$

11. (i) $\cos 2x$ (ii) $\sec x \tan x$

(iii) $5\sec x \tan x - 4\sin x$ (iv) $-\operatorname{cosec} x \cot x$

(v) $-3\operatorname{cosec}^2 x - 5 \operatorname{cosec} x \cot x$ (vi) $5\cos x + 6\sin x$

(vii) $2\sec^2 x - 7\sec x \tan x$

© NCERT not to be republished

Miscellaneous Exercise on Chapter 13

1. (i) – 1 (ii) $\frac{1}{x^2}$ (iii) cos $(x + 1)$ (iv) $-\sin\left(x-\frac{\pi}{8}\right)$

2. 1

3. $\frac{qr}{x^2}$ ps

4. $2c\,(ax+b)\,(cx + d) + a\,(cx + d)^2$

5. $\frac{ad \quad bc}{cx \quad d}^{2}$

6. $\frac{-2}{(x-1)^2}$, $x \neq 0,1$

7. $\frac{2ax \quad b}{ax^2 \quad bx \quad c}^{2}$

8. $\frac{-apx^2-2bpx+ar-bq}{\left(px^2+qx+r\right)^2}$

9. $\frac{apx^2 \quad 2bpx \quad bq \quad ar}{ax \quad b}^{2}$

10. $\frac{4a}{x^5} \quad \frac{2b}{x^3} \quad \sin x$

11. $\frac{2}{\sqrt{x}}$

12. $na(ax+b)^{n-1}$

13. $(ax+b)^{n-1}(cx+d)^{m-1}\left[mc(ax+b)+na(cx+d)\right]$

14. cos $(x+a)$

15. $-$ cosec^3 x $-$ cosec x cot^2 x

16. $\frac{1}{1 \quad \sin x}$

17. $\frac{2}{\sin x \quad \cos x}^{2}$

18. $\frac{2\sec x \tan x}{\sec x \quad 1}^{2}$

19. $n \sin^{n-1} x \cos x$

20. $\frac{bc \cos x \quad ad \sin x \quad bd}{c \quad d \cos x}^{2}$

21. $\frac{\cos a}{\cos^2 x}$

22. $x^3 \quad 5x \cos x \quad 3x \sin x \quad 20 \sin x \quad 12\cos x$

23. $x^2 \sin x \quad \sin x \quad 2x \cos x$

24. $q \sin x \quad ax^2 \quad \sin x \quad p \quad q \cos x \quad 2a\,x \quad \cos x$

25. $\tan^2 x \quad x \quad \cos x \quad x \quad \tan x \quad 1 \quad \sin x$

26. $\frac{35 \quad 15x \cos x \quad 28 \cos x \quad 28x \sin x \quad 15\sin x}{3x \quad 7 \cos x}^{2}$

© NCERT not to be republished

27. $\dfrac{x\cos\frac{\pi}{4}\quad 2\sin x\quad x\cos x}{\sin^2 x}$

28. $\dfrac{1\quad \tan x\quad x\sec^2 x}{1\quad \tan x\quad {}^{2}}$

29. $x\quad \sec x\quad 1\quad \sec^2 x\qquad x\quad \tan x\ .\ 1\quad \sec x\tan x$

30. $\dfrac{\sin x\quad n\,x\cos x}{\sin^{n\ 1} x}$

EXERCISE 14.1

1. (i) This sentence is always false because the maximum number of days in a month is 31. Therefore, it is a statement.

(ii) This is not a statement because for some people mathematics can be easy and for some others it can be difficult.

(iii) This sentence is always true because the sum is 12 and it is greater than 10. Therefore, it is a statement.

(iv) This sentence is sometimes true and sometimes not true. For example the square of 2 is even number and the square of 3 is an odd number. Therefore, it is not a statement.

(v) This sentence is sometimes true and sometimes false. For example, squares and rhombus have equal length whereas rectangles and trapezium have unequal length. Therefore, it is not a statement.

(vi) It is an order and therefore, is not a statement.

(vii) This sentence is false as the product is (–8). Therefore, it is a statement.

(viii) This sentence is always true and therefore, it is a statement.

(ix) It is not clear from the context which day is referred and therefore, it is not a statement.

(x) This is a true statement because all real numbers can be written in the form $a + i \times 0$.

2. The three examples can be:

(i) Everyone in this room is bold. This is not a statement because from the context it is not clear which room is referred here and the term bold is not precisely defined.

(ii) She is an engineering student. This is also not a statement because who 'she' is.

(iii) "$\cos^2\theta$ is always greater than 1/2". Unless, we know what θ is, we cannot say whether the sentence is true or not.

© NCERT not to be republished

EXERCISES 14.2

1. (i) Chennai is not the capital of Tamil Nadu.

(ii) $\sqrt{2}$ is a complex number.

(iii) All triangles are equilateral triangles.

(iv) The number 2 is not greater than 7.

(v) Every natural number is not an integer.

2. (i) The negation of the first statement is "the number x is a rational number." which is the same as the second statement" This is because when a number is not irrational, it is a rational. Therefore, the given pairs are negations of each other.

(ii) The negation of the first statement is "x is an irrational number" which is the same as the second statement. Therefore, the pairs are negations of each other.

3. (i) Number 3 is prime; number 3 is odd (True).

(ii) All integers are positive; all integers are negative (False).

(iii) 100 is divisible by 3,100 is divisible by 11 and 100 is divisible by 5 (False).

EXERCISE 14.3

1. (i) "And". The component statements are:
All rational numbers are real.
All real numbers are not complex.

(ii) "Or". The component statements are:
Square of an integer is positive.
Square of an integer is negative.

(iii) "And". the component statements are:
The sand heats up quickily in the sun.
The sand does not cool down fast at night.

(iv) "And". The component statements are:
$x = 2$ is a root of the equation $3x^2 - x - 10 = 0$
$x = 3$ is a root of the equation $3x^2 - x - 10 = 0$

2. (i) "There exists". The negation is
There does not exist a number which is equal to its square.

(ii) "For every". The negation is
There exists a real number x such that x is not less than $x + 1$.

(iii) "There exists". The negation is
There exists a state in India which does not have a capital.

© NCERT not to be republished

3. No. The negation of the statement in (i) is "There exists real number x and y for which $x + y \neq y + x$", instead of the statement given in (ii).

4. (i) Exclusive
(ii) Inclusive
(iii) Exclusive

EXERCISE 14.4

1. (i) A natural number is odd implies that its square is odd.
(ii) A natural number is odd only if its square is odd.
(iii) For a natural number to be odd it is necessary that its square is odd.
(iv) For the square of a natural number to be odd, it is sufficient that the number is odd
(v) If the square of a natural number is not odd, then the natural number is not odd.

2. (i) The contrapositive is
If a number x is not odd, then x is not a prime number.
The converse is
If a number x in odd, then it is a prime number.
(ii) The contrapositive is
If two lines intersect in the same plane, then they are not parallel
The converse is
If two lines do not interesect in the same plane, then they are parallel
(iii) The contrapositive is
If something is not at low temperature, then it is not cold
The converse is
If something is at low temperature, then it is cold
(iv) The contrapositive is
If you know how to reason deductively, then you can comprehend geometry.
The converse is
If you do not know how to reason deductively, then you can not comprehend geometry.
(v) This statement can be written as "If x is an even number, then x is divisible by 4".
The contrapositive is, If x is not divisible by 4, then x is not an even number.
The converse is, If x is divisible by 4, then x is an even number.

3. (i) If you get a job, then your credentials are good.
(ii) If the banana tree stays warm for a month, then it will bloom.

© NCERT not to be republished

(iii) If diagonals of a quadrilateral bisect each other, then it is a parallelogram.
(iv) If you get A^+ in the class, then you do all the exercises in the book.

4. **a** (i) Contrapositive
(ii) Converse
b (i) Contrapositive
(ii) Converse

EXERCISE 14.5

5. (i) False. By definition of the chord, it should intersect the circle in two points.
(ii) False. This can be shown by giving a counter example. A chord which is not a dimaeter gives the counter example.
(iii) True. In the equation of an ellipse if we put $a = b$, then it is a circle (Direct Method)
(iv) True, by the rule of inequality
(v) False. Since 11 is a prime number, therefore $\sqrt{11}$ is irrational.

Miscellaneous Exercise on Chapter 14

1. (i) There exists a positive real number x such that x–1 is not positive.
(ii) There exists a cat which does not scratch.
(iii) There exists a real number x such that neither $x > 1$ nor $x < 1$.
(iv) There does not exist a number x such that $0 < x < 1$.

2. (i) The statement can be written as "If a positive integer is prime, then it has no divisors other than 1 and itself.
The converse of the statement is
If a positive integer has no divisors other than 1 and itself, then it is a prime.
The contrapositive of the statement is
If positive integer has divisors other than 1 and itself then it is not prime.
(ii) The given statement can be written as "If it is a sunny day, then I go to a beach.
The converse of the statement is
If I go to beach, then it is a sunny day.
The contrapositive is
If I do not go to a beach, then it is not a sunny day.
(iii) The converse is
If you feel thirsty, then it is hot outside.
The contrapositive is
If you do not feel thirsty, then it is not hot outside.

© NCERT not to be republished

3. (i) If you log on to the server, then you have a password.
(ii) If it rains, then there is traffic jam.
(iii) If you can access the website, then you pay a subscription fee.

4. (i) You watch television if and only if your mind in free.
(ii) You get an A grade if and only if you do all the homework regularly.
(iii) A quadrilateral is equiangular if and only if it is a rectangle.

5. The compound statement with "And" is 25 is a multiple of 5 and 8
This is a false statement.
The compound statement with "Or" is 25 is a multiple of 5 or 8
This is true statement.

7. Same as Q1 in Exercise 14.4

EXERCISE 15.1

1. 3 **2.** 8.4 **3.** 2.33 **4.** 7
5. 6.32 **6.** 16 **7.** 3.23 **8.** 5.1
9. 157.92 **10.** 11.28 **11.** 10.34 **12.** 7.35

EXERCISE 15.2

1. 9, 9.25 **2.** $\frac{n+1}{2}, \frac{n^2-1}{12}$ **3.** 16.5, 74.25 **4.** 19, 43.4
5. 100, 29.09 **6.** 64, 1.69 **7.** 107, 2276 **8.** 27, 132
9. 93, 105.52, 10.27 **10.** 5.55, 43.5

EXERCISE 15.3

1. B **2.** Y **3.** (i) B, (ii) B
4. A **5.** Weight

Miscellaneous Exercise on Chapter 15

1. 4, 8 **2.** 6, 8 **3.** 24, 12
5. (i) 10.1, 1.99 (ii) 10.2, 1.98
6. Highest Chemistry and lowest Mathematics **7.** 20, 3.036

© NCERT not to be republished

EXERCISE 16.1

1. {HHH, HHT, HTH, THH, TTH, HTT, THT, TTT}
2. $\{(x, y) : x, y = 1,2,3,4,5,6\}$
or {(1,1), (1,2), (1,3), ..., (1,6), (2,1), (2,2), ..., (2,6), ..., (6, 1), (6, 2), ..., (6,6)}
3. {HHHH, HHHT, HHTH, HTHH, THHH, HHTT, HTHT, HTTH, THHT, THTH, TTHH, HTTT, THTT, TTHT, TTTH, TTTT}
4. {H1, H2, H3, H4, H5, H6, T1, T2, T3, T4, T5, T6}
5. {H1, H2, H3, H4, H5, H6, T}
6. $\{XB_1, XB_2, XG_1, XG_2, YB_3, YG_3, YG_4, YG_5\}$
7. {R1, R2, R3, R4, R5, R6, W1, W2, W3, W4, W5, W6, B1, B2, B3, B4, B5, B6}
8. (i) {BB, BG, GB, GG} (ii) {0, 1, 2}
9. {RW, WR, WW}
10. [HH, HT, T1, T2, T3, T4, T5, T6}
11. {DDD, DDN, DND, NDD, DNN, NDN, NND, NNN}
12. {T, H1, H3, H5, H21, H22, H23, H24, H25, H26, H41, H42, H43, H44, H45, H46, H61, H62, H63, H64, H65, H66}
13. {(1,2), (1,3), (1,4), (2,1), (2,3), (2,4), (3,1), (3,2), (3,4), (4,1), (4,2), (4,3)}
14. {1HH, 1HT, 1TH, 1TT, 2H, 2T, 3HH, 3HT, 3TH, 3TT, 4H, 4T, 5HH, 5HT, 5TH, 5TT, 6H, 6T}
15. $\{TR_1, TR_2, TB_1, TB_2, TB_3, H1, H2, H3, H4, H5, H6\}$
16. {6, (1,6), (2,6), (3,6), (4,6), (5,6), (1,1,6), (1,2,6), ..., (1,5,6), (2,1,6). (2,2,6), ..., (2,5,6), ..., (5,1,6), (5,2,6), ... }

EXERCISE 16.2

1. No.
2. (i) {1, 2, 3, 4, 5, 6} (ii) ϕ (iii) {3, 6} (iv) {1, 2, 3} (v) {6}
(vi) {3, 4, 5, 6}, $A \cup B = \{1, 2, 3, 4, 5, 6\}$, $A \cap B = \phi$, $B \cup C = \{3, 6\}$, $E \cap F = \{6\}$, $D \cap E = \phi$,
$A - C = \{1, 2,4,5\}$, $D - E = \{1,2,3\}$, $E \cap F' = \phi$, $F' = \{1, 2\}$
3. A = {(3,6), (4,5), (5, 4), (6,3), (4,6), (5,5), (6,4), (5,6), (6,5), (6,6)}
B = {(1,2), (2,2), (3, 2), (4,2), (5,2), (6,2), (2,1), (2,3), (2,4), (2,5), (2,6)}
C ={(3,6), (6,3), (5, 4), (4,5), (6,6)}
A and B, B and C are mutually exclusive.
4. (i) A and B; A and C; B and C; C and D (ii) A and C (iii) B and D
5. (i) "Getting at least two heads", and "getting at least two tails"
(ii) "Getting no heads", "getting exactly one head" and "getting at least two heads"

© NCERT not to be republished

(iii) "Getting at most two tails", and "getting exactly two tails"
(iv) "Getting exactly one head" and "getting exactly two heads"
(v) "Getting exactly one tail", "getting exactly two tails", and getting exactly three tails"

Note There may be other events also as answer to the above question.

6. A = {(2, 1), (2,2), (2,3), (2,4), (2,5), (2,6), (4,1), (4,2), (4,3), (4,4), (4,5), (4,6), (6,1), (6,2), (6,3), (6,4), (6,5), (6,6)}

B = {(1, 1), (1,2), (1,3), (1,4), (1,5), (1,6), (3,1), (3,2), (3,3), (3,4), (3,5), (3,6), (5,1), (5,2), (5,3), (5,4), (5,5), (5,6)}

C = {(1, 1), (1,2), (1,3), (1,4), (2,1), (2,2), (2,3), (3,1), (3,2), (4,1)}

(i) A′ = {(1,1), (1,2), (1,3), (1,4), (1,5), (1,6), (3,1), (3,2), (3,3), (3,4), (3,5), (3,6), (5,1), (5,2), (5,3), (5,4), (5,5), (5,6)} = B

(ii) B′ = {(2,1), (2,2), (2,3), (2,4), (2,5), (2,6), (4,1), (4,2), (4,3), (4,4), (4,5), (4,6), (6,1), (6,2), (6,3), (6,4), (6,5), (6,6)} = A

(iii) A∪B = {(1,1), (1,2), (1,3), (1,4), (1,5), (1,6), (3,1), (3,2), (3,3), (3,4), (3,5), (3,6), (5,1), (5,2), (5,3), (5,4), (5,5), (5,6), (2,1), (2,2), (2,3), (2,5), (2,6), (4,1), (4,2), (4,3), (4,4), (4,5), (4,6), (6,1), (6,2), (6,3), (6,4), (6,5), (6,6)} = S

(iv) $A \cap B = \phi$

(v) A – C = {(2,4), (2,5), (2,6), (4,2), (4,3), (4,4), (4,5), (4,6), (6,1), (6,2), (6,3), (6,4), (6,5), (6,6)}

(vi) B ∪ C = {(1,1), (1,2), (1,3), (1,4), (1,5), (1,6), (2,1), (2,2), (2,3), (3,1), (3,2), (3,3), (3,4), (3,5), (3,6), (4,1), (5,1), (5,2), (5,3), (5,4), (5,5), (5,6)}

(vii) B ∩ C = {(1,1), (1,2), (1,3), (1,4), (3,1), (3,2)}

(viii) A ∩ B′ ∩ C′ = {(2,4), (2,5), (2,6), (4,2), (4,3), (4,4), (4,5), (4,6), (6,1), (6,2), (6,3), (6,4), (6,5), (6,6)}

7. (i) True (ii) True (iii) True (iv) False (v) False (vi) False

EXERCISE 16.3

1. (a) Yes (b) Yes (c) No (d) No (e) No **2.** $\frac{3}{4}$

3. (i) $\frac{1}{2}$ (ii) $\frac{2}{3}$ (iii) $\frac{1}{6}$ (iv) 0 (v) $\frac{5}{6}$

4. (a) 52 (b) $\frac{1}{52}$ (c) (i) $\frac{1}{13}$ (ii) $\frac{1}{2}$

5. (i) $\frac{1}{12}$ (ii) $\frac{1}{12}$

6. $\frac{3}{5}$

© NCERT not to be republished

7. Rs 4.00 gain, Rs 1.50 gain, Re 1.00 loss, Rs 3.50 loss, Rs 6.00 loss.

P (Winning Rs 4.00) $=\frac{1}{16}$, P(Winning Rs 1.50) $=\frac{1}{4}$, P (Losing Re. 1.00) $=\frac{3}{8}$

P (Losing Rs 3.50) $=\frac{1}{4}$, P (Losing Rs 6.00) $=\frac{1}{16}$.

8. (i) $\frac{1}{8}$ (ii) $\frac{3}{8}$ (iii) $\frac{1}{2}$ (iv) $\frac{7}{8}$ (v) $\frac{1}{8}$ (vi) $\frac{1}{8}$ (vii) $\frac{3}{8}$ (viii) $\frac{1}{8}$ (ix) $\frac{7}{8}$

9. $\frac{9}{11}$ **10.** (i) $\frac{6}{13}$ (ii) $\frac{7}{13}$ **11.** $\frac{1}{38760}$

12. (i) No, because $P(A\cap B)$ must be less than or equal to P(A) and P(B), (ii) Yes

13. (i) $\frac{7}{15}$ (ii) 0.5 (iii) 0.15 **14.** $\frac{4}{5}$

15. (i) $\frac{5}{8}$ (ii) $\frac{3}{8}$ **16.** No **17.** (i) 0.58 (ii) 0.52 (iii) 0.74

18. 0.6 **19.** 0.55 **20.** 0.65

21. (i) $\frac{19}{30}$ (ii) $\frac{11}{30}$ (iii) $\frac{2}{15}$

Miscellaneous Exercise on Chapter 16

1. (i) $\frac{{}^{20}C_5}{{}^{60}C_5}$ (ii) $1-\frac{{}^{30}C_5}{{}^{60}C_5}$ **2.** $\frac{{}^{13}C_3 \cdot {}^{13}C_1}{{}^{52}C_4}$

3. (i) $\frac{1}{2}$ (ii) $\frac{1}{2}$ (iii) $\frac{5}{6}$ **4.** (a) $\frac{999}{1000}$ (b) $\frac{{}^{9990}C_2}{{}^{10000}C_2}$ (c) $\frac{{}^{9990}C_{10}}{{}^{10000}C_{10}}$

5. (a) $\frac{17}{33}$ (b) $\frac{16}{33}$ **6.** $\frac{2}{3}$

7. (i) 0.88 (ii) 0.12 (iii) 0.19 (iv) 0.34 **8.** $\frac{4}{5}$

9. (i) $\frac{33}{83}$ (ii) $\frac{3}{8}$ **10.** $\frac{1}{5040}$

© NCERT not to be republished