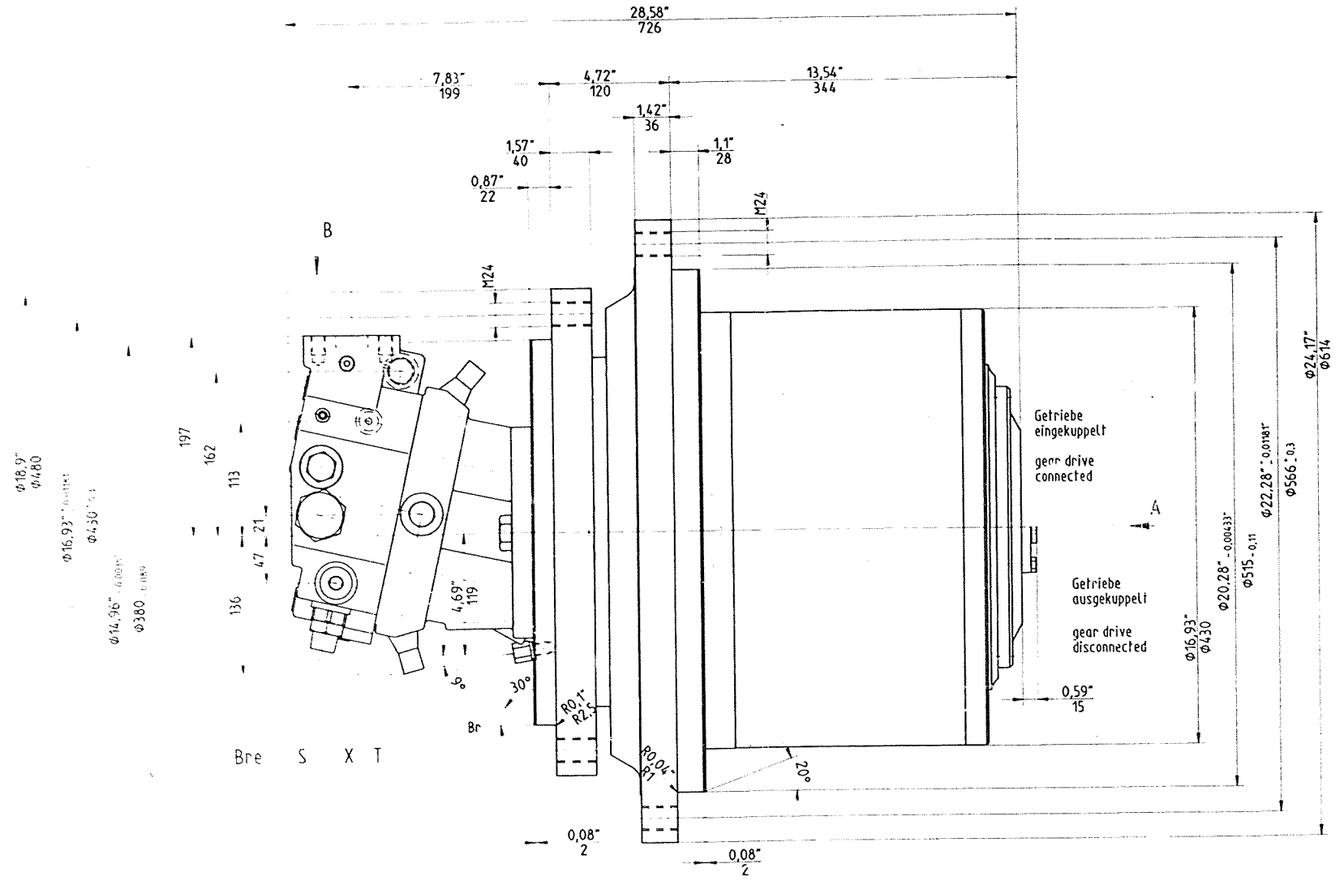

HINWEIS !
Das Getriebe hat eine Auskuppelvorrichtung.
ACHTUNG !
Vor Benutzung der Auskuppelvorrichtung müssen die Hinweise der L+S Betriebsanleitung beachtet werden.

ATTENTION !
This gear drive has a disconnect mechanism.
CAUTION !
Observe the instruction in the L+S manual before activating the disconnect mechanism.

Ansicht ohne Motor
view without motor

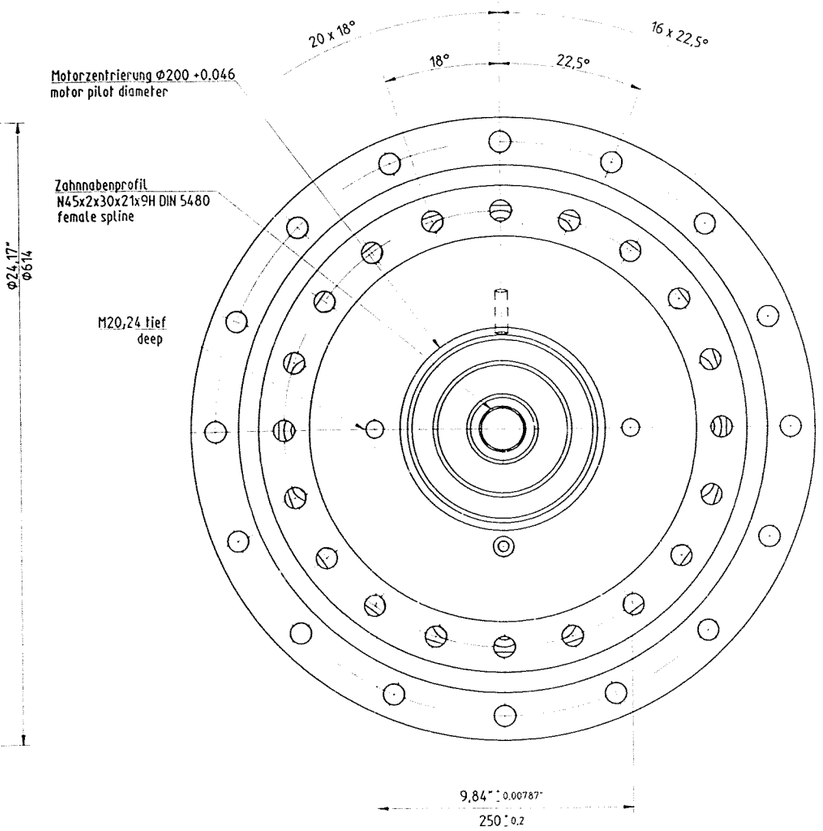

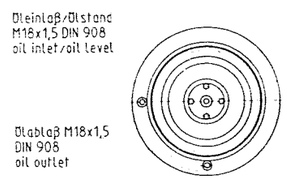

Ölein laß/Ölstand
M18x1,5 DIN 908
oil inlet/oil level

Ansicht: A
view

Auskuppelvorrichtung
disconnect mechanism

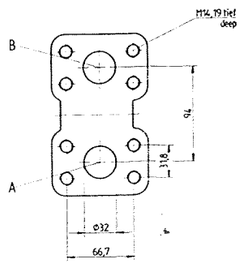

Ansicht B
view

A,B	Arbeitsanschlüsse service ports	SAE 1 1/4"	
X	Steuerdruckanschluß pilot pressure port	M14x1,5	
T	Leckölanschluß case drain port	M26x1,5	
S	Einspeisung (verschlossen) boosting (plugged)	M27x2	
Bre	Bremssteueranschluß (extern) brake control port (verschlossen,plugged)	M14x1,5	
MA,MB	Meßanschluß (verschlossen) measuring port (plugged)	M14x1,5	
Br	Bremsanschluß brake release port	M12x1,5	mit Adapter 7/16-20UNF-2B with adapter

Technische Daten				technical data			
Antriebsdrehmoment	T1max.	666	Nm	input torque	T1max.	492	ft.lbs
Antriebsdrehzahl	n1max.	3069	1/min	input speed	n1max.	3069	rpm
Übersetzung	i	99		ratio	i	99	
Abtriebsdrehmoment	T2max.	65860	Nm	output torque	T2max.	48572	ft.lbs
Abtriebsdrehzahl	n2max.	31	1/min	output speed	n2max.	31	rpm
Federdruck-Lamellenbremse				**spring applied,multi disk brake**			
Bremsmoment,statisch	TBr	1060	Nm	static brake torque	TBr	782	ft.lbs
Lüftdruck	p	18	bar	release pressure	p	261	psi
max.Lüftdruck	pmax.	50	bar	max.release pressure	pmax.	725	psi
Hydraulik-Motor				**hydraulic-motor**			
A6VE 160HZ3/63W-VZL222B				A6VE 160HZ3/63W-VZL222B			
Vgmin.= 58 ccm				Vgmin.= 3.538 cu.in.			
Sekundärventile eingestellt auf 345 bar				relief valves set to 5003 psi			
Regelbeginn: 10 bar				begin of control at 145 psi			

Toleranzen nach
Werkstoff:
Fertiggewicht: ca. 470 kg
Maße ohne Toleranzangabe

	Tag	Name
Bearb.	24.11.97	
Gepr.		
Ges.	22.10.97	Bärner

LEHMANN-STOCKHERCHT GmbH
Witten

GFT 80 T3 9229
Fahrgetriebe/propel drive

Maßstab 1:2

0/6156/5229/0

CAD

Nr	Änderung	Tag	Name

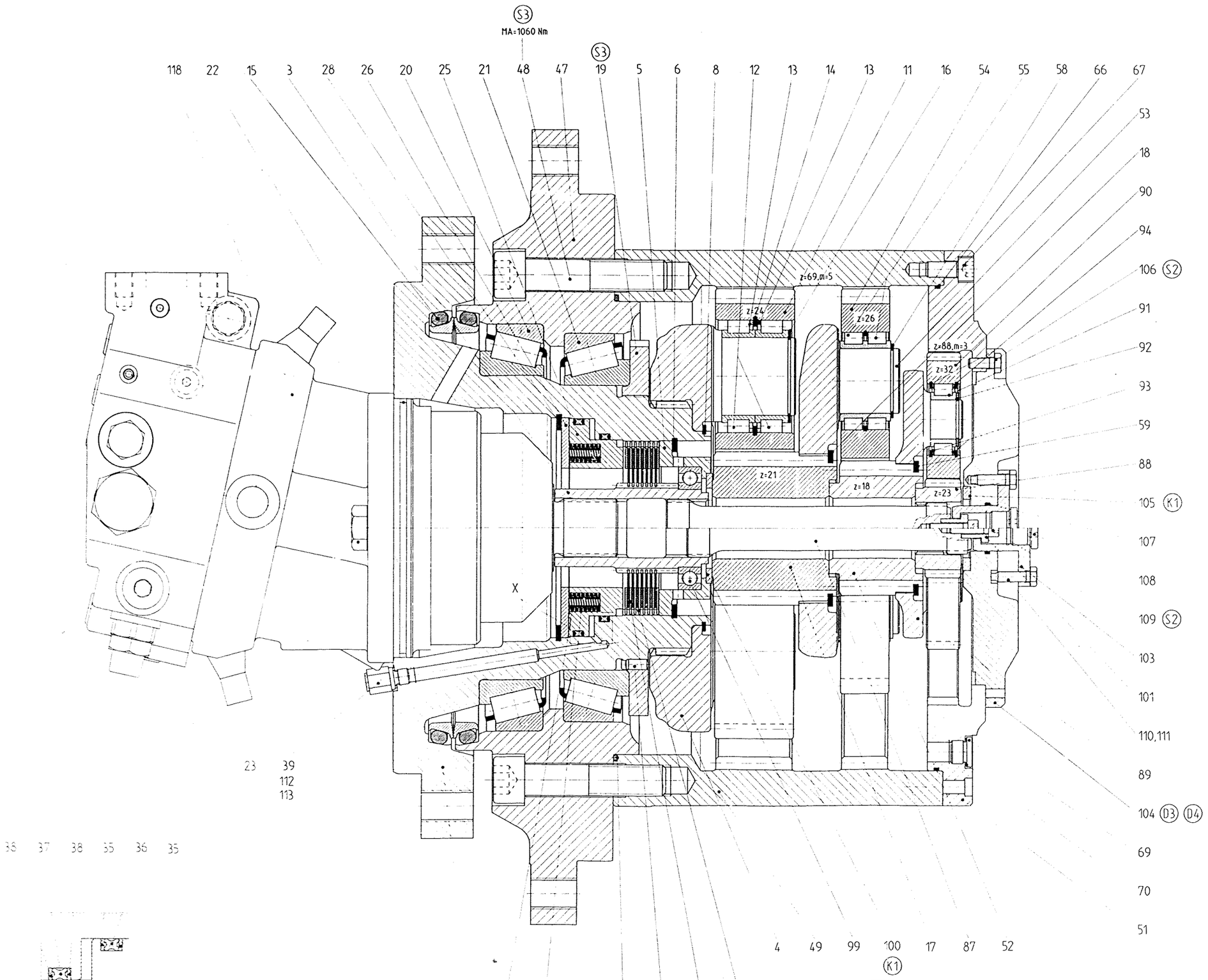

Montageanweisung GFT 80

Einstellen der Kegelrollenlager

- Gewinde an Treibgetriebe (Pos. 1) und Wellenmutter (Pos. 19) entfetten (z.B. mit LOCTITE 7061 oder gleichwertig geeigneten Reiniger).
- Beim Einstellen der Kegelrollenlager ist das Ritzel mehrfach in eine Richtung zu drehen!
- LOCTITE 638 gleichmäßig auf das Gewinde der Wellenmutter (Pos. 19) auftragen!
- Anziehmoment: 7500 Nm
  Die anschließende Aushärtezeit beträgt 24 Stunden bei Raumtemperatur.

Planetenräder

- Nur Planetenradsätze mit max. 0,02 mm Zahnweiten-Differenz verwenden.

Axialspiel

- Spiel zwischen Anlauffläche Ritzel (Pos. 88) und Scheibe (Pos. 105): = 1-2 mm, bei Montage überprüfen!

Lamellenbremse (nur bei Ausführung mit Bremse)

- Federn, Dichtelemente und die Gegenflächen der Dichtelemente sind für die Montage leicht einzuölen.
- Bevor die Quadringe montiert werden, müssen beide Stützringe eingebaut sein.

Mounting Instructions

Setting of Tapered Roller Bearings

- Degrease threads on spindle (item 1) and shaft nut (item 19) with i.e. LOCTITE 7061 or a similar product.
- Rotate the ring gear in one direction only during the setting of the tapered roller bearings.
- Apply LOCTITE 638 to shaft nut thread (item 19) evenly.
- Shaft nut tightening torque: 7500 Nm (5531 ft.lbs.)
- The LOCTITE setting time equals 24 hours at room temperature.

Planet Gears

- Use only planet gears within a span measurement variation of 0.02 mm.

Axial Clearance

- Clearance between the contact surfaces of pinion (item 88) and thrust washer (item 105) = 1-2 mm, check at assembly!

Multiple Disk Brake (only for brake design)

- Lubricate springs, piston seals and back-up rings as well as their contact areas lightly with gear oil.
- Assemble the back-up rings prior to the piston seals.

Motor: A6VE 160HZ3/63W-VZL2228

i: 99

S2	=	mit LOCTITE 270 gesichert secured with LOCTITE 270
S3	=	mit LOCTITE 638 gesichert secured with LOCTITE 638
D2	=	mit LOCTITE 586 gedichtet sealed with LOCTITE 586
D3/D4	=	mit LOCTITE 573/574 gedichtet sealed with LOCTITE 573/574
K1	=	mit LOCTITE 640 geklebt glued on with LOCTITE 640
K2	=	mit LOCTITE 480 geklebt glued on with LOCTITE 480

Standard - Anziehdrehmomente M_A in Nm für ungeschmierte Schaftschrauben (μ_G = 0,13 bis 0,17) mit Regelgewinde ohne zusätzliche Einzelangaben (s. LSN 945 0201)

Standard - tightening torques M_A in Nm for unlubricated shoulder stud (μ_G = 0,13 to 0,17) with standard thread without additional details (LSN 945 0201)

Schraube screw		M 8	M 10	M 12	M 14	M 16	M 20	M 24	M 27	M 30	M 33	M 36	M 39	M 42	M 48
8.8	Dr.	21,1	42,2	73,6	114,8	176,6	358	618	903	1216	1647	2129	2757	3394	5150
	Schl.	19,6	39,2	67,7	107,9	166,8	334	569	844	1138	1540	1972	2570	3149	4787
10.9	Dr.	30,4	60,8	104	166,8	255,1	510	873	1285	1736	2354	3021	3924	4836	7328
	Schl.	28	55,9	97,1	155	235,4	471	814	1197	1619	2197	2815	3659	4493	6816

Dr. = Drehmomentschlüssel (torque wrench)
Schl. = Schlagschrauber (shock screwer)

Anziehen mit Loctite: gleiche Anziehmomente
tighten with loctite: same tightening torques

Nr	Änderung	Tag	Name

Datum: 26.03.98
Name: Wolter

Benennung: GFT 80 T3 9229
Fahrgetriebe

Maßstab: 1:1

Zeichnungs-Nr.: 0/61bbz/1229/0

CAD

Anlage 2:

Beschreibung des Versuchsprogrammes

L+S Claim No: n/a

Service Report

June 21, 1999

Customer :	CAT-NEXUS-SERVICE	**L+S Part Number :**	GFT 080T3.9229
Customer Claim Number :	RISLEY TESTING	**L+S Serial Number :**	3146
Customer Purchase Order :	TK 1100 TEST	**L+S Order Number :**	3 1948
Customer Part Number :	149-3816	**L+S Invoice Date :**	January 19, 1998

LVT- Dr. Berger 5/6

Description of Inspection :

The drive tested on June 15, 1999 was on the left side. The drive on the right side of the machine was from L+S Order No. 3 1948, serial no. 3147.

Th test was set-up to measure reverse travel pressure on Channel 0 (1000 bar transducer), forward travel pressure on Channel 1 (1000 bar transducer), shift control pressure on Channel 2 (100 bar transducer), and speed sensor on Channel 3 (16 impulses per ring gear revolution).

The ambient outside temperature was 75 to 80 degrees F. Easy Log temperature recorders were mounted on the hydraulic motor housing (hyd. motor temp) and in a screw plug located in the end cover (lube oil temp). The EasyLog recorders were started before the machine went to work, and they were removed after the machine shut down.

Before the hydraulic connections were made and before the machine was started, a 1 minute baseline calibration was recorded on the DAT tape. All hydraulic connections were made and the machine was started for testing. At the end of the test, the hydraulic connections were opened and another 1 minute baseline was recorded with the machine shut down.

The DAT recorder, chart printer, Easy Log recorders, and video camera were set at the same time basis - Central Time Zone (Chicago time).

The test consisted of travel through woods to work area, normal working, and travel from woods on DAT tape #1. DAT tape #2 contains test data from 0.3 mm orifice and 0.45 mm orifice shifting tests (auto shift/manual shift), track stalling against stump, and high speed travel on dirt road to location where the machine was shut down. Machine modes (working/travel) have been noted on the printed chart papers.

Ein S. 0/6156/5229/0
0/6156/122910

L+S Claim No: n/a

Service Report

June 21, 1999

Customer :	CAT-NEXUS-SERVICE	**L+S Part Number :**	GFT 080T3.9229
Customer Claim Number :	RISLEY TESTING	**L+S Serial Number :**	3146
Customer Purchase Order :	TK 1100 TEST	**L+S Order Number :**	3 1948
Customer Part Number :	149-3816	**L+S Invoice Date :**	January 19, 1998

LVT - Dr Berger 6/6

Description of Inspection :

After the test, a lube oil sample was taken from the tested drive. The DAT tapes, chart papers, video tapes, and oil samples were sent to L+S in Germany on June 18, 1999.

In addition to the analysis of the duty cycle data, application details pertaining to Dean Arnoldussen's e-mail dated June 17 need to be addressed.

The MRC-L+S Div. travel and labor expenses for this trip to Risley are to be shared with CIPI.

Dean Arnoldussen 6-21-99

Amount Billed L + S : $.00 --> **Our Invoice Number :** 0

Mannesmann Rexroth Corporation, L+S Division

Anlage 3:

MRC comments to shifting problems

Betreff: RISLEY EQUIPMENT - CANADA TESTING
Datum: Thu, 17 Jun 1999 17:08:08 -0500
Von: "Arnoldussen, Dean - LST" <dean.arnoldussen@lst.rexroth.com>
An: "Moertl, Fritz - LST" <fritz.moertl@lst.rexroth.com>,
"Kirchner, Walter" <Walter.Kirchner@lus.de>, "L+S Service Dept." <service@lus.de>
CC: CIPI-Reed Stuedemann <stuedemann_reed_a@CAT.com>,
"Guilianelli, Robert - LST" <robert.guilianelli@lst.rexroth.com>

On June 15 and June 16 I tested 2 machines at Risley Equipment near Grande Prairie, Alberta, Canada. Reed Studeman from CIPI was present during the testing, and were Wayne Tyndall from Risley Equipment.

The main purpose of the test was to record application duty cycle information for L+S evaluation of the gear drive applications. A separate service report contains the L+S test details, while this report outlines a control situation that Risley had been experiencing on all the TK1100's that they have recently built

The units tested were:

Machine: TK1100
Mach. s/n: ML00101
Machine hours: 2629
Gear Drive: GFT 80T3.9229
L+S Order No. 3 1948 (left side-tested) 3 1948 (right side-not tested)
L+S Serial No. 3146 (left side-tested) 3147 (right side-not tested)
CAT Part No. 149-3816 149-3816
TEST DATE: June 15, 1999

Machine: TK723
Mach. s/n: ZA00110
Machine hours: 59
Gear Drive: GFT 60T3.9224 GFT 60T3.9223 (with A6VE107HZ3/63W-VZU222B-S, LF 106107 installed)
L+S Order No. 3 1703 (left side-not tested) 3 1370 (right side-tested)
L+S Serial No. 4817 (left side-not tested) 4247 (right side-tested)
CAT Part No. 1C7995 1C7993
TEST DATE: June 16, 1999

The purpose of this message is to inform you that Risley is experiencing problems keeping the machine "tracking" straight during the shifting of the propel motors from low speed to high speed. Previously, the MRC-L+S Div. has worked with Risley and CIPI over the telephone to assist them with troubleshooting. The problem is most noted on the TK1100 machines. The following actions have taken place since the problem was first noted late in 1998:

Risley verified sufficient and continuous brake release pressure to the gearbox parking brake. The motor external brake release pressure is sufficient. No brake wear materials have been found in oil analysis.

The problem affects both sides of the machine (without much, if any predictability) even though the motors were changed from left to right and right to left. One motor was even returned to Lake Zurich and then to BHY-NA for testing and internal inspection. No problems were found with the motor.

MRC-L+S Div. supplied some 0.45 mm bi-directional orifices to Risley for testing. They made it sound that these larger orifices made a drastic improvement over the standard 0.3 mm orifice originally supplied in the motors.

During the later part of my testing on the TK1100, we attempted to demonstrate the shifting problem by recording (pressures and speeds) on the data tape, as well as video document the machines actions while the operator was travelling on relatively smooth ground. I do not know if the L+S analysis of the data tape will lead to any conclusions, but we must hope to find an answer to this problem. My witness of the testing found no real improvement when using the 0.45 mm orifice. Other persons who had not seen the problem also admitted that it was worse that described to them previously.

In an effort to solve this problem, we must use the collected data for any insight into what may be occurring at the motors. Whether or not the test data will be sufficient or not remains to be determined. At this time, we must look into application details and consider the following:

a. The L+S/Rexroth drive/motor package replaces at CAT drive/motor package. According to known information, the systems and controls before the hydraulic motor are the same on both set-ups. This should be verified and documented by means of application information, technical data, and schematics for review by both parties (Rexroth & CAT). What differences exist, and how could they affect the system

b. What effects do loading of the drive/motor package have on the shift control characteristics. Since the "hanging-up" of one track randomly switches from side to side of the machine, could external loads be causing the motors to behave erratically when shifting between low and high speed? The problem is not noticed when shifting from high speed to low speed. Also, the problem occurs both when the machine is under the control of CAT's auto shift and when it is manually shifted by the operator. How sensitive are the motors under the existing type of control?

c. Other similar applications use the same L+S/Rexroth concept and control package, with different systems before the hydraulic motor. What differences or similarities are there in other applications that could help solve this problem.

d. Currently, the machine function does not allow for a very predictable machine when it shifts from low to high speed. This problem must be targeted for improvement for the benefit of all involved parties.

Please pass this on to the correct person(s) who can take the necessary action to review and comment on what the next steps will be.

Please feel free to contact me if you have any questions.

Regards,
Dean

This Mail has been checked for Viruses
Attention: Encrypted Mails can NOT be checked !

* * *

Diese Mail wurde auf Viren ueberprueft
Hinweis: Verschluesselte Mails koennen NICHT geprueft werden !

Anlage 4:

Klassierung

Drücke, Drehzahlen, Drehmomente

Datum : 10.08.99

CAT NEXUS SERVICE - Risley Testing, Zusammenfasssung von Tape 1 + Tape 2

norm. Arbeitszyklen, fahren mit hoher Geschwindigkeit, Umschalten des Steuerdrucks (automat. / von Hand), fahren gegen einen Baumstumpf

technische Daten	Antrieb		Abtrieb	
Drehmomentkonstante :	1,00	Nm/bar	99,00	Nm/bar
Nennmoment :	666,00	Nm	65.934,00	Nm
Nenndrehzahl :	3.069,00	1/min	31,00	1/min
Übersetzung :	99,00			
Nenndruck	260,00	bar		

Type :	Risley TK 1100
Getriebe :	GFT 80 T3 9223
Hydromot :	AV6E 160 HZ 3/63
Imp/Umd.	16
Vgmax :	160 cm^3

Zeitanteile			
neagative Klassen :	380,6	Sek.	3,65%
positive Klassen :	3.406,0	Sek.	32,70%
Nullklasse :	6.629,3	Sek.	63,65%
Gesamtzeit	10.415,9	Sek.	100,00%

Moment am Abtrieb [Nm]	mittl. Drehzahl am Abtrieb [1/min]	Zeitanteile in [Sek.]	n/n_{Nenn}	T/T_{Nenn}	t/t_{Gesamt}
-99.000,0	6,15	6,18	0,20	-1,502	1,62%
-85.800,0	11,49	12,23	0,37	-1,301	3,21%
-72.600,0	12,63	16,14	0,41	-1,101	4,24%
-59.400,0	12,85	59,45	0,41	-0,901	15,62%
-46.200,0	11,96	26,69	0,39	-0,701	7,01%
-33.000,0	13,25	74,53	0,43	-0,501	19,58%
-19.800,0	20,79	185,40	0,67	-0,300	48,71%
99.000,0	6,46	48,78	0,21	1,502	1,43%
85.800,0	18,55	41,35	0,60	1,301	1,21%
72.600,0	18,73	47,84	0,60	1,101	1,40%
59.400,0	17,70	95,96	0,57	0,901	2,82%
46.200,0	16,29	128,05	0,53	0,701	3,76%
33.000,0	22,96	589,61	0,74	0,501	17,31%
19.800,0	25,68	2.454,37	0,83	0,300	72,06%
±6.603,3	6,57	6.629,34	0,21	±0,1002	

Datum : 10.08.99

CAT NEXUS SERVICE - Risley Testing, Zusammenfasssung von Tape 1 + Tape 2

norm. Arbeitszyklen, fahren mit hoher Geschwindigkeit, Umschalten des Steuerdrucks (automat. / von Hand), fahren gegen einen Baumstumpf

Zeitanteile in [Sek.]	Drehzahl [1/Min]										
Antriebsmoment [Nm]	4,00	8,00	12,00	16,00	20,00	24,00	28,00	32,00	36,00	40,00	Summe der Zeiten [Sek.]
-1.000,0	3,50	2,07	0,57	0,01	0,02	-	-	-	-	-	6,18
-866,7	3,26	2,33	2,93	1,38	1,13	1,15	0,05	-	-	-	12,23
-733,3	2,12	1,35	7,26	3,51	1,22	0,55	0,13	-	-	-	16,14
-600,0	3,66	2,93	32,74	17,96	1,66	0,39	0,11	-	-	-	59,45
-466,7	4,25	1,83	13,39	5,20	1,20	0,79	0,03	-	-	-	26,69
-333,3	25,44	7,52	6,21	9,74	11,35	7,75	6,52	-	-	-	74,53
-200,0	24,56	5,61	8,56	17,49	31,56	38,28	30,04	29,31	-	-	185,40
±66,7	5.663,28	76,20	69,20	143,70	238,70	154,08	103,44	178,77	1,97	-	6.629,34
200,0	116,64	63,40	60,90	263,30	261,35	165,63	208,48	1.314,59	0,07	-	2.454,37
333,3	24,23	11,56	19,67	66,53	74,61	130,95	243,71	18,35	-	-	589,61
466,7	18,49	3,73	7,02	41,76	37,77	16,29	2,98	0,00	-	-	128,05
600,0	1,93	1,00	8,28	45,03	25,09	12,04	2,59	-	-	-	95,96
733,3	1,43	0,72	2,53	15,94	15,51	9,73	1,98	-	-	-	47,84
866,7	2,31	0,99	3,53	7,27	16,24	10,50	0,52	-	-	-	41,35
1.000,0	37,06	1,87	3,90	3,78	1,87	0,29	-	-	-	-	48,78
Summe :	5.932,16	183,11	246,71	642,61	719,26	548,42	600,59	1.541,02	2,04	-	10.415,92
										Gesamtsumme:	
max.	5.663,28	76,20	69,20	263,30	261,35	165,63	243,71	1.314,59	1,97	-	173,60 Min.